This is a digital copy of a book that was preserved for generations on library shelves before it was carefully scanned by Google as part of a project to make the world's books discoverable online.

It has survived long enough for the copyright to expire and the book to enter the public domain. A public domain book is one that was never subject to copyright or whose legal copyright term has expired. Whether a book is in the public domain may vary country to country. Public domain books are our gateways to the past, representing a wealth of history, culture and knowledge that's often difficult to discover.

Marks, notations and other marginalia present in the original volume will appear in this file - a reminder of this book's long journey from the publisher to a library and finally to you.

Usage guidelines

Google is proud to partner with libraries to digitize public domain materials and make them widely accessible. Public domain books belong to the public and we are merely their custodians. Nevertheless, this work is expensive, so in order to keep providing this resource, we have taken steps to prevent abuse by commercial parties, including placing technical restrictions on automated querying.

We also ask that you:

+ *Make non-commercial use of the files* We designed Google Book Search for use by individuals, and we request that you use these files for personal, non-commercial purposes.
+ *Refrain from automated querying* Do not send automated queries of any sort to Google's system: If you are conducting research on machine translation, optical character recognition or other areas where access to a large amount of text is helpful, please contact us. We encourage the use of public domain materials for these purposes and may be able to help.
+ *Maintain attribution* The Google "watermark" you see on each file is essential for informing people about this project and helping them find additional materials through Google Book Search. Please do not remove it.
+ *Keep it legal* Whatever your use, remember that you are responsible for ensuring that what you are doing is legal. Do not assume that just because we believe a book is in the public domain for users in the United States, that the work is also in the public domain for users in other countries. Whether a book is still in copyright varies from country to country, and we can't offer guidance on whether any specific use of any specific book is allowed. Please do not assume that a book's appearance in Google Book Search means it can be used in any manner anywhere in the world. Copyright infringement liability can be quite severe.

About Google Book Search

Google's mission is to organize the world's information and to make it universally accessible and useful. Google Book Search helps readers discover the world's books while helping authors and publishers reach new audiences. You can search through the full text of this book on the web at `http://books.google.com/`

A 760,963 DUPL

PROPERTY OF
University of Michigan Libraries
1817
ARTES SCIENTIA VERITAS

PROPERTY OF
University of Michigan Libraries
1817
ARTES SCIENTIA VERITAS

THE GASOLINE AUTOMOBILE

Its Design and Construction

VOLUME I

The Gasoline Motor

By
P. M. HELDT
Member, Society of Automotive Engineers

FIFTH EDITION

P. M. HELDT
NYACK, N. Y.
1918

Engin Lib
TL
205
.H47
1918

Copyrighted by
P. M. HELDT,
1916.
Previous Copyrights
1911, 1912 and 1915.

(All Rights Reserved.)

PREFACE TO THE FOURTH EDITION.

SINCE the first appearance of this work, in 1911, such remarkable advances have been made in the design of automobile gasoline engines and in their production that it has been found necessary to largely re-write the text for the present edition. Various branches of the subject have been further elaborated and a new chapter on water-cooling systems has been added. It was the original intention not to incorporate in this volume a treatment of the so-called engine accessories, such as carburetors, ignition appliances, etc., partly because their inclusion would have unduly extended the scope and size of the volume and partly because these accessories almost invariably are designed by specialists and not by car designers, and can, therefore, be treated more handily in separate volumes. In the meantime the subject of electrical equipment has been dealt with in two or three books of a semi-technical character, and a number of technical works on carburetors have also appeared. On the other hand, the cooling system does not lend itself so well to treatment in a separate work, because the various parts of which it is composed are not all the product of one particular industry. The proportioning and general design of the various elements of the cooling system devolve upon the car designer, and a treatment of the subject is, therefore, properly included in this volume, which is addressed to automobile and gasoline motor engineers and those who aspire to membership in these professions.

One difficulty that was met with in preparing this revised edition was the increasing deviation in pleasure car and motor truck engine practice. Of course, the underlying principles of both types of engines are the same, but it has been attempted in this volume to go a little further than merely presenting basic principles, by giving rules and constants of design wherever possible, and to illustrate principles by representative examples. Now that pleasure car engines run at about 2,000 feet piston speed per minute and truck engines at little over one-half this speed, it is difficult to give single examples representative of all classes of automobile engines. If pleasure car engine and truck engine development continue to follow widely divergent lines it

323494

may be found advantageous in the future to deal with each class separately, but in the present volume the author has endeavored to cover the whole subject together as well as possible.

Among the chapters which have been completely re-written for the present edition is that on engine balance. Not only has this subject greatly increased in importance with the remarkable increase in engine speed and the appearance of eight and twelve-cylinder engines, but further study after the publication of the first edition rendered the subject much clearer in the author's mind and permitted of a more systematic treatment. All of the turning moment diagrams for engines with different numbers of cylinders also have been redrawn to correspond to a higher piston speed and less weight of reciprocating parts; in other words, to bring them into better acord with modern pleasure car practice.

Aluminum pistons have been given due consideration in the revision, and some space has been devoted to tubular connecting rods, though the latter at the present moment are not extensively used. Another new addition to the chapter on connecting rods is that relating to forked rods for V engines. The chapter on crankshafts has also been almost completely re-written, this having been made necessary by the changing practice in respect to the size of crankshaft employed in engines of certain cylinder dimensions and the adoption of eight and twelve-cylinder engines in pleasure car practice.

Probably the most important new matter in the present edition is that relating to the mechanics of the various types of cams. The author first saw solutions of the differential equations relating to the speed of lift and acceleration of the valve with tangential cams in an article by George S. Bower in *Internal Combustion Engineering*, London, of October 15, 1913. Since that time, the theory of action of other cam forms has been worked out, with the result that the spring pressure required with any of the commonly used forms of cams of any dimensions and for any weight of reciprocating parts and for any miximum speed can now be accurately calculated.

Owing to the addition of the chapter on cooling and extensions of many other chapters, the new volume is considerably larger than those of the earlier editions, and this, in connection with the heavy expense incident to the extensive revision, made it necessary to slightly increase the price of the volume.

The author wishes to thank those of his readers who have informed him of errors in the earlier editions or made suggestions with a view to improving the work, and he herewith solicits their further kind co-operation.

PREFACE TO THE FIFTH EDITION

IT has not been found necessary to make any important changes in the text for the present edition, which follows the preceding one after an interval of little more than a year. To make this volume uniform with Vol. II, the plates have been incorporated in the book itself, instead of being bound separately. As the cuts are reduced from the same large size drawings as previously, and are printed on coated paper, it is believed that they will prove equally useful as the less handy folding plates.

During the past year the demand for the book has greatly increased, partly owing to the fact that it has been introduced as textbook in quite a number of engineering schools. This has been most gratifying to the author. Though only automobile and truck motors are dealt with directly, engineers in the aircraft, tractor, marine motor and motorcycle fields also have found the book useful in their work.

Owing to the success of the work in the United States and the increasing appreciation of it in Great Britain, it has been decided to print a special British edition. There is no doubt in the author's mind that the present extensive use of the gasoline motor in aircraft, road vehicles and agricultural tractors will lead in Great Britain, as well as in other countries, to a more widespread engineering study of this motor in the future and hence to a greater demand for a work of this nature.

LIST OF CHAPTERS.

CHAPTER I, The Working Media—Gasoline and Air..... 1

CHAPTER II, The Laws of Gases—Thermodynamics..... 10

CHAPTER III, The Otto Cycle 19

CHAPTER IV, Conversion of Reciprocating into Rotary Motion 37

CHAPTER V, Balancing of Engines..... 59

CHAPTER VI, The Cylinder..... 75

CHAPTER VII, Piston, Piston Rings and Piston Pin.....120

CHAPTER VIII, Offset Cylinders.....169

CHAPTER IX, The Crankshaft.....181

CHAPTER X, The Connecting Rod.....215

CHAPTER XI, Valves and Valve Gears.....239

CHAPTER XII, Camshaft and Accessories Drives.....291

CHAPTER XIII, Crank Case and Oiling System.....305

CHAPTER XIV, Starting Crank, Manifolds and Muffler.....356

CHAPTER XV, The Flywheel 373

CHAPTER XVI, Speed Control—The Governor.....393

CHAPTER XVII, Power Output and Other Characteristics.....403

CHAPTER XVIII, Sleeve, Piston and Rotary Valve Motors....425

CHAPTER XIX, The Two Stroke Cycle Motor.....441

CHAPTER XX, Water Cooling.....467

CHAPTER XXI, Air Cooling.....521

CHAPTER XXII, Motor Tests.....529

APPENDIX 565

CHAPTER I.

THE WORKING MEDIA—GASOLINE AND AIR.

The process by which mechanical power is generated in gasoline motors from the chemical potential energy of the gasoline is substantially as follows: Gasoline is mixed with seventeen to eighteen times its weight of atmospheric air, in which it is vaporized. This explosive mixture is introduced into the working cylinders of the motor, where it is ignited and burned to carbonic acid gas and water vapor. The gases thus formed, together with the nitrogen in the air (which does not take part in the combustion), are heated to a high temperature by the heat of combustion of the fuel. In this way their pressure is greatly increased and they act upon the motor pistons, imparting to the pistons a rectilinear motion, which by means of the crank shaft and connecting rods is transformed into rotary motion. Gasoline and air are therefore the working media in a gasoline motor, and before taking up the study of motor mechanism it will be well to acquaint ourselves with the physical properties of these media.

Gasoline is a colorless, mobile and relatively light liquid which is produced from crude petroleum by fractional distillation. According to works on the subject, gasoline is that portion of the crude petroleum which distills at 140° to 158° Fahr. and which has a specific gravity of 0.636 to 0.70. The product distilling at less than 140° Fahr. is known as chymogene, and that distilling above 158° as benzine or naphtha. The latter distillates include all products passing over between 158° and 338° Fahr. At the latter temperature kerosene begins to distil over. In recent years, as the demand for gasoline has increased, the refiners have marketed heavier and heavier products and the greater part of the automobile fuel now used ranges above the higher density limit of the above definition for gasoline.

Gasoline is a mixture of various hydrocarbon compounds, all belonging to the same series, known as the paraffin series. The principal ones of these compounds are:

Pentane, C_5H_{12}
Hexane, C_6H_{14}
Heptane, C_7H_{16}

There are several others, both lighter and heavier than those mentioned, the general chemical formula being

$$C_n H_{2n+2}.$$

The chemical diagram of hexane is shown below:

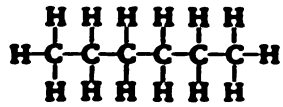

and the diagrams for the other members of this group are quite similar.

The most important physical qualities of gasoline are evidently its

Density or specific gravity.
Coefficient of heat expansion.
Latent heat.
Vapor tension.
Vapor density.
Viscosity.
Calorific or heat value.

The specific gravity is the ratio of the weight of a certain volume of gasoline at 60° Fahr. to the weight of the same volume of water at 39° Fahr.

The coefficient of heat expansion is the proportional increase in volume per degree Fahr. as compared with the volume at 60° Fahr.

The latent heat is the amount of heat required to transform one pound of liquid gasoline into a dry saturated vapor from and at the boiling point.

The vapor tension is perhaps best explained by stating that if gasoline is placed in a closed vessel and heated, the pressure observed while the gasoline is at any particular temperature is the vapor tension corresponding to that temperature. This pressure is counted from zero pressure, or is equal to the gauge pressure plus 14.7 pounds per square inch. The vapor tension is equal to atmospheric pressure, or 14.7 pounds per square inch, at the boiling point of the liquid in the atmosphere.

The vapor density is the ratio of the weight of a certain volume of dry gasoline vapor to the weight of an equal volume of dry atmospheric air at the same pressure and temperature.

The viscosity is that quality which determines the rapidity of

flow of the gasoline through a given size of tubular outlet under a certain head of pressure. The amount of fluid passing through a small tube of a length relatively large in proportion to its bore is inversely proportional to the viscosity.

The calorific or heat value is the amount of heat liberated upon burning the gasoline in an excess of air or oxygen. It is expressed in British thermal units. One British thermal unit is the amount of heat required to raise one pound of water from 39° to 40° Fahr. The British thermal unit is equal to 772 foot pounds. (778.1 according to the most recent determinations.)

It will be understood from the start that since gasoline is not a definite chemical compound, but a mixture of several such compounds in varying proportions, the various properties cannot be given with absolute accuracy. The properties of the constituent compounds are well known, however, and some of them are given in the following table:

Name.	Per Cent. of Carbon.	Per Cent. of Hydrogen.	Boiling Point—Fahr.	Specific Gravity.	Vapor Density.
Pentane	83.20	16.71	87	.640	2.538
Hexane	83.68	16.32	143	.676	3.053
Heptane	83.90	16.04	165	.718	3.547

The different grades of gasoline are usually distinguished by their density. It has already been stated that the specific gravity of gasoline (the ratio of the weight of a certain volume of it to the weight of the same volume of water at 39° Fahr.) varies between 0.636 and 0.700. It is customary, however, to express the density in terms of the Baumé scale, and in order to enable the reader to readily convert Baumé degrees into specific gravities, and vice versa, a conversion table covering that portion of the Baumé scale which can possibly be of use in this connection is given below:

BAUME-SPECIFIC GRAVITY CONVERSION TABLE.

Baumé Degrees.	Specific Gravity.	Baumé Degrees.	Specific Gravity.
56	.755	69	.706
57	.751	70	.702
58	.747	71	.699
59	.743	72	.695
60	.739	73	.692
61	.735	74	.689
62	.731	75	.685
63	.727	76	.682
64	.724	77	.679
65	.720	78	.675
66	.717	79	.672
67	.713	80	.669
68	.709		

The Baumé and specific gravity scales are connected by the following two equations:

$$\text{Deg. B} = \frac{140}{\text{Spec. Gr.}} - 130 \text{ at } 63.5^\circ \text{ Fahr.}$$

$$\text{Spec. Gr.} = \frac{140}{130 - \text{Deg. B}} \text{ at } 63.5^\circ \text{ Fahr.}$$

Since the standard temperature for making density tests of gasoline is 60° Fahr., instead of 63.5°, 0.002 is added to the specific gravity corresponding to any degree Baumé as calculated by means of these equations

The density of gasoline is determined by means of an hydrometer, and the proper temperature at which to make the test is 60° Fahr. The reason for this is that gasoline, like all other substances, expands when heated and contracts when cooled. If, therefore, it is tested at a temperature either much greater or much less than 60°, the reading obtained will be incorrect and a correction factor must be applied. The specific gravity will naturally be less at higher temperatures and greater at lower temperatures. If

d_t = density at t° F.
d_{60} = density at 60° F.

$$d_t = d_{60}\left[1 - a(t - 60)\right].$$

a being the coefficient of expansion. According to tests made by Dr. W. Watson,

$a = 0.00086$ for pentane,
$a = 0.00074$ for hexane,
$a = 0.00055$ for heptane,
$a = 0.0007$ for gasoline (average of nine samples of different density.)

Consequently we may write for ordinary gasoline

$$d_t = d_{60}\left[1 - 0.0007(t - 60)\right]$$

In ordinary commercial practice it is convenient to express the specific gravity of gasoline to two decimal points, and since it usually ranges around 0.72, and the coefficient of expansion 0.0007 is equal to $\frac{1}{1429}$, it takes a variation of temperature of $\frac{\frac{1}{72}}{\frac{1}{1429}} = 20^\circ$ Fahr. (approximately) to effect a change of "one point" in the density or specific gravity of the gasoline.

Gasoline vaporizes readily at ordinary atmospheric pressures and temperatures, and it draws its heat of vaporization from the surrounding air. Little is therefore said, as a rule, regarding its latent heat or heat of vaporization. It is known,

however, that for an average gasoline of 0.70 specific gravity this amounts to 140 British thermal units per pound, as compared with 965.7 British thermal units for water. The specific heat of the liquid gasoline is 0.45.

Gasoline of 76° Baumé has a vapor tension of 2.53 pounds per square inch at 50° Fahr., and for other temperatures this tension may be found by the following adaptation of Rankine's formula:

$$\log t = 5.264 - \frac{1770}{T} - \frac{377,000}{T^2},$$

where t is the vapor tension in pounds per square inch and T the absolute temperature Fahr. The vapor tension at a given temperature is, of course, different for different grades of gasoline.

Gasoline vapor has a high density, and when gasoline is spilled on a floor the vapor from it will remain near the floor and spread rapidly to a considerable distance. The average vapor density is 3.25; that is, at a given temperature and pressure, a unit volume of gasoline vapor weighs 3.25 times as much as a unit volume of air. The density of hexane vapor is three times that of air. The weight of unit volume of atmospheric air at given temperatures will be given later on, and from it the weight of gasoline vapor at different temperatures can be calculated.

Tests to determine the viscosity of various grades of gasoline and the change of the viscosity with the temperature have been made by J. S. G. Thomas and Dr. W. Watson, and their results are given in an appendix to a paper by Dr. Watson on "Thermal and Combustion Efficiency of a Four Cylinder Petrol Motor," which is published by the Incorporated Institution of Automobile Engineers (London). The following data are taken from that paper: The viscosity is expressed in C. G. S. units, but the figures are directly applicable to apparatus constructed according to English measures by means of the following formula: The weight of gasoline of density Δ which will flow in t seconds through a fine tube of diameter d inch and length l inch (l being great compared to r) when driven by a head H inches, is

$$w = \frac{2.21\,\Delta^2 H d^4 t}{l\,\eta} \text{ pounds,}$$

where Δ is the density or specific gravity of the gasoline; H the head in inches; d the diameter of the tube in fractions of an inch; t the time in seconds; l the length of the tube in inches and η the viscosity.

VISCOSITY OF GASOLINE.

Density at 15° C.	Viscosity at 5° C.	Viscosity at 15° C.	Viscosity at 25° C.
0.680*	0.00376	0.00342	0.00319
0.684	0.00380	0.00352	0.00332
0.704	0.00406	0.00380	0.00359
0.707	0.00445	0.00420	0.00398
0.714	0.00431	0.00404	0.00385
0.719	0.00445	0.00420	0.00398
0.720	0.00450	0.00421	0.00400
0.721	0.00454	0.00421	0.00400
0.725	0.00486	0.00454	0.00430

* Hexane.

It will be observed that with a few exceptions the viscosity increases uniformly with the density, and it in every case decreases uniformly as the temperature increases.

The calorific value of gasoline varies slightly with the composition, but for practical purposes sufficient accuracy will be insured by taking it as 19,000 B. T. U. per pound. The lower heating values, as determined by a Junker or similar calorimeter, are somewhat lower, and those of the three simple compounds found in gasoline are as follows (according to Dr. Watson): Pentane, 18,410 B. T. U. per pound; hexane, 18,770; heptane, 18,720. It will then be seen that the differences are very slight, but the differences are appreciable when the heat units per gallon are considered, owing to the difference in specific gravity.

Atmospheric Air—Dry atmospheric air is composed of 77 parts by weight of nitrogen and 23 parts by weight of oxygen. The air is capable of holding in suspension considerable amounts of water vapor, which have the effect of a diluent. In reality the atmosphere contains small quantities of other elements, but they are of no consequence in the operation of a gasoline motor and may be neglected. The oxygen of the air combines with the elements of the fuel to form new compounds, while the nitrogen does not take part in the combustion. It may be stated that at ordinary atmospheric pressure (29.92 inches of mercury) air at a temperature of 32 degrees Fahr. weighs 0.0807 pound per cubic foot. Air expands 1-491 of its volume at 32 degrees Fahr. for every degree Fahr. increase in temperature.

We are now in position to make a calculation of the amount of air required to burn a certain quantity of gasoline. For the sake of simplicity we will assume that this gasoline consists solely of hexane (C_6H_{14}). Since the proportion of hydrogen and carbon in other hydrocarbon compounds is very nearly

the same, and since hexane is the chief constituent of all gasolines of a density near 0.70, this assumption is justified. Carbon has an atomic weight of 12 and hydrogen of 1, hence the proportions by weight of the two elements in gasoline (hexane) are

$$6 \times 12 = 72 \text{ parts of carbon to}$$
$$14 \times 1 = 14 \text{ parts of hydrogen,}$$

or expressing the proportions on a percentage basis,

83.72 per cent. of carbon
16.28 per cent. of hydrogen.

When there is plenty of air mixed with the gasoline, on ignition the carbon of the fuel will combine with the oxygen of the air to form carbon dioxide gas (CO_2) and the hydrogen will combine with the oxygen of the air to form water vapor (H_2O). Remembering that oxygen has an atomic weight of 16, we may write the reactions as follows:

$$12\,C + 32\,O = 44\,CO_2$$
$$2\,H + 16\,O = 18\,H_2O$$

The coefficients in each of these equations show the weight proportions in which the elements combine. Now let us take one pound of gasoline. We then have 0.837 pound carbon and 0.163 pound hydrogen, and by using the proportions given in the above equations we can find the quantities of oxygen required for the combustion of this carbon and hydrogen.

$$0.837\,C + (\tfrac{32}{12})\,0.837\,O = (\tfrac{44}{12})\,0.837\,CO_2$$
$$0.163\,H + (\tfrac{16}{2})\,0.163\,O = (\tfrac{18}{2})\,0.163\,H_2O$$

Carrying out the multiplications we obtain

$$0.837\,C + 2.216\,O = 3.053\,CO_2$$
$$0.163\,H + \underline{1.302\,O} = 1.465\,H_2O$$

Total Oxygen required 3.518

But we saw above that this oxygen is mixed in the atmosphere with nitrogen in the proportion of 23:77; consequently, 3.518 pounds oxygen is mixed with $\frac{77}{23} \times 3.518 = 11.774$ pounds nitrogen or is contained in $\frac{100}{23} \times 3.518 = 15.3$ (approx.) pounds of air. Therefore one pound of gasoline (hexane) theoretically requires 15.3 pounds of atmospheric air for its complete combustion. The process of combustion in the gasoline engine may therefore be written in chemical terms as follows:

$$\underbrace{1 \text{ pound gasoline}}_{0.837\,C + 0.163\,H} + \underbrace{15.3 \text{ pounds air}}_{3.518\,O + 11.774\,N}$$
$$= 3.053\,CO_2 + 1.465\,H_2O + 11.774\,N.$$

Since the mixture of gasoline vapor and air is never perfectly homogeneous it is always advisable to have a slight excess of

air in the mixture, from 18 to 20 times the weight of the gasoline. If insufficient air is present the hydrogen will burn first, and then a portion of the carbon will burn to carbon dioxide (CO_2) and the rest to carbon monoxide (CO). The combustion to carbon monoxide not only gives off a much smaller amount of heat, but carbon monoxide is a very poisonous gas and makes a foul exhaust.

The higher heat value is the amount of heat obtained by burning one pound of gasoline in air and cooling the resulting products down to 60° Fahr. The water vapor in the products of combustion is then condensed and the latent heat or heat of condensation of the water vapor is thus added to the result. The lower heat value is the result obtained by cooling the products of combustion to 212° without condensing the vapor. The theoretical difference between the two heat values can readily be calculated. We have found that in burning one pound of gasoline 1.465 pounds of water vapor is formed. The latent heat of water is 965.7 B. T. U. per pound, and the cooling of the water from 212° to 60° gives a further 152 B. T. U. per pound, making a total of 1,118 B. T. U. Of the other two constituents of the products of combustion, carbon dioxide and nitrogen, the former has a specific heat of 0.216 and the latter of 0.244. The total heat gained in condensing the water vapor and cooling all of the products of combustion of one pound of gasoline from 212° to 60° Fahr. is therefore

H_2O	1.46×1118	$= 1632$
CO_2	$3.05 \times 152 \times 0.216 =$	100
N.	$11.77 \times 152 \times 0.244 =$	436
	Total.....	2,168 B. T. U.

This is the difference between the lower and higher calorific values per pound.

It is evidently the most logical plan, in making calculations of thermal efficiency, to figure with the lower heat value of the fuel, as it is physically impossible to utilize the latent heat of water vapor in a gasoline engine. It is the custom in this country to base calculations on the lower heat value.

The total heat liberated in the combustion of gasoline is the sum of the heats liberated by the combustion of the carbon and the combustion of the hydrogen, minus the heat required to break up the hydrocarbon molecules. In the combustion of carbon to carbon dioxide the heat liberated per pound of the carbon dioxide is 3,860 B. T. U. In the combustion of hydrogen to water vapor the heat liberated per pound of vapor is 5,830 B. T. U. The dissociation of the gasoline or hexane

into hydrogen and carbon requires 420 B. T. U. per pound. If, now, we take the quantities of carbon dioxide and water vapor produced by the combustion of one pound of hexane as found above, we may write the following heat balance:

$$\begin{array}{rcl} 3{,}053 \times 3{,}860 & = & 11{,}784 \\ 1{,}465 \times 5{,}830 & = & 8{,}541 \\ \hline & & 20{,}325 \\ & & -420 \\ \hline & & 19{,}905 \end{array}$$

This result, 19,905 B. T. U. per pound of gasoline, is slightly higher than the best experimental results.

Gasoline mixtures containing the relative proportions of constituents required for complete combustion are readily ignited by an electric spark. When the proportions of gasoline and air vary much from this standard either way it becomes more difficult to ignite the mixture. Greater heat is required to effect the ignition, and once ignited the charge burns more slowly. The limiting proportions for which ignition is still possible at atmospheric pressure are about 1:7 (rich mixture) and 1:32 (lean mixture).

CHAPTER II.

THE LAWS OF GASES—THERMODYNAMICS.

Heat is a form of energy and is convertible into other forms of energy, which in turn are convertible into it. Energy is defined as the capacity for performing mechanical work. Experiments conducted by Helmholtz, Joule and Mayer during the past century proved that energy is indestructible; it can be converted from one form into another and reconverted any number of times, but the total amount of it never changes. The most familiar form of energy is mechanical energy, which is measured in foot-pounds. One foot-pound is the energy expended in raising one pound of matter one foot against the force of gravity. Heat energy is measured in British thermal units. The B. T. U., as already stated, is that amount of heat which is required to raise one pound of water from 39 to 40 degrees Fahrenheit. Joule's experiments showed that

$$1\ B.\ T.\ U. = 772\ \textit{foot-pounds},$$

and the figure 772 is known as Joule's equivalent or the mechanical equivalent of heat. It is represented in mathematical discussions by the letter J.

There are two broad principles underlying the conversion of heat into mechanical energy and the reciprocal process, known respectively as the first and the second law of thermodynamics. They may be stated as follows:

First Law of Thermodynamics: When work is done by the expenditure of heat, the quantity of heat consumed is a measure of the quantity of work done, or of the energy acquired in a new form; and conversely, if work is converted into heat energy the conversion takes place in a definite ratio.

Second Law of Thermodynamics: If the total actual heat of a homogeneous and uniformly hot substance be conceived to be divided into any number of equal parts, the effects of these parts in causing work to be performed are equal (Rankine).

into hydrogen and carbon requires 420 B. T. U. per pound. If, now, we take the quantities of carbon dioxide and water vapor produced by the combustion of one pound of hexane as found above, we may write the following heat balance:

$$\begin{array}{rcl} 3{,}053 \times 3{,}860 & = & 11{,}784 \\ 1{,}465 \times 5{,}830 & = & 8{,}541 \\ \hline & & 20{,}325 \\ & & -420 \\ \hline & & 19{,}905 \end{array}$$

This result, 19,905 B. T. U. per pound of gasoline, is slightly higher than the best experimental results.

Gasoline mixtures containing the relative proportions of constituents required for complete combustion are readily ignited by an electric spark. When the proportions of gasoline and air vary much from this standard either way it becomes more difficult to ignite the mixture. Greater heat is required to effect the ignition, and once ignited the charge burns more slowly. The limiting proportions for which ignition is still possible at atmospheric pressure are about 1:7 (rich mixture) and 1:32 (lean mixture).

called absolute temperatures. The above relationship in its most general form is known as Charles' law and is expressed mathematically as follows:

$$\frac{PV}{T} = Constant,$$

P being the absolute pressure; V, the volume, and T the absolute temperature.

Specific Heats—The amount of heat required to raise the temperature of any substance by one degree Fahrenheit depends upon what is known as its specific heat. It has already been pointed out that it requires one British thermal unit to raise one pound of water from 39 to 40 degrees Fahrenheit, and water is considered to have a specific heat of unity; hence the specific heat of other substances is equal to the amount of heat expressed in British thermal units required to raise the temperature of one pound of these substances one degree Fahrenheit. In the case of gases, however, it makes a difference whether the rise in temperature is accompanied by a rise in the pressure of the gas or by an increase in the volume. If the gas is heated at constant volume, the heat in British thermal units required to raise one pound 1 degree Fahrenheit is known as the specific heat at constant volume (C_v), while if the gas is heated at constant pressure the heat in thermal units required to increase the temperature 1 degree Fahrenheit is known as the specific heat at constant pressure (C_p). The specific heat of air at constant volume has been found by experiment (Regnault) to be 0.169. From this we can calculate the specific heat of air at constant pressure as follows:

Consider a cylinder of such a bore that its cross section measures just one square foot. A piston rests in this cylinder with its head exactly one foot from the cylinder head. The space back of the piston measures then exactly one cubic foot, and we will consider this space filled with air at atmospheric pressure and at a temperature of 62° Fahr., or 523° absolute. We will assume that the piston has an air-tight fit in the cylinder, but can move in it without friction.

Now let heat be applied to the air confined in the cylinder, and its temperature thereby be raised. As the temperature rises the pressure of the air tends to rise, but we have assumed that the piston moves in the cylinder without friction; and, since its outer face is subjected only to atmospheric pressure, immediately the pressure of the confined air rises above atmospheric pressure the piston moves outward, thus keeping the pressure within down

so that

$$V^{\gamma} = \left(\frac{TR}{P}\right)^{\gamma};$$

and multiplying both sides by P,

$$PV^{\gamma} = P\left(\frac{TR}{P}\right)^{\gamma} = Constant$$

from which it follows that

$$\frac{T^{\gamma}}{P^{\gamma-1}} = Constant \qquad (6)$$

Summarizing, for adiabatic expansion or compression of gas the following three equations hold:

$$PV^{\gamma} = Constant;$$

$$TV^{\gamma-1} = Constant;$$

$$\frac{T^{\gamma}}{P^{\gamma-1}} = Constant.$$

The following table gives the values of C_p, C_v and γ for the different gases involved in gasoline motor work:

Gas.	C_p	C_v	γ
Air	0.2375	0.1684	1.408
Oxygen	0.2175	0.1551	1.370
Nitrogen	0.2438	0.1727	1.412
Hydrogen	3.409	2.4110	1.414
Carbon monoxide	0.2450	0.1736	1.411
Carbon dioxide	0.2869	0.172	1.668
Steam	0.4805	0.370	1.298

Temperature of Gasoline Combustion—We found that one pound of gasoline in burning evolves approximately 19,000 B. T. U. This heat energy in a gasoline motor as now commonly used is applied to the gas at constant volume, and all of it therefore goes to raise the temperature of the gas. The three constituents of the gases in the cylinder after the charge has been burned are nitrogen, carbon dioxide and water vapor, and considering the proportions in which they are present and the specific heat at constant volume of each, we should expect the specific heat of the products as a whole to be about 0.20. Assuming that one part of gasoline vapor is mixed with 20 parts of air, we should expect a rise in temperature on combustion of

$$\frac{19{,}000}{21 \times 0.20} = 4{,}500^{\circ}\ Fahr.\ (appr.).$$

In reality the temperature never exceeds 3,000 degrees Fahrenheit. Various reasons have been advanced in explanation of this discrepancy between theory and practice. The first and most plausible explanation is that the specific heat of gases, instead

of being constant, increases with the temperature. This subject has been experimentally investigated by Mallard and Le Chatelier. From the results of their experiments it is found that there is a linear relation between the specific heat at constant volume and the temperature of the gas, and that the specific heats may be represented by the following equations:

$$\text{For } CO_2,\ C_v = 0.1408 + 0.0000463\ T;$$
$$\text{For } H_2O,\ C_v = 0.279 + 0.0001011\ T;$$
$$\text{For } N_2,\ C_v = 0.171 + 0.0000120\ T;$$
$$\text{For } O_2,\ C_v = 0.150 + 0.0000104\ T.$$

In these T is the regular Fahrenheit temperature and C_v the average specific heat up to the temperature T. It will be noted that the temperature coefficient for those gases which have the lowest temperature of liquefaction (N_2 and O_2) are the lowest; in other words, for these gases the specific heat is most nearly constant. If we determine the temperature of combustion by making use of the foregoing specific heats, the result is still about 3,700 degrees Fahrenheit, and the increase in the specific heats at high temperature, therefore, does not fully explain the discrepancy between calculated and observed results.

Other explanations are that the cooling effect of the walls prevents the gas from attaining the calculated temperature, that compounds formed by the combustion, viz., carbonic acid gas and water vapor, become dissociated at high temperatures, whereby heat energy is absorbed, and that the chemical reactions are not yet terminated at the moment the maximum temperature is reached, so that this temperature does not depend upon the total heat of combustion of all of the gas. This latter theory is referred to as that of "after burning." The fact that the pressure and temperature of explosion are higher in a motor with hemispherical combustion chamber than in a motor with valve pockets on opposite sides proves that the cooling influence of the walls and "after burning" affect the temperature of explosion.

CHAPTER III.

THE OTTO CYCLE.

The great majority of automobile motors are operated on what is known as the Otto or four-stroke cycle. By a cycle is meant the succession of operations in a cylinder with a single charge of explosive mixture. The Otto or four-stroke cycle comprises the following four operations, succeeding one another in the order given:

Admission of the charge to the cylinder.

Compression of the charge.

Combustion of the charge (which includes its ignition and expansion).

Exhaustion of the products of combustion.

Each of these four operations occupies the time of one piston stroke. This cycle was originally proposed by Beau de Rochas, a Frenchman, who in 1862 took out a French patent on an engine employing it. Its first practical application, however, is due to Dr. N. A. Otto, a German engineer, who in 1876 patented, and in 1878 exhibited at the World's Fair in Paris the first four-stroke cycle engine of the general type in common use today.

Admission—The first stroke of the Otto cycle is known as the admission or intake stroke. The piston then moves outward in the cylinder, thereby creating a rarefaction of the air or gas in the outer or working end of the cylinder (generally known as the combustion chamber). At some point in the wall of the combustion chamber is located a valve which, at the proper time, places the combustion chamber in communication with the source of combustible mixture, the carburetor. During the admission stroke there is, as we have seen, a rarefaction of the gas in the combustion chamber; in other words, a partial vacuum, so that the pressure on the admission valve from the inside at this time is less than atmospheric pressure; and since the atmosphere presses against the valve from the outside it is possible to open the valve by means of this difference in pres-

FIG. 1.—ADMISSION.

sure on its two sides, that is, by the suction effect.

At the end of the inlet stroke the suction ceases, and a light spring will suffice then to close the valve. This type of inlet valve, known as the automatic inlet valve, was very extensively used at one time, but it has now been discarded for automobile work, because it is noisy in operation and because it closes too early when the motor runs slowly, and too late when the motor runs very fast, thus making it impossible to get full charges into the cylinder under these conditions. By a full charge is meant a volume of charge equal to the piston displacement volume at atmospheric pressure and temperature At present a type of valve is generally used which is positively opened by mechanical connection with the motor crankshaft, and also positively closed. This valve begins to open a little after the beginning of the admission stroke and closes a little after the admission stroke has been completed.

When the motor is rotating at low speed the degree of vacuum or suction in the cylinder during the admission stroke will be very small, and it will, under any conditions, be the smaller the greater the cross section of the inlet ports and passages in proportion to the cross section of the cylinder. The least reduction in the density of the gas inside the combustion chamber will immediately create an inflow of combustible mixture, which will all but fill the vacuum. At high engine speeds, however, there is considerable resistance to the flow of the gaseous mixture through the carburetor, inlet pipe and valve ports, and the cylinder then receives considerably less than a full charge.

Compression—Shortly after the completion of the inlet stroke, the inlet valve is closed, and during the rest of the return stroke of the piston the charge is compressed in the combustion chamber. When the piston has reached the end of its return stroke—the compression stroke—the gas is compressed into from one-third to one-fifth or less of the volume it occupied at the beginning of the stroke. The space which it then occupies is known as the compression space. The object of compressing the charge previous to ignition is as follows:

FIG. 2.—COMPRESSION.

Upon ignition the whole charge is immediately brought to a high temperature and a high pressure. By reason of its pressure the gas acts on the piston and thus converts heat energy into mechanical energy. However, owing to the contact of the highly heated gases with the relatively cool walls of the combustion chamber, heat is lost rapidly. This loss of heat, of course, represents a loss of energy, as the gases on cooling decrease in pressure and in their capacity for performing mechanical work. Other things being equal, this loss of heat is directly proportional to the area of the cooling surface with which a given quantity of charge is in contact. By compressing the charge before ignition the area of the surface with which it is in contact during ignition and expansion is lessened, and the heat losses are reduced. An engine in which the charge is compressed previous to ignition is, therefore, more efficient, transforming a greater percentage of the heat energy of the fuel into mechanical energy. Besides this, the working pressure is greater, and an engine of given size will have a much greater output when working with compression of the charge than when firing the charge at atmospheric pressure. In brief, compression increases the fuel efficiency and reduces the weight and bulk of the engine.

Ignition and Combustion—At or near the end of the compression stroke an electric spark is produced in the compression chamber which ignites the charge. If ignition of the whole charge took place instantaneously the end of the stroke would be the proper time for the spark to occur. It has been shown, however, that it takes some time for the flame to be propagated through the charge, and for this reason when the motor is running at relatively high speed the spark must occur slightly before the dead centre for the best results.

Upon ignition the pressure suddenly rises to between four and five times what it was previously, and the piston is forced out under this pressure. The pressure multiplication factor varies with the composition of the charge, the form of the compression chamber and other variables. The actual pressure in a gasoline

FIG. 3.—EXPANSION.

motor upon ignition is generally between 250 and 350 pounds per square inch, when the motor works at full power. The pressure drops, however, very rapidly, owing both to the increase in the volume of the gases as the piston moves outward and to the abstraction of heat from the gases by the cylinder walls. When the power stroke is almost completed the exhaust valve begins to open and the spent gases, which are still under about 50 pounds pressure per square inch, escape rapidly.

Exhaust—The exhaustion of the burnt gases continues all through the following return stroke of the piston, the exhaust valve remaining open throughout this stroke. During the first part of the exhaust period the gases are forced out by their proper pressure, which causes them to expand when no longer confined, but during the last portion of this stroke the piston practically sweeps the gases before it and pushes them out of the cylinder. The piston, however, does not sweep through the whole of the cylinder space and cannot, therefore, clear the compression space of spent gases. This space remains always filled with the product of the previous combustion, and is for this reason also known as the dead space, or clearance space. At the end of the exhaust stroke, or slightly later, the exhaust valve closes, and at about the same time the inlet valve opens again and the cycle starts anew. In the sketch, Fig. 5, is represented a cylinder of a gasoline engine with its piston in place. Into the piston head is secured a pipe leading to a device known as an indicator. This consists of a cylinder with a piston in it, with a coiled spring

FIG. 4.—EXHAUST.

on top which tends to force the piston down to the bottom of the cylinder. The piston rod extends through the head of the cylinder and connects to a set of four links, joined so as to form a parallelogram. One member of this linkage is extended downwardly and is pivoted at its lower end to a fixed bracket. The top member is also extended and carries at its outer end a pencil which is lightly pressed against a paper card carried on a frame on top of the cylinder.

The indicator cylinder is always in direct communication with the motor cylinder, and the same gaseous pressure that

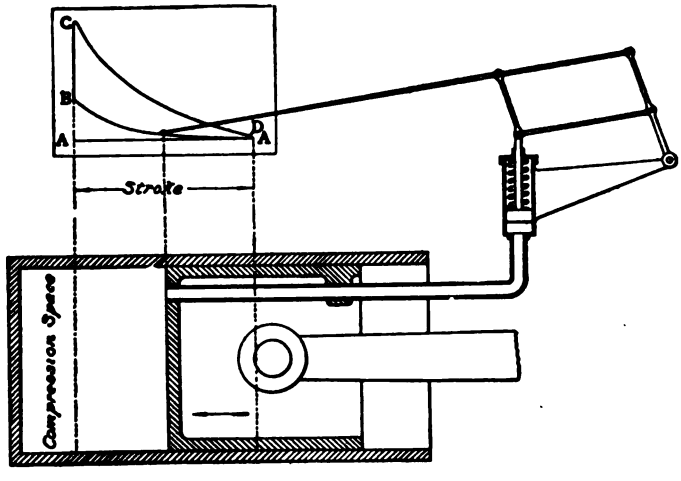

FIG. 5.

acts on the motor piston acts on the indicator piston. The indicator piston will thereby be forced upward against the pressure of the spring. It is a law of coiled compression springs that when subjected to pressure they compress a distance which is directly proportional to the pressure. Hence, at any point in the stroke of the motor piston the indicator piston will be moved up in its cylinder a distance directly proportional to the pressure in the motor cylinder. The pencil will be moved a vertical distance directly proportional to the motion of the indicator piston, and hence the vertical height of the pencil is

always a measure of the pressure acting in the motor cylinder. The pencil is also moved horizontally back and forth, owing to the fact that it is carried by the motor piston, and its horizontal position, therefore, always corresponds to the position of the motor piston head; in other words, to the point in the stroke.

If the motor piston is moved back and forth in the cylinder while the valves are held open, the pressure in the cylinder will remain atmospheric, and the pencil will describe a straight horizontal line *A A*, known as the atmospheric line. If, however, the motor performs its regular cycle and the inlet valve closes at the end of the inlet stroke, then during the following return stroke the gas will be compressed and the pencil will describe curve *A B*, known as the compression curve. At the end of this stroke the charge is ignited and the pressure in the cylinder suddenly rises, in consequence of which the pencil describes a vertical or nearly vertical line *B, C*. Then, as the piston performs the next or power stroke, the pressure in the cylinder falls, first rapidly and then gradually more slowly, as indicated by the curved line *C D*, which is known as the expansion curve. At the end of the power stroke, as the exhaust valve is opened, the pressure drops suddenly to almost atmospheric, as indicated by the short vertical line *DA*.

These various straight and curved lines form together what is known as an engine diagram, which gives an accurate picture of what is going on inside the motor cylinder. Such a diagram cannot actually be taken from an automobile engine by the apparatus here shown, as the inertia of the moving parts would interfere with the results, but the sketch serves very well to explain what is meant by an indicator diagram.

Compression Calculation—At the present time it is customary to work at from 75 to 90 pounds compression absolute. The higher the compression the greater the power obtained from a motor of given cylinder dimensions, and the higher the fuel economy, but when the compression exceeds a certain limit there is danger of trouble from overheating of the cylinder, self-ignition (ill-timed) due to the heat of the compression, and knocking in the bearings. Some years ago automobile motors were frequently built with compressions as high as 100 pounds per square inch, but lower compressions were found advantageous.

The compression of the charge approximates an adiabatic compression, the expression for which, as we have seen, is

$$PV^{\gamma} = Constant.$$

If P_1 be the pressure in the cylinder when the compression stroke begins; V_1, the volume occupied by the gases at the beginning of the compression stroke (volume swept through by piston plus compression space volume); P_2, the pressure at the completion of the compression stroke and V_2 the volume occupied by the gases at the completion of that stroke (compression space volume), then, evidently,

$$P_1 V_1^{\gamma} = P_2 V_2^{\gamma} = Constant.$$

From which it follows that the compression pressure

$$P_2 = P_1 \left(\frac{V_1}{V_2}\right)^{\gamma}$$

The initial pressure P_1 varies with the piston speed, the relative size and form of the passages, and with other factors. At low engine speeds it is generally very close to atmospheric pressure or 14.7 pounds per square inch, while at normal engine speeds this pressure is not more than from 12 to 13 pounds per square inch. The ratio $\frac{V_1}{V_2}$ is known as the compression ratio. As regards the value of the exponent γ, this has been determined from actual indicator diagrams and has been found to be 1.3 approximately. Assuming, for example, an initial pressure of 13 pounds per square inch and a compression ratio of 4 to 1, we find the compression pressure to be

$$13 \times 4^{1.3} = 78.8 \textit{ pounds absolute.}$$

Chart I herewith instantly gives the compression pressure for any initial pressure from 12 to 15 pounds per square inch, and any compression ratio from 3 to 5.

It is obvious that the compression pressure of an engine of given construction is not fixed but varies with the speed, since the speed affects the degree of filling, and, hence, the initial pressure. In giving the specifications of an engine it is better, therefore, to give the compression ratio—the ratio of the volume of piston sweep plus the compression volume, to the compression volume—as this is fixed.

Work of Compression—The compression of the charge in the compression chamber requires the expenditure of a certain amount of work. Let

b = Cylinder bore in inches;
l = Length of stroke;
r = Ratio of compression.

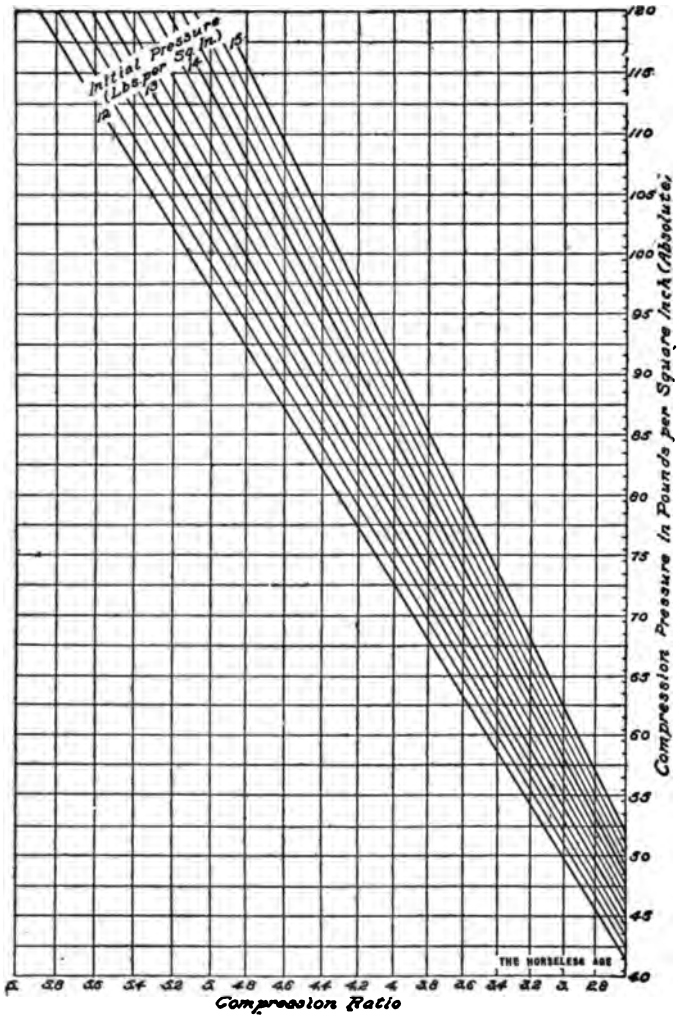
Initial Pressure (Lbs. per Sq. In.)
12
13
14
15
Compression Pressure in Pounds per Square Inch (Absolute)
120
115
110
105
100
95
90
85
80
75
70
65
60
55
50
45
40
6.
5.8
5.6
5.4
5.2
5.
4.8
4.6
4.4
4.2
4.
3.8
3.6
3.4
3.2
3.
2.8
Compression Ratio
THE HORSELESS AGE

CHART I.

Then, considering the compression space in the form of an extension of the cylinder, its height will be

$$\frac{l}{r-1}.$$

The length from the cylinder head to the piston head when the latter is at the beginning of the compression stroke is

$$l+\frac{l}{r-1}=\frac{rl}{r-1}.$$

Suppose that at the beginning of the compression stroke the pressure in the cylinder is P_1. The total pressure against the piston from the inside of the cylinder then is

$$\frac{\pi b^2 P_1}{4}.$$

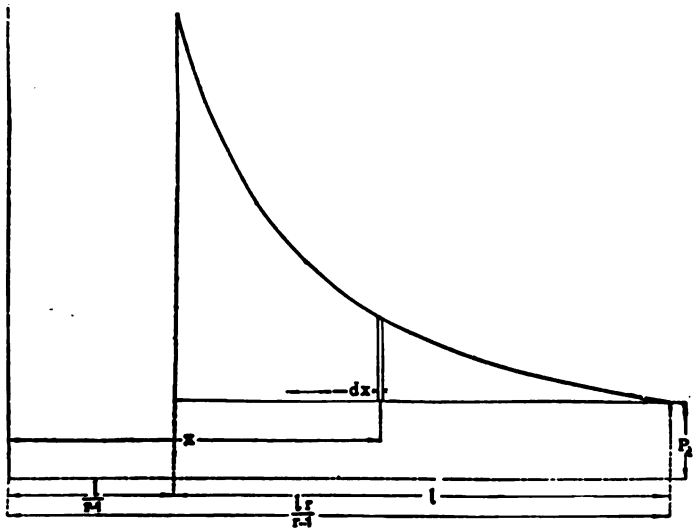

FIG. 6.—COMPRESSION CURVE.

Now consider the piston to be at a distance x from the cylinder head. The internal pressure then is

$$P_1\left(\frac{rl}{\underline{r-1}}\right)^{1.3}=P_1\left(\frac{rl}{r-1}\right)^{1.3}x^{-1.3}.$$
$$x$$

If the piston is now moved an infinitesimal distance $-dx$ to the left against this pressure, the work done will be

$$dW_c=-\frac{\pi b^2}{4}\times P_1\left(\frac{rl}{r-1}\right)^{1.3}x^{-1.3}dx.$$

This is a differential equation of the form

$$dy = a x^m \, dx,$$

the integral of which is

$$y = a \frac{x^{m+1}}{m+1} + \textit{Constant}.$$

However, since we integrate in this case between limits, the constant vanishes. The limiting values of x are

$$\frac{l}{r-1} \text{ and } \frac{r l}{r-1}.$$

Hence

$$\int_{r^{1/(r-1)}}^{l/(r-1)} -\frac{\pi b^2}{4} P_1 \left(\frac{r l}{r-1}\right)^{1.3} x^{-1.3} \, dx =$$

$$\frac{\pi b^2}{4} P_1 \left(\frac{r l}{r-1}\right)^{1.3} \frac{1}{0.3} \left[\left(\frac{l}{r-1}\right)^{-0.3} - \left(\frac{r l}{r-1}\right)^{-0.3} \right] \ldots\ldots (9)$$

Since

$$\left(\frac{r l}{r-1}\right)^{1.3} \left(\frac{r l}{r-1}\right)^{-0.3} = \frac{r l}{r-1},$$

multiplying the part outside the square brackets by

$$\left(\frac{r l}{r-1}\right)^{-0.3},$$

and dividing the part inside the brackets by the same expression, we have

$$W_c = \frac{\pi b^2}{4} \frac{P_1}{0.3} \left(\frac{r l}{r-1}\right) \left[\left(\frac{1}{r}\right)^{-0.3} - 1 \right],$$

which may be simplified to

$$W_c = \frac{\pi b^2 P_1}{1.2} \left(\frac{r l}{r-1}\right) \left(r^{0.3} - 1\right).$$

This equation gives the result in inch-pounds, if the pressure P_1 is given in pounds per square inch and b and l are given in inches. In order to get it in the more usual foot-pounds, we divide by 12, which gives

$$W_c = \frac{\pi b^2 P_1}{14.4} \left(\frac{r l}{r-1}\right) \left(r^{0.3} - 1\right) \textit{ foot-pounds} \ldots\ldots\ldots\ldots\ldots (10)$$

This, of course, does not take account of the fact that the atmosphere presses with a pressure of 14.7 pounds per square inch against the outside of the piston, and thus helps to compress the gas. The amount of work given by the equation would be re-

quired to compress the charge if the cylinder were placed in a vacuum. It is permissible to neglect the effect of the atmospheric pressure, because the energy thus derived during the compression stroke must be expended again during the following expansion stroke. However, if it is desired to determine the net work of compression, this can easily be done by subtracting from the result of equation (10) the energy derived from the atmosphere during the compression stroke, which is

$$\frac{\pi b^2 l \, 14.7}{4 \times 12} \textit{ foot-pounds.}$$

Work of Expansion—If after the completion of the compression stroke the charge is allowed to expand again, the work done by the expansion will be the same as that expended in compressing the charge. Equation (10) would therefore apply to the expansion as well as to the compression if the gas were expanded in the same state in which it was compressed. However, at the end of the compression stroke the charge is burned, whereby its pressure is multiplied several times. Calling this pressure ratio a, we may write for the work of expansion:

$$W_e = \frac{\pi b^2 a P_1}{14.4} \left(\frac{r l}{r-1}\right) \left(r^{0.3} - 1\right) \textit{ foot-pounds.}$$

The difference between the work of expansion and the work of compression is evidently the useful work of one cycle (neglecting the slight loss due to suction and exhaust back pressure). This useful work of one cycle is:

$$W_u = \frac{\pi b^2 l P_1}{14.4} \left(a - 1\right) \left(\frac{r}{r-1}\right) \left(r^{0.3} - 1\right) \textit{ foot-pounds} \ldots (11)$$

This equation clearly shows the effect of the compression ratio r on the work per cycle, and consequently the variation of the output of an engine at constant speed with varying compression. For $r = 3$ the expression

$$\left(\frac{r}{r-1}\right) \left(r^{0.3} - 1\right) = 0.585.$$

while for $r = 4$

$$\left(\frac{r}{r-1}\right) \left(r^{0.3} - 1\right) = 0.687,$$

which plainly shows the increase in power with increasing compression ratios.

It is desirable, however, to have an expression for the work of the expansion based upon the pressure in the cylinder at the beginning of the expansion stroke (explosion pressure), rather than upon the pressure in the cylinder at the beginning of the

compression stroke. Besides this, a study of indicator diagrams shows that the exponent γ is somewhat greater for the expansion than for the compression and may preferably be taken as 1.32 Then, since

$$P_1\left(\frac{r\,l}{r-1}\right)^{1.32}=P_c\left(\frac{l}{r-1}\right)^{1.32}$$

(P_c being the absolute compression pressure), introducing the pressure multiplying factor a and making a few simplifications, we may write equation (8):

$$W_e=\frac{\pi b^2\,a\,P_c}{14.4}\left(\frac{l}{r-1}\right)^{1.32}\left[\left(\frac{l}{r-1}\right)^{-0.32}-\left(\frac{l\,r}{r-1}\right)^{-0.32}\right]$$

Dividing the part outside and multiplying the part inside the brackets by

$$\left(\frac{l}{r-1}\right)^{0.32}$$

we get

$$W_e=\frac{\pi b^2\,a\,P_c}{14.4}\left(\frac{l}{r-1}\right)\left[1-\left(\frac{1}{r}\right)^{0.32}\right]\textit{foot-pounds}\ldots\ldots\ldots(10)$$

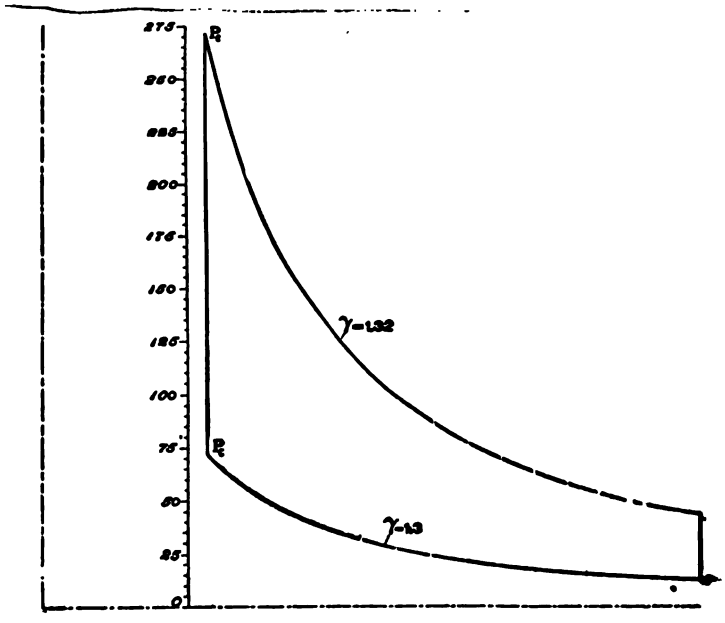

FIG. 7.—IDEAL DIAGRAM.

Exhaust and Suction Curves—Fig. 7 represents ideal compression and expansion curves. The actual curves differ slightly from these curves, for several reasons. In the first place, the entire gas in the combustion chamber is not ignited instantly, and, therefore, we do not have in an actual diagram a straight vertical line P_e P_e making very distinct junctions with the compression and expansion curves. If the ignition spark is produced while the piston is a the end of the stroke the line P_e P_e will be slightly inclined to the right, but in order to convert the maximum percentage of the heat energy of the charge into useful work the spark must occur a moment before the piston reaches the end of the stroke. The result of this is that toward the end of the compression stroke the compression curve assumes a rising inflection, as indicated in Fig. 8, and instead of joining the vertical ignition line sharply, it does so with a curve of considerable radius.

Another thing which modifies the form of the diagram is the fact that the expansion cannot be continued in the cylinder till the end of the expansion stroke and the exhaust valve remain closed. It must be remembered that the exhaust valve does not

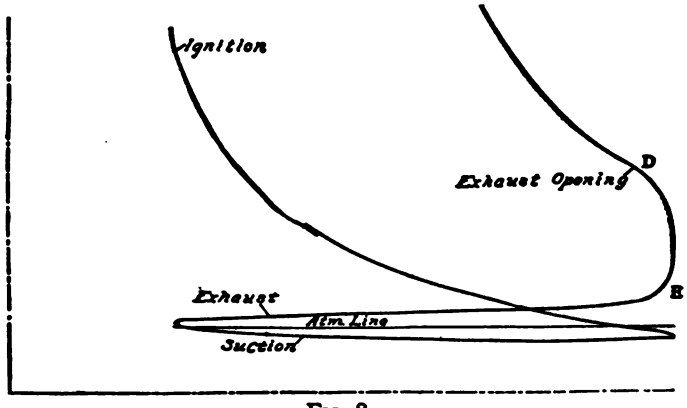

FIG. 8.

open instantly but gradually, and if it began to open only at the end of the stroke, the piston upon the beginning of the exhaust stroke would encounter a back pressure practically equal to the pressure which was acting upon it just before the completion of the power stroke. There would be a very considerable back pressure during a large portion of the return stroke, and this

would not only cause a very considerable loss in power, but, owing to the retention of the hot gases in the cylinder, would tend to overheat the cylinder. For this reason the exhaust valve begins to open when about seven-eighths of the power stroke is completed, and the pressure in the cylinder then drops more rapidly than it otherwise would. This takes the upper right-hand corner off the diagram, as shown by line *D E*, Fig. 8.

So far we have considered only the curves traced by the pencil of the indicator during the compression and expansion strokes. When the piston begins the exhaust stroke, and, indeed, throughout that stroke, the pressure in the cylinder is somewhat above atmospheric and the indicator pencil will trace a line, slightly curved, a little above the atmospheric line. When the motor runs at relatively low speed the exhaust line will join the atmospheric line at the end of the stroke, but at high speed it will then still be above the atmospheric line, and for this reason the exhaust valves in high-speed motors are held open a little longer than the end of the exhaust stroke. During the first part of the following inlet stroke the pressure in the cylinder drops fairly rapidly, partly because some more of the burned gases escape and partly because the space occupied by the gases rapidly increases. A short distance from the beginning of the stroke the pressure drops below atmospheric, and from that point on to the end of the stroke there is a suction or a partial vacuum in the cylinder, the suction line lying below the atmospheric line and being generally slightly concaved toward the atmospheric line. At high speed the pressure is still below atmospheric at the end of the suction stroke, and the inlet valve of a high-speed motor remains open for a short time after the piston begins the compression stroke, because the remaining difference in pressure inside and outside the cylinder, together with the inertia of the inrushing column of charge insures a continued inflow. From the beginning of the compression stroke the pressure in the cylinder rises. The pressure line soon cuts the atmospheric line, and then, as the compression proceeds, rises at a constantly increasing rate, as already explained.

When the motor runs at relatively low speed the pressure in the cylinder is atmospheric at the beginning and end of the suction stroke. The pressures during the exhaust and suction stroke are so small, as compared with the pressure of explosion, that it is necessary to draw this part of the diagram to a different scale from the compression and expansion curves, in order to show it plainly.

Thermal Efficiency—The thermal efficiency is the ratio of the thermal energy actually utilized in the motor to the total amount of heat energy supplied to the gases. In the form of an equation this may be written:

$$\eta = \frac{\textit{Energy supplied} - \textit{energy discharged}}{\textit{energy supplied.}}$$

Referring to Fig. 9, let

T_1 = Absolute temperature of the gas just previous to ignition;

T_2 = Absolute temperature of the gas after ignition;

T_3 = Absolute temperature at the completion of the expansion stroke;

T_0 = Absolute temperature of the gas as it is drawn into the cylinder.

The heat energy being supplied to the gas at constant volume, its value—considering a unit quantity of gas—is evidently $C_v(T_2 - T_1)$. The energy is also discharged at constant volume at the end of the expansion stroke, the amount so discharged being $C_v(T_3 - T_0)$. We may write, therefore,

$$\eta = \frac{(T_2 - T_1)\,C_v - (T_3 - T_0)\,C_v}{(T_2 - T_1)\,C_v} =$$

$$1 - \frac{T_3 - T_0}{T_2 - T_1} \quad \ldots\ldots\ldots\ldots\ldots\ldots\ldots\ldots\ldots\ldots\ldots\ldots (13)$$

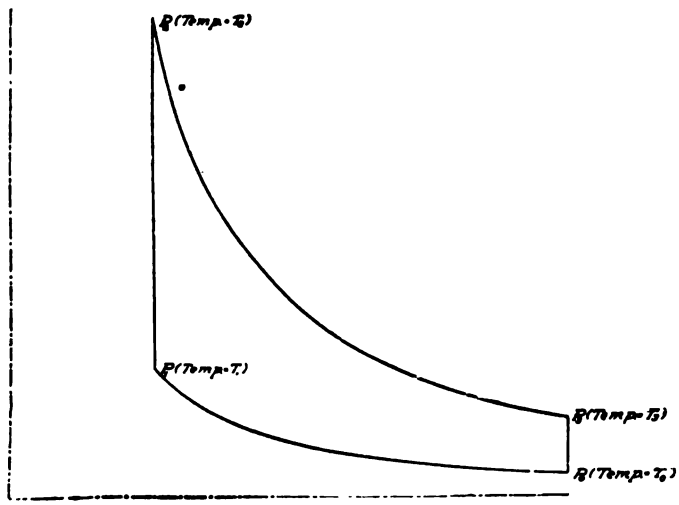

FIG. 9.

But since both the compression and expansion are adiabatic, for which form of compression or expansion

$$TV^{\gamma-1} = Constant,$$

we may write

$$\frac{T_1}{T_0} = \frac{T_2}{T_3} = \left(\frac{V_0}{V_1}\right)^{\gamma-1}.$$

hence

$$T_3 = \frac{T_2}{T_1} T_0,$$

which, substituted in (13), gives

$$\eta = 1 - \frac{\frac{T_2}{T_1} T_0 - T_3}{T_2 - T_1}$$

Dividing both the numerator and denominator of the fraction by

$$\frac{T_2}{T_1} - 1:$$

$$\eta = 1 - \frac{T_0}{T_1} =$$

$$1 - \left(\frac{V_1}{V_0}\right)^{\gamma-1} =$$

$$1 - \left(\frac{1}{r}\right)^{\gamma-1}$$

Since in gasoline engine work γ is always in the neighborhood of 1.3, we may finally write

$$\eta = 1 - \left(\frac{1}{r}\right)^{0.3} \quad \text{.....} (14)$$

which simple equation gives the theoretical thermal efficiency of the Otto cycle gas engine. This equation is of interest in that it strikingly shows the influence of the compression ratio on the thermal efficiency. Thus, for instance, with a compression ratio of 3 the theoretical efficiency is

$$1 - \left(\frac{1}{3}\right)^{0.3} = 0.281,$$

and with a compression ratio of 4

$$1 - \left(\frac{1}{4}\right)^{0.3} = 0.341$$

and with a compression ratio of 5

$$1 - \left(\frac{1}{5}\right)^{0.3} = 0.383.$$

Application of Formula.—We will now work out a practical example with the aid of the formulae developed in the fore-

going. We will assume an engine cylinder with a bore b = 3.5 inches and a stroke l = 5 inches. Let the compression ratio r be 4.5. The normal speed of such a motor is generally about 1,800 revolutions per minute, which corresponds to 1,500 feet piston speed per minute. It has been found that at such a speed an engine with large size valves properly timed draws in about 68 per cent. of its displacement volume of air per cycle. That no full charge is drawn in is due to the fact that, owing to wire drawing in the valve passages, the pressure in the compression space will not be reduced to atmospheric at the end of the exhaust stroke and, in addition, the pressure in the cylinder will not quite be up to atmospheric at the end of the inlet stroke. We may assume that the initial pressure at the beginning of the compression stroke is 12.6 lbs. per square inch. The air may be considered to be at 62° Fahr. (= 523° *abs.*). The compression pressure then will be

$$12.6 \times 4.5^{1.3} = 89$$

pounds per square inch absolute, and the compression temperature

$$523 \times 4.5^{0.3} = 821$$

degrees absolute or 360° Fahr.

The ratio in which the pressure is multiplied on explosion varies with different shapes of combustion chamber, and also with the mixture proportion, but may be taken as 3.75 in this case. The explosion pressure then will be

$$3.75 \times 89 = 333.7$$

pounds per square inch absolute, and the explosion temperature

$$3.75 \times 821 = 3{,}079° \textit{ abs.}$$

The ratio in which the absolute temperature is multiplied is, of course, the same as the ratio in which the absolute pressure is multiplied, since the heat is imparted to the gas at constant volume.

The work of expansion, according to equation (12), is

$$W_e = \frac{3.1416 \times 3.5^2 \times 3.75 \times 89}{14.4}\left(\frac{5}{3.5}\right)\left[1 - \left(\frac{1}{4.5}\right)^{0.3}\right]$$

$= 486.7$ *ft.-lbs.*

The work of compression, according to equation (10), is

$$W_c = \frac{3.1416 \times 3.5^2 \times 12.6}{14.4} \times \frac{22.5}{3.5} \times 0.57 = 123.4 \textit{ ft.-lbs.}$$

The useful work per cycle is therefore

$$486.7 - 123.4 = 363.3 \textit{ ft.-lbs.}$$

Since at 1,800 revolutions there are 900 explosions, the work done per minute is

$$900 \times 363.3 = 326{,}970 \textit{ ft.-lbs.}$$

Now, one mechanical horsepower is equal to 33,000 foot pounds per minute, so this 3.5 × 5-inch cylinder develops

$$\frac{326{,}970}{33{,}000} = 9.9 \textit{ indicated h.p. approximately.}$$

If 20 per cent. is allowed for the loss due to suction, exhaust back pressure and mechanical friction, we get for the net output

$$0.8 \times 9.9 = 7.9 \textit{ brake horsepower.}$$

This is just about what would be expected from a motor of this size.

The piston displacement is

$$\frac{3.5 \times 3.5 \times 5 \times 3.1416}{4} = 48.1 \textit{ cu. in.}$$

and since 68 per cent. of this volume of air is drawn in at each suction, the amount of air drawn in is

$$0.68 \times 48.1 = 32.7 \textit{ cu. in.}$$

The amount of air consumed per hour is

$$\frac{60 \times 900 \times 32.7}{1{,}728} = 1{,}022 \textit{ cu. ft.},$$

which weighs

$$1{,}022 \times 0.076 = 77.7 \textit{ lbs.}$$

and is mixed (if we assume the proportion of air to gasoline to be 16:1) with

$$\frac{77.7}{16} = 4.85 \textit{ lbs. gasoline.}$$

Suppose that the gasoline is of 0.74 specific gravity. Then, since one gallon of this gasoline weighs 6.18 lbs., and since the engine develops 7.9 brake horsepower, the gasoline consumption per brake horsepower-hour is

$$\frac{4.85}{6.18 \times 7.9} = 0.1 \textit{ gallon (appr.).}$$

Since the net energy developed in the cylinder during the power stroke is 363.3 ft.-lbs., and the stroke is 5/12 ft. long, the total mean effective pressure on the piston is

$$\frac{363.3 \times 12}{5} = 872 \textit{ lbs.}.$$

and since the area of the piston head is 9.62 sq. in., the unit m.e.p. is

$$\frac{872}{9.62} = 90.6 \textit{ lbs. p. sq. in.}$$

With 20 per cent friction loss this gives a brake m.e.p. of

$$0.8 \times 90.6 = 72.5 \textit{ lbs. p. sq. in.}—$$

a conservative figure.

CHAPTER IV.

CONVERSION OF RECIPROCATING INTO ROTARY MOTION.

Number of Cylinders—For power generating purposes a single-cylinder motor offers several important advantages. It is of the simplest possible construction, inexpensive to manufacture and more economical in the use of fuel than any other type. Along with its advantages it possesses, however, two inherent defects, particularly from the standpoint of its use in automobile work, for which reason it is no longer employed on automobiles.

It has already been pointed out that in a four-stroke motor only one stroke in every four is a power stroke; between succeeding power strokes there are three so-called idle strokes, and during one of these, the compression stroke, power is even consumed by the motor. In order, therefore, to keep the engine running at a fairly uniform speed against a constant or nearly constant resistance, it is necessary to employ a heavy flywheel in which some of the energy liberated is stored during the expansion stroke, to be given out again during the three following idle strokes. But a heavy flywheel is not desirable on a car, because of the additional weight, which consumes fuel, lessens the speed and hastens the wear of the tires. Another objectionable feature of the single cylinder motor is its lack of balance. Vibrations in a motor are due to the reactions of the explosion and of the inertia forces. Now, if we consider a motor of a given output, the force of individual explosions is necessarily much greater in a single-cylinder motor than in a multi-cylinder motor. Moreover, in a single-cylinder motor the entire reciprocating mass is in a single unit, and the reactions of its inertia forces produce a strong vibrating effect, while in a multicylinder motor the reciprocating mass can be divided into several units so arranged as to move in opposite directions at any given moment, thereby neutralizing the inertia effects.

The reciprocating motion of the piston is converted into rotary motion of the crankshaft by means of an intermediate connecting rod. The connecting rod is hinged to both the piston and the crankshaft. Its upper end reciprocates in harmony with the

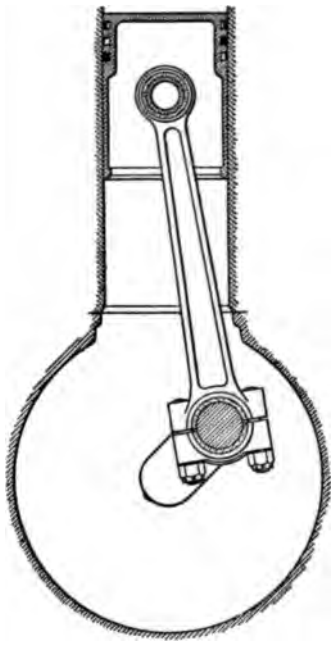

FIG. 10.

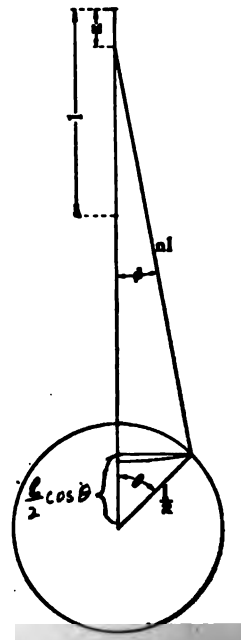

FIG. 11.

piston, while its lower end rotates with the crank pin. Before proceeding with a discussion of crank and piston motion it may be well to state a few fundamental principles which apply to these problems.

Fundamental Relations—Speed is the quotient of the distance traveled by the time in which it is traveled. If the speed is constantly varying, its momentary value can be found by dividing the distance $d\,x$ traveled in an infinitesimal time $d\,t$ by $d\,t$. That is, the speed or velocity

$$v = \frac{dx}{dt}.$$

Acceleration is the quotient of a velocity by the time in which it was acquired. If the acceleration is not constant it is necessary in determining its value to take an infinitesimal increase in velocity $d\,v$ and divide it by the time $d\,t$ in which this increase in velocity accrued. Hence acceleration

$$a = \frac{dv}{dt} = \frac{d^2x}{dt^2}$$

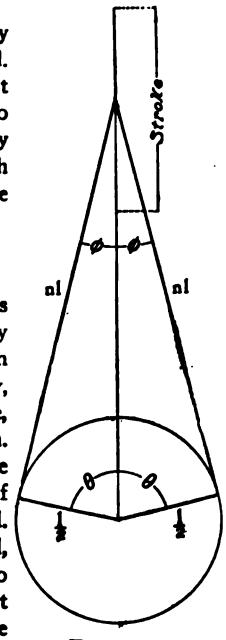

FIG. 12.

The acceleration of a body requires the expenditure of energy. A body in motion has stored up in it a certain amount of energy, called its kinetic energy, or *vis viva*, and this energy is, of course, imparted to it when it is set in motion. Gravity, which acts on a body with a force equal to its weight, imparts a velocity of 32.16 feet per second to it in one second. The unit of velocity is one foot per second, though a unit of one foot per minute is also used. The unit of acceleration is one foot per second per second. The unit of force generally employed in mechanical work in this country is the pound. Then, since a unit of force acting on a unit mass (one pound) accelerates it 32.16 feet per second per second, and since the acceleration is directly proportional to the acting force and inversely proportional to the mass acted upon, we may write

$$a = \frac{32.16\,F}{W} \quad \ldots\ldots\ldots\ldots\ldots (15) \quad \text{or} \quad F = \frac{W\,a}{32.16} \quad \ldots\ldots\ldots\ldots\ldots (16)$$

The factor 32.16 is known as the acceleration of gravity, and is usually denoted by g.

Piston Motion—In studying the motions of the different parts of an engine, it is generally assumed that the crank pin rotates at a uniform speed. This supposition is nearly correct. A typical arrangement of the piston, connecting rod and crankshaft is shown in Fig. 10, and in Fig. 11 these moving parts are represented diagrammatically. The heavy line $\frac{l}{2}$ represents the crank-arm and the heavy line $n\,l$ the connecting rod. The lengths of these lines represent the "centre to centre" distances; that is, in

the case of the crank-arm the distance between the centre of the crankshaft journal and the centre of the crank-pin, and in the case of the connecting rod the distance between the centre of the crank-pin bearing and the centre of the piston-pin bearing. It will be seen that in Fig. 11 the crank-arm has moved from the upper dead centre position through an angle θ, and the piston has in consequence moved down a distance x from its topmost position. It is now desired to find the relation between θ and x, so that we may calculate the position of the piston corresponding to any position of the crank, as well as the speed and acceleration of the piston corresponding to any crank position and a given speed of rotation of the crankshaft.

Referring now to Fig. 11, it is obvious that

$$x = \frac{l}{2}(1 - \cos\theta) + n\,l(1 - \cos\phi).^{*} \qquad \ldots\ldots\ldots\ldots (17)$$

But

$$\cos\phi = \sqrt{1 - \sin^2\phi} \qquad \ldots\ldots\ldots\ldots (18)$$

and

$$n\,l \sin\phi = \frac{l}{2}\sin\theta \qquad \ldots\ldots\ldots\ldots (18\text{ A})$$

so that

$$\sin\phi = \frac{\sin\theta}{2n},$$

which substituted in (18) gives

$$\cos\phi = \sqrt{1 - \frac{\sin^2\theta}{4n^2}}.$$

Inserting this value of $\cos\phi$ in equation (17) we get

$$x = \frac{l}{2}(1 - \cos\theta) + n\,l\left(1 - \sqrt{1 - \frac{\sin^2\theta}{4n^2}}\right) \qquad \ldots\ldots\ldots\ldots (19)$$

This equation enables us to determine the portion of the stroke completed while the crank is in any position. Now assume that the ratio n of the connecting rod length to length of stroke is 2, and let the length of stroke be unity. Then, after a quarter turn, when $\theta = 90°$, the fraction of the stroke completed will be

$$\tfrac{1}{2} + 2\left(1 - \sqrt{1 - \tfrac{1}{16}}\right) = 0.564.$$

It is thus seen that when the crank has turned through one-quarter of a revolution, more than half of the stroke is completed. The piston, therefore, travels faster during the first

*For the third and fourth quadrants, i. e., the return stroke, if angles ϕ to the left of the axis are considered negative, the second half of this expression should be preceded by a — instead of a + sign. As here given the equation applies to the down stroke only, but the return stroke is a reversed duplicate of this.

half of its down stroke than during the last half; similarly it may be shown that it travels slower during the first half of the return stroke than during the last half. In Fig. 12 the piston is shown in the maximum speed position, with the connecting rod and crank arm in the corresponding positions for both the down stroke and the return stroke.

Piston Speed—The differentiation of equation (19) with the object of deriving an expression for the instantaneous piston speed involves some difficulties. In fact, the right-hand member of the equation can be differentiated only after being developed into a series—a rather complicated proceeding. But the difficulty can be got around without serious error by adding to the expression under the radical the term

$$\frac{\sin^4 \theta}{64 n^4}.$$

This makes that expression a perfect square, and, taking the root, we have

$$\sqrt{1 + \frac{\sin^4 \theta}{64 n^4} - \frac{\sin^2 \theta}{4 n^2}} = 1 - \frac{\sin^2 \theta}{8 n^2}.$$

Substituting this in equation (19), we get

$$x = \frac{l}{2}(1 - \cos \theta) + n l \left(\frac{\sin^2 \theta}{8 n^2}\right) \quad \text{.....(20)}$$

Differentiating, we find for the momentary piston speed

$$v = \frac{dx}{dt} = \frac{l}{2} \sin \theta \frac{d\theta}{dt} + \frac{l}{4n} \sin \theta \cos \theta \frac{d\theta}{dt}.$$

But since the angular speed of the crank is constant

$$\frac{d\theta}{dt} = \frac{\theta}{t} = \frac{2 \pi N}{60}$$

radians per second, N being the number of revolutions per minute of the crank. Substituting this value and dividing by 12 to get the result in feet, we have

$$v = \frac{\pi l N}{720}\left(\sin \theta + \frac{1}{2n} \sin \theta \cos \theta\right) \textit{ feet per second} \quad \text{.....(21)}$$

From this equation the piston velocity corresponding to any crank position may easily be found. When the crank is in the top dead-centre position ($\theta = 0°$), and in the bottom dead centre position ($\theta = 180°$), and $\sin \theta = 0$ the speed v of the piston is *nil*. Starting from the top dead centre position the speed of the piston increases until it reaches a maximum a little before the crank comes to the quarter position. The crank position corre sponding to maximum piston speed may be found by placing the

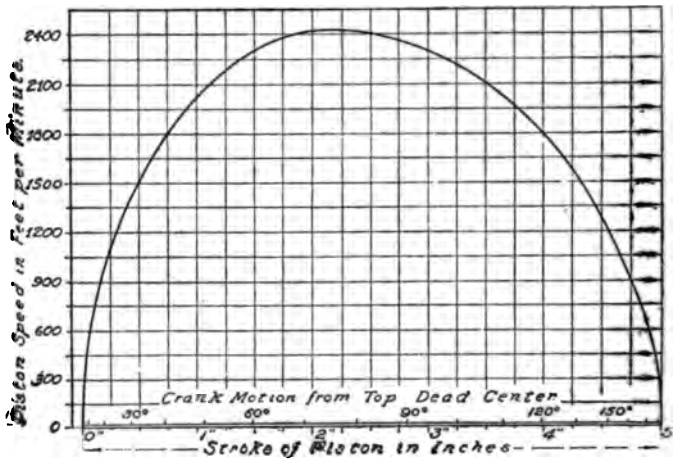

FIG. 13.—PISTON SPEED PLOTTED AGAINST PISTON TRAVEL.
(N = 1800 r.p.m. — l = 5″ — n = 2)

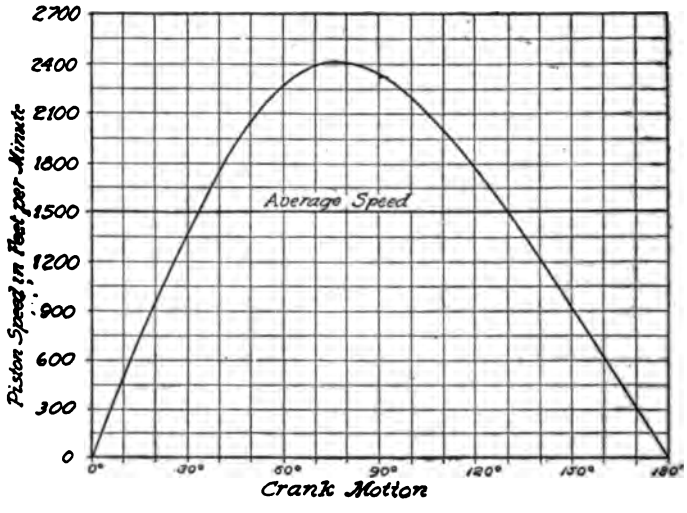

FIG. 14.—PISTON SPEED PLOTTED AGAINST CRANK MOTION.

first differential coefficient of the expression in parentheses in equation (21) equal to zero. This gives

$$\cos\theta + \frac{1}{2n}(\cos^2\theta - \sin^2\theta) = 0;$$

$$2n\cos\theta = \sin^2\theta - \cos^2\theta;$$

$$\frac{2n}{\cos\theta} = \tan^2\theta - 1;$$

$$2n = \cos\theta(\tan^2\theta - 1).$$

Owing to the expedient resorted to when differentiating the expression for the momentary position of the piston, this last equation is not absolutely correct. The maximum speed position corresponds with the position for which

$$\tan\theta = 2n,$$

that is, when the crank arm and connecting rod make a right angle. The parts are shown in this position in Fig. 12

$$\tan\theta = \frac{nl}{\frac{l}{2}} = 2n.$$

The variation of the piston speed during the course of one revolution of the crankshaft is shown graphically in Fig. 13, for a motor of 3.5-inch bore and 5-inch stroke with a 10-inch connecting rod and running 1,800 revolutions per minute.

Piston Acceleration—To obtain an expression for the piston acceleration, we again differentiate equation (21), but before doing this we can simplify this equation by substituting $\frac{\sin 2\theta}{2}$ for its equivalent, $\sin\theta\cos\theta$. This gives us

$$v = \frac{\pi l N}{720}\left(\sin\theta + \frac{1}{4n}\sin 2\theta\right) \textit{ feet per second} \ldots\ldots\ldots\ldots\ldots (22)$$

Then

$$\frac{dv}{dt} = \frac{\pi l N}{720}\left(\cos\theta + \frac{1}{2n}\cos 2\theta\right)\frac{d\theta}{dt}.$$

As before, $\frac{d\theta}{dt}$ is equal to $\frac{2\pi N}{60} = \frac{\pi N}{30}$,

and, substituting, we have

$$a = \frac{\pi^2 N^2 l}{21{,}600}\left(\cos\theta + \frac{1}{2n}\cos 2\theta\right) \textit{ feet per second per second} \ldots (23)$$

The acceleration is a maximum when $\theta = 0$, as $\cos\theta$ and $\cos 2\theta$ both reach their maximum value of 1. This is the dead-centre position. Starting from the top dead-centre the acceleration decreases and it becomes *nil* at the moment the piston reaches its maximum speed. It is, of course, self-evident that as the speed

ceases to increase and is about to begin to decrease there must be a moment of no acceleration.

From the general expression for the force of acceleration,

$$F = \frac{Wa}{g},$$

we may, by inserting the value of the acceleration found in (23), derive the following formula for the force of acceleration of engine reciprocating parts

$$F_a = \frac{W}{g}\,\frac{\pi^2 N^2 l}{21{,}600}\left(\cos\theta + \frac{1}{2n}\cos 2\theta\right) \textit{pounds},$$

which can be simplified to

$$F_a = 0.0000142\, W l N^2 \left(\cos\theta + \frac{1}{2n}\cos 2\theta\right) \textit{pounds} \ldots\ldots\ldots\ldots (24)$$

where W is the weight of the reciprocating parts in pounds, l the length of stroke in inches, N the number of revolutions per minute and n the ratio of connecting rod "centre to centre" length to length of stroke.

Weight of Reciprocating Parts—The inertia force is opposed to the force of explosion and materially reduces the shock received by the connecting rod and crank when the explosion takes place, when the motor is running at considerable speeds. The reciprocating weight W includes the weight of the piston and rings, the piston pin and about one-half of the weight of the connecting rod. If an engine is to be operated at high speed these parts must be made very light. They are made much lighter in automobile motors than in slow running stationary engines, and still lighter in racing automobile motors. In average automobile practice with cast iron pistons the reciprocating parts weigh about 0.4 pound per square inch of piston head area: with aluminum pistons about one-half as much.

It is convenient to express the weight of the reciprocating parts in terms of the piston area, since the force of acceleration acts in opposition to the expanding gas during the first part of the power stroke and adds to it during the last part, and the force of expansion, as obtained from the indicator or manograph diagram, is expressed in pounds per square inch.

The gas-pressure curve represented in Fig. 15 is a portion of manograph diagram and shows a maximum pressure of 300 pounds per square inch. Now, let us consider a motor of 5 inches stroke whose reciprocating parts weight 0.45 pound per square inch. It is required to find the force of inertia at different points of the stroke and the resultant pressure on the connecting rod.

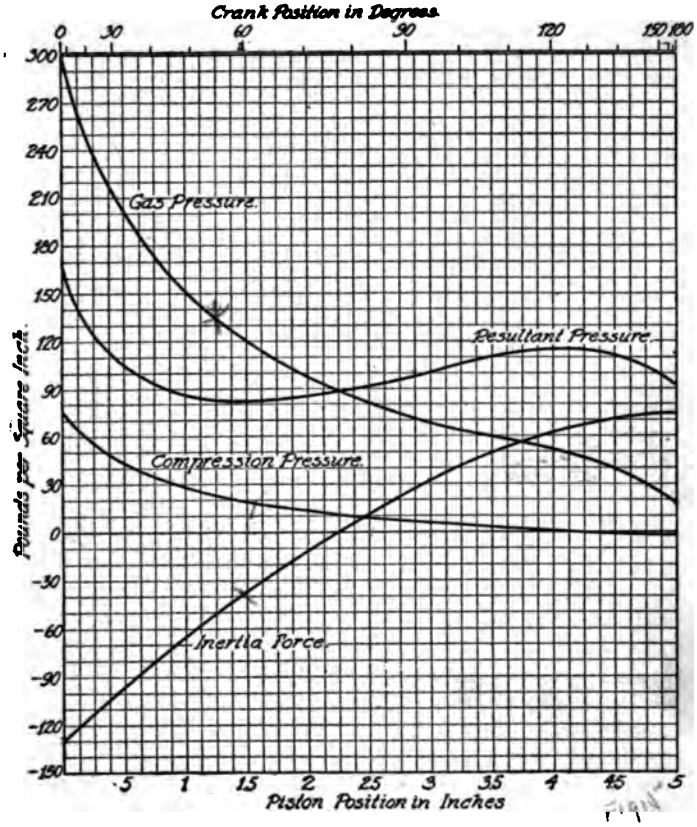

(Assumed that $l = 5.$ inches, $N = 1{,}800$ revolutions per minute, $W = 0.45$ pound per square inch, and connecting rod length $= 2\,l$.

It is first necessary to find the distance the piston has traveled from the top end of the stroke when the crank has turned through different angles from 0 to 180°. This can be done either by the construction of a diagram—in other words, graphically—or the values can be calculated by means of equation (19). The values thus obtained are given in the second column of Table I. The piston speeds corresponding to different crank angles are next determined by means of equation (22). Then the piston acceleration is determined by means of equation (23), and finally the force of acceleration by means of equation (24). All of the values obtained are given in

TABLE I.—ACCELERATION FORCES IN AN ENGINE OF 3.5-INCH BORE, 5-INCH STROKE, CONNECTING ROD LENGTH TWICE THE STROKE AND RECIPROCATING PARTS WEIGHING 0.45 POUND PER SQUARE INCH OF PISTON HEAD AREA AT 1,800 R.P.M.

Degrees.	Piston Position (Inches).	Piston Speed (Feet Per Min).	Piston Acceleration (Feet P. Sec. P. Sec.).	Force of Acceleration (Pounds Per Square Inch).
0	0	0	9,247	129.5
10	0.048	518	9,027	126.3
20	0.190	995	8,179	114.3
30	0.415	1,433	7,166	100.2
40	0.720	1,762	5,854	81.8
50	1.047	2,094	4,435	62.0
60	1.485	2,295	2,711	37.9
70	1.925	2,397	1,114	15.6
80	2.375	2,421	—450	—6.3
90	2.815	2,355	—1,881	—26.3
100	3.245	2,220	—3,026	—42.4
110	3.635	2,020	—3,944	—55.2
120	3.985	1,785	—4,624	—64.7
130	4.292	1,514	—5,078	—72.4
140	4.550	1,224	—5,346	—74.7
150	4.745	922	—5,409	—77.5
160	4.890	616	—5,542	—77.6
170	4.972	307	—5,548	—77.6
180	5.000	0	—5,548	—77.6

Table I. The inertia force curve is now drawn in in Fig. 15. At the beginning of the stroke the reciprocating masses must, of course, be set in motion, and they then consume some of the energy of the expanding charge. When the crank has turned through an angle of about 76 degrees the piston reaches its maximum speed; thereafter its speed decreases and it returns the energy which it absorbed during the first part of the stroke. By combining the gas pressure curve and the inertia force curve we obtain the curve of the resultant pressure, as shown in Fig. 15. It will be noticed that the inertia of the reciprocating parts greatly reduces the maximum pressure on the connecting rod.

In the same way that we plotted in Fig. 15, the resultant pressure in the direction of piston travel for the power stroke, we may plot this pressure for the other strokes. In doing this the gaseous pressures during the admission and exhaust strokes may be neglected, as they are exceedingly small in comparison with the inertia forces at normal speed. The pressure of the gas during compression must, however, be taken into account. All forces which oppose the motion of the piston are considered negative and are plotted from the base line downward, while all forces which assist the piston in its motion are con-

sidered positive and are plotted from the base line up. In Fig. 16 is shown such a diagram for a complete cycle, the assumptions being the same as for Fig. 15. Starting with the admission stroke, the only force acting is that of inertia, and since this is a down stroke, the inertia is exactly the same as for the power stroke, as plotted in Fig. 15. Exigencies of space made it necessary to use in Fig. 16 a horizontal scale half as large as in Fig. 15.

Next comes the compression stroke, during which both gas pressure and inertia forces are acting. Owing to the fact that this is an up-stroke the inertia force diagram is the reverse of the inertia force diagram for the previous stroke. As for every other stroke, the inertia force is at first negative and toward the end positive. The gas pressure during the compression stroke is negative throughout, and in the diagram is represented by a dash-dotted line, while the inertia force for this stroke is represented by a dotted line. The resultant of the two forces is represented by a full line.

The next following portion of the diagram is an exact reproduction of Fig. 15, except that the horizontal scale is only half as large. During the last stroke, while the cylinder is exhausting, only the inertia force is acting, and this is again the same as during the compression stroke. The curve shown in a heavy full line represents, therefore, the variations of the effective pressure in the direction of piston travel throughout the four strokes of the cycle.

In the construction of the inertia curves it is convenient to make use of a table of "crank angle factors." The expression for the inertia force, viz.:

$$0.0000142\, W l N^2 \left(\cos\theta + \frac{1}{2n}\cos 2\theta\right) \textit{ pounds,}$$

may be considered as composed of two parts, one including the different values of the particular engine and the constant, and the other depending entirely upon the position of the crank, and upon the ratio of the connecting rod centre to centre length to the length of stroke. This latter factor $\left(\cos\theta + \frac{1}{2n}\cos 2\theta\right)$ we will call the "crank angle factor," and its values for angles from zero to 180 degrees in increments of 10 degrees, and for values of the ratio n from 1¾ to 2½, inclusive, in increments of ⅛, are given in Table II. A rather peculiar feature in connection with the crank angle factor is that for values of n above 2 the factor is largest for 0 and 180° and smaller for all intermediate angles, while for values of n below

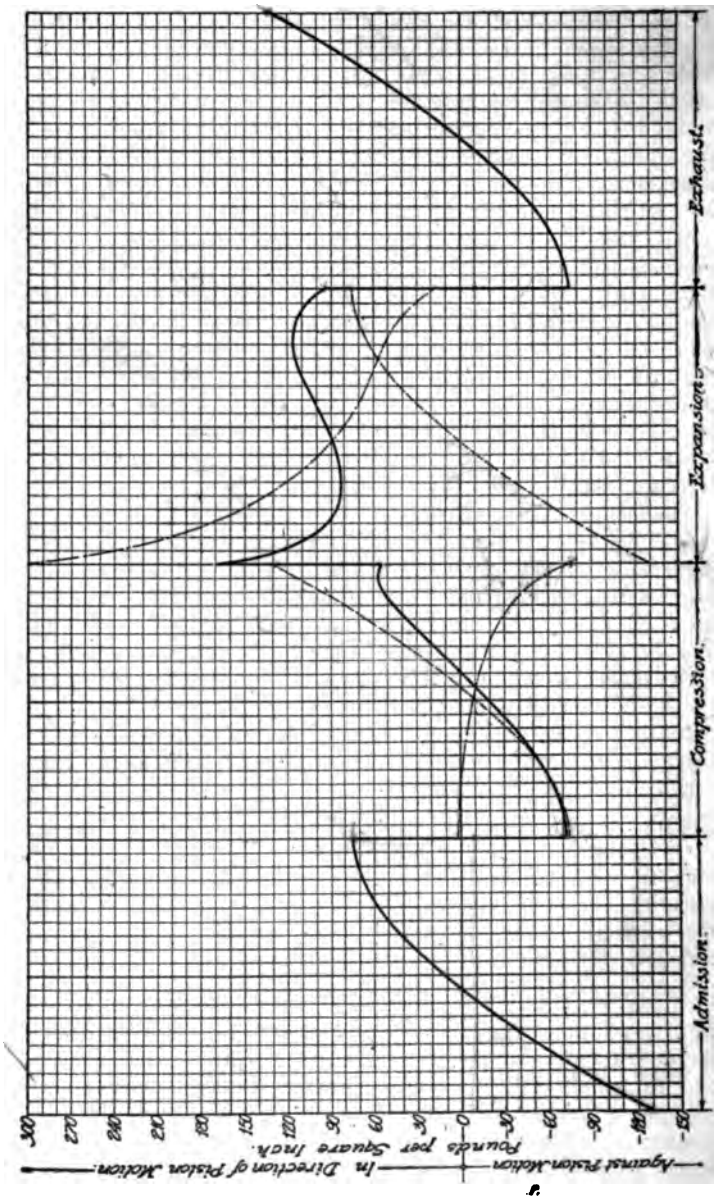

FIG. 16.—DIAGRAM OF RESULTANT PRESSURE IN THE DIRECTION OF PISTON TRAVEL IN A 3.5 × 5 INCH CYLINDER.

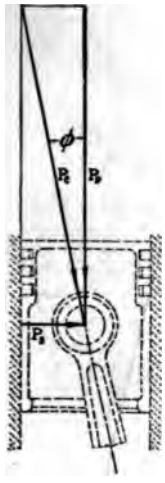

FIG. 17.

2 the factor decreases again as the crank angle approaches 180°; in other words, the inertia force reaches its second maximum some time before the lower dead centre is reached.

Crank Moment—From Fig. 16 it can be seen that the pressure in the direction of piston travel is a maximum at the beginning of the power stroke. The turning effort on the crank at that moment is nil, however, for the reason that the connecting rod and crank arms are then in line with each other, and all the pressure is spent in producing thrust on the crankshaft bearings.

The turning moment is the product of a force into the perpendicular distance from the line in which the force acts, to the centre of rotation, and is expressed in pounds-inches or pounds-feet.

The pressure in the direction of piston travel is held in balance by two other forces, viz., the pressure acting along the connecting rod and the reaction to the side thrust against the cylinder wall. Fig. 17 is a so-called parallelogram of forces, in which these various forces are represented. If we denote the pressure in the

TABLE II.—CRANK ANGLE FACTOR OF INERTIA FORCE.

	n =						
	1¾	1⅞	2	2⅛	2¼	2⅜	2½
0°	1.286	1.267	1.250	1.235	1.222	1.211	1.20
10°	1.254	1.236	1.220	1.206	1.194	1.183	1.173
20°	1.158	1.144	1.131	1.120	1.110	1.101	1.093
30°	1.009	0.999	0.991	0.984	0.977	0.971	0.966
40°	0.816	0.812	0.809	0.807	0.805	0.803	0.801
50°	0.593	0.596	0.599	0.602	0.604	0.606	0.608
60°	0.357	0.367	0.375	0.382	0.389	0.395	0.400
70°	0.124	0.138	0.151	0.162	0.172	0.181	0.189
80°	—.095	—.077	—.061	—.047	—.035	—.024	—.014
90°	—.286	—.266	—.250	—.235	—.222	—.210	—.200
100°	—.422	—.425	—409	—.395	—.383	—.372	—.362
110°	—.560	—.546	—.533	—.522	—.512	—.503	—.495
120°	—.643	—.633	—.625	—.618	—.611	—.605	—.600
130°	—.693	—.689	—.686	—.684	—.682	—.680	—.678
140°	—.716	—.720	—.723	—.725	—.727	—.729	—.731
150°	—.723	—.733	—.741	—.748	—.755	—.761	—.766
160°	—.722	—.736	—.749	—.760	—.770	—.779	—.787
170°	—.717	—.734	—.750	—.764	—.776	—.787	—.797
180°	—.714	—.734	—.750	—.765	—.778	—.790	—.800

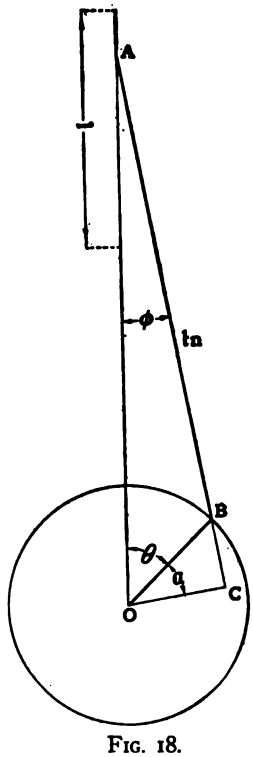

FIG. 18.

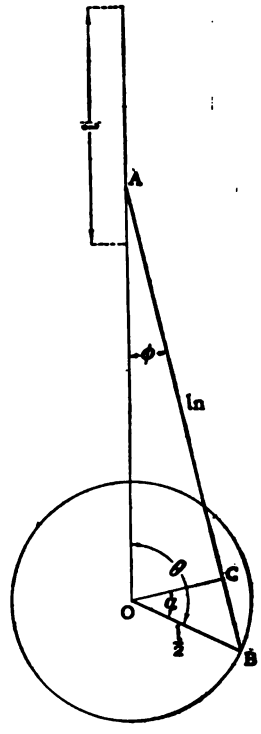

FIG. 18A.

direction of piston travel by P_p the pressure acting along the connecting rod by P_c and the side thrust reaction of the cylinder wall by P_s, then, obviously,

$$P_c = \frac{P_p}{\cos \phi} \quad \text{.....} (25)$$

and

$$P_s = P_p \tan \phi \quad \text{.....} (25A)$$

In Figs. 18 and 18A are shown two diagrams of the crank and connecting rod with the crank at an angle θ beyond the top dead centre, which angle is less than 76° in Fig. 18 and more than 76° in Fig. 18A. The lever arm through which the force F_c, acting along the connecting rod, attacks the crank is

$$OC = \frac{l}{2} \cos a.$$

But

$$\alpha = 90^\circ - (\theta + \phi)$$

in Fig. 18 and

$$\alpha = -\left[90^\circ - (\theta + \phi)\right]$$

in Fig. 18A, hence, generally,

$$\alpha = \pm\left[90^\circ - (\theta + \phi)\right],$$

and, since the cosine of an angle is equal to the sine of its complement,

$$\cos\alpha = \pm\sin(\theta + \phi) \qquad (26)$$

and

$$\frac{l}{2}\cos\alpha = \pm\frac{l}{2}\sin(\theta + \phi),$$

which may be written in the form

$$\pm\frac{l}{2}(\sin\theta\cos\phi + \cos\theta\sin\phi)$$

Multiplying the force by the lever arm through which it acts, we get for the turning moment

$$M = \frac{P_p}{\cos\phi} \times \frac{l}{2}(\sin\theta\cos\phi + \cos\theta\sin\phi) =$$

$$\frac{P_p l}{2}\left(\sin\theta + \cos\theta\frac{\sin\phi}{\cos\phi}\right) \qquad (27)$$

Referring again to Fig. 18,

$$\sin\phi = \frac{\sin\theta}{2n}$$

and

$$\cos\phi = \sqrt{1 - \frac{\sin^2\theta}{4n^2}} = 1 - \frac{\sin^2\theta}{8n^2}$$

(approximately). Consequently,

$$\frac{\sin\phi}{\cos\phi} = \frac{\dfrac{\sin\theta}{2n}}{1 - \dfrac{\sin^2\theta}{8n^2}} = \frac{4n\sin\theta}{8n^2 - \sin^2\theta}.$$

Substituting in (27) we get

$$M = \frac{P_p l}{2}\left(\sin\theta + \frac{4n\sin\theta\cos\theta}{8n^2 - \sin^2\theta}\right) \qquad (28)$$

This equation gives the turning moment per square inch of piston head area in pounds-inches. It is usually desired, however, to get the total turning moment expressed in pounds-feet, and to this end the value for M in equation (28) has to be

multiplied by the piston head area and divided by 12. This gives for the total crank turning moment

$$M_t = \frac{\pi b^2 P_p l}{96}\left(\sin\theta + \frac{4 n \sin\theta \cos\theta}{8 n^2 - \sin^2\theta}\right) \textit{pounds-feet} \ldots\ldots\ldots\ldots (29)$$

which equation enables us to determine the value of the turning moment on the crank for any angular position. In this equation $\sin^2\theta$ is quite small as compared with $8n^2$, and it may be neglected in approximate calculations, in which case the equation can be reduced to the simple form

$$M_t = \frac{\pi b^2 l P_p}{96}\left(\sin\theta + \frac{\sin\theta \cos\theta}{2 n}\right) \textit{pounds-feet.}$$

The moment is nil for $\theta = 0$ degrees and 180 degrees, as in both of these cases $\sin\theta = 0$. It reaches a maximum toward the end of the first quarter revolution. For $\theta = 90$ degrees, $\cos\theta = 0$ and the second part of the term in parentheses vanishes. The turning moment on the crank is then equal to the product of the pressure on the piston into the length of the crank-arm—

$$M = \frac{\pi b^2 l P_p}{96} \textit{pounds-feet.}$$

If we divide the turning moment by the length of the crank-arm we get the tangential effort F_t. Hence

$$F_t = \frac{\pi b^2 P_p}{4}\left(\sin\theta + \frac{4 n \sin\theta \cos\theta}{8 n^2 - \sin^2\theta}\right) \textit{pounds} \ldots\ldots\ldots\ldots (30)$$

For $\theta = 90°$ we have

$$F_t = \frac{\pi b^2}{4} P_p \textit{ pounds.}$$

The motion of the crank pin is then for a moment parallel to the motion of the piston and since, owing to the connecting rod connection, their distance apart cannot change, they must travel at the same speed, and the pressures on them in the vertical direction must be the same.

In Fig. 19 is shown a crank moment diagram for a single cylinder motor of 3½ inches bore, 5 inches stroke, 10 inches connecting rod length, 0.45 pound reciprocating weight per square inch of piston head area and indicating a compression pressure of about 70 pounds per square inch gauge and an explosion pressure of 300 pounds per square inch.

In drawing a diagram of this kind it is convenient to make use of a table of crank angle factors for crank pin turning moment, like Table III. This table gives the values of the expression

$$\sin\theta + \frac{4 n \sin\theta \cos\theta}{8 n^2 - \sin^2\theta}.$$

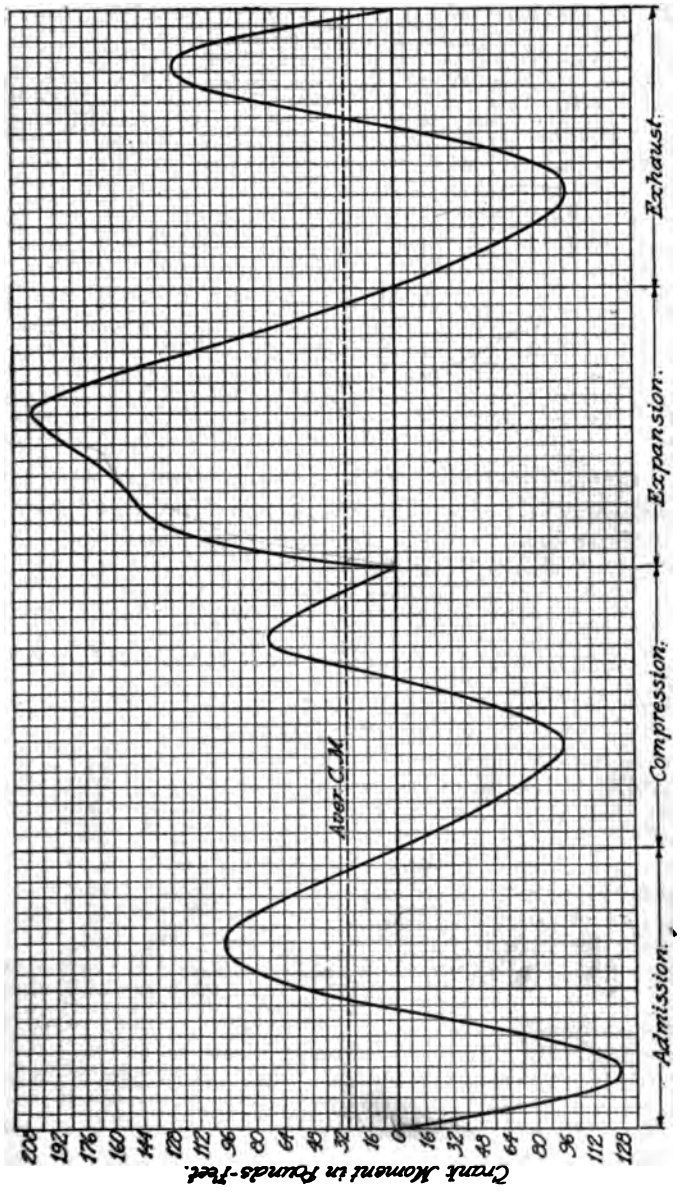

FIG. 19.—TURNING MOMENT DIAGRAM FOR SINGLE CYLINDER MOTOR.

TABLE III.—CRANK ANGLE FACTOR OF CRANK MOMENT.

θ	n = 1¾	1⅞	2	2⅛	2¼	2⅜	2½
0°	0.	0.	0.	0.	0.	0.	0.
10°	0.223	0.220	0.217	0.214	0.212	0.210	0.208
20°	0.435	0.428	0.423	0.418	0.414	0.410	0.407
30°	0.626	0.617	0.610	0.603	0.598	0.592	0.588
40°	0.788	0.778	0.769	0.761	0.752	0.748	0.743
50°	0.913	0.900	0.894	0.886	0.879	0.873	0.868
60°	1.177	0.988	0.980	0.973	0.966	0.957	0.955
70°	1.038	1.031	1.025	1.019	1.015	1.011	1.007
80°	1.037	1.033	1.030	1.028	1.025	1.023	1.021
90°	1.	1.	1.	1.	1.	1.	1.
100°	0.933	0.936	0.939	0.942	0.945	0.947	0.949
110°	0.842	0.849	0.857	0.860	0.865	0.869	0.873
120°	0.735	0.745	0.753	0.759	0.766	0.771	0.776
130°	0.624	0.629	0.638	0.646	0.653	0.659	0.665
140°	0.497	0.508	0.517	0.524	0.531	0.537	0.542
150°	0.377	0.383	0.390	0.397	0.402	0.408	0.413
160°	0.250	0.253	0.261	0.266	0.270	0.274	0.277
170°	0.125	0.127	0.130	0.133	0.135	0.137	0.139
180°	0.	0.	0.	0.	0.	0.	0.

of equation (29). From a diagram similar to Fig. 16, we obtain the piston pressure P_D for any crank angle. This we multiply by the area of the piston head

$$\frac{3.5 \times 3.5 \times 3.1416}{4} = 9.62 \textit{ square inches},$$

and then multiply by the value of $\frac{l}{2}$, viz., 2.5 inches, and divide the result by 12 in order to obtain the final result in pounds-feet. The result obtained is multiplied by the crank angle factor obtained from Table III, and the values thus arrived at are plotted as ordinates in a co-ordinate diagram with the crank positions as the abscissas. It will be observed that, starting from the beginning of the admission stroke, the crank turning moment is negative until the crank has turned through about 76°; then it becomes positive and remains so until the end of the stroke. During the first part of the compression stroke for about 107 degrees of crank motion the turning moment is negative again; then it becomes positive, and just before the end of the compression stroke, as the compression pressure overpowers the inertia force, it becomes momentarily negative again. During the whole of the power stroke the turning moment is positive. At about the middle of the power stroke there is a peculiar dip in the curve. This is due to the fact that as the crank approaches the 90° position there is a considerable increase in the piston pressure, owing to the reversal

of the inertia force, while the gas pressure and crank angle are nearly constant. During the last stroke, while the engine is exhausting, only inertia forces are acting, and the crank pin turning moment is negative during the first part and positive during the last part.

Fig. 20 is a crank moment diagram for a two cylinder motor of either the opposed type or of the twin type with both pistons working on a single crank pin. In both of these engine types the explosions occur at equal intervals of one revolution, and both of the pistons start simultaneously on corresponding strokes. The curve of Fig. 20 is based on the assumption that both cylin-

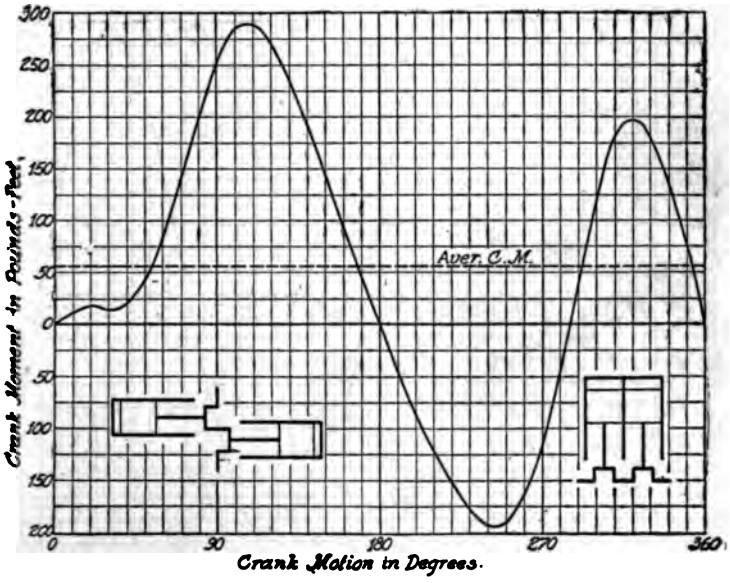

FIG. 20.—TWO-CYLINDER CRANK MOMENT DIAGRAM.

ders are of 3.5 inch bore and 5 inch stroke, and the other assumptions are the same as in the previous example. In such two cylinder motors the power strokes are separated by only a single idle stroke. It will be seen that the maximum turning moment is only a little greater than in the case of a single cylinder motor, although the power and the average turning moment are twice as great. The maximum negative turning moment is, however, also about twice as great in the two cylinder as in the single cylinder motor. The best criterion of the relative uniformity of turning moment is undoubtedly the ratio of the total turning moment

range to the average turning moment. This is about 8.5 in the case of the single cylinder motor and about 6.8 in the case of the double cylinder motor.

Fig. 21 is the turning moment diagram of a four-cylinder motor of 3.5 inches bore and 5 inches stroke. Under the assumptions here made the turning moment reverses in direction at the beginning of each stroke and also 76 degrees farther on. With light reciprocating parts or at lower speed there may be no reversal of the turning moment, though the latter must necessarily always be nil at the beginning of a stroke. The ratio of the total turning moment range to the average turning moment

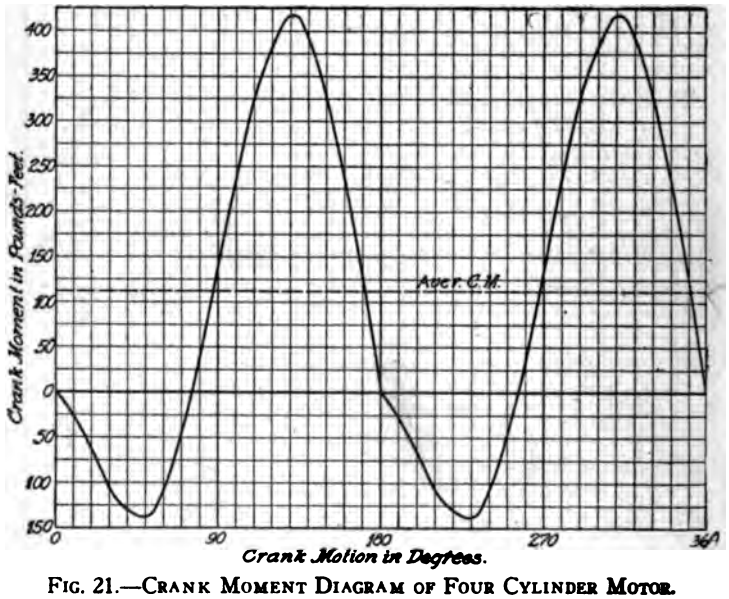

FIG. 21.—CRANK MOMENT DIAGRAM OF FOUR CYLINDER MOTOR.

is 5. This diagram very strikingly shows the effect of the inertia of the reciprocating parts. Although the gas pressure in the cylinder is far greater during the first half of the down stroke than during the last half, the turning moment on the crank is negative during the first half of the stroke, and attains its maximum value during the last half, at about 130 degrees from the top dead centre.

In Fig. 22 are shown the turning moment diagrams of six, eight and twelve-cylinder, 288 cubic-inch engines. In the case of the six-cylinder, the ratio of the maximum turning moment range

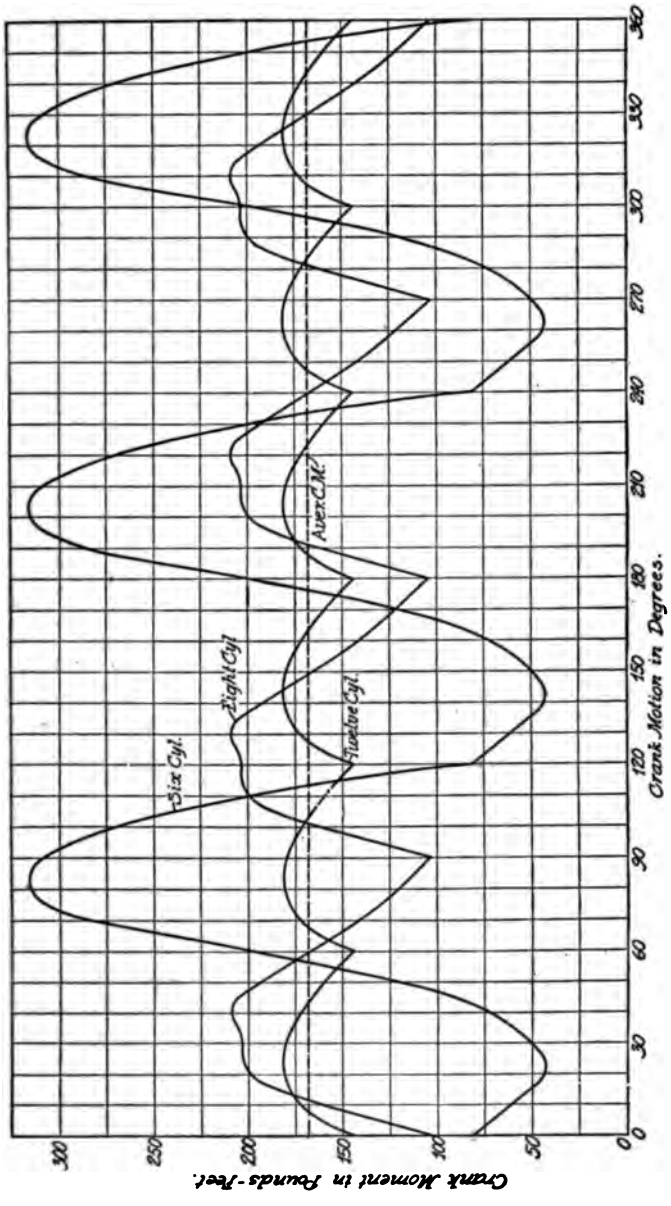

FIG. 22.—SIX, EIGHT AND TWELVE-CYLINDER CRANK MOMENT DIAGRAMS.

to the average turning moment is 1.63. Of course, these different factors of turning moment fluctuation, viz., 8.5 for the single cylinder, 6.8 for the double cylinder, 5 for the four- cylinder, and 1.63 for the six-cylinder motor, apply strictly only if the assumptions here made regarding gas pressure variation, weight of reciprocating parts and relative length of connecting rod hold true, but the factors would be very nearly the same for any practical automobile motor, and the above figures may well be taken as indices of the relative uniformity of turning moment in motors with various numbers of cylinders. In the eight-cylinder type engine the ratio of maximum variation to average turning moment is about 0.58, thus showing a further improvement over the six-cylinder engine. The eight-cylinder compares even more favorably with the six in this respect when low speed turning moments are considered. Finally, in the twelve-cylinder or twin six motor the ratio of maximum variation to average turning moment is only 0.2 and the torque is nearly constant.

The crank moment diagrams may also be made to serve as crank effort diagrams by suitably dividing the vertical scale. Since the crank arm in all the foregoing examples is 2½ inches= 0.208 ft., the tangential effort in pounds on the crank pin for any angular position of the crank is equal to the corresponding crank moment in pounds-feet divided by 0.208. However, to get the full pressure on the crank pin it is necessary to combine the effort thus found with the centrifugal force on the connecting rod head and lower part of the shank, which can be done graphically.

CHAPTER V.

BALANCING OF ENGINES.

There are four possible causes of vibration in a gasoline motor, viz.:

(1) Unbalanced rotating parts.
(2) Unbalanced reciprocating parts.
(3) Torque reaction.
(4) Torsional flexibility of the crankshaft.

Aside from the flywheel, which when properly made is perfectly balanced, the only rotating part of considerable inertia is the crankshaft. If an ordinary single throw crankshaft is rotated at considerable speed, the centrifugal force acting on it is transmitted to the engine frame and always tends to displace the engine in the direction in which the crank arms are pointing at the moment. Since the crank arms are rotating uniformly, the general effect, if the engine were absolutely free, would be to displace its crankshaft centre line in a circle. The rigid connection of the engine to the chassis frame, as well as the more or less flexible connection of the latter to the axles and wheels, materially modifies and reduces the amplitude of the resulting vibration, but does not eliminate it entirely.

Crankshaft Balance—To obviate such vibration the crankshaft must be balanced; that is, it must be provided with counter weights extending from it radially in the opposite direction from

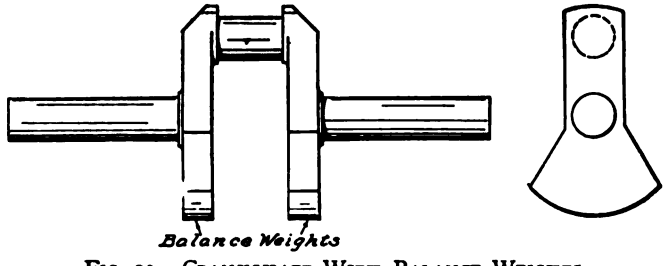

FIG. 23.—CRANKSHAFT WITH BALANCE WEIGHTS.

the crank arms, so proportioned that if the crank is placed on a pair of steel balance ways it will remain in any position in which it is placed. (See Fig. 23). Cranks with more than one throw, in which the throws are symmetrically distributed, are inherently balanced if carefully made, with all crank arms of exactly like dimensions, except for the fact that the radial centre lines of the arms, etc., on one side of the crankshaft may not coincide with the radial centre line of the arms on the other side. This occurs in the double throw crankshaft of two cylinder motors, and produces a slight rotating couple. In most practical cases this can be neglected, but if great stress is laid upon the best possible balance, such cranks can also be provided with balance weights or counterweights opposite each short crank arm.

The balancing of the rotating parts presents no particular difficulty in any type of engine, being merely a matter of care in construction. The reciprocating parts, however, are not so easy to deal with. Considering first the case of the single cylinder motor, its reciprocating parts might be balanced by outside weights connected to the crankshaft in such a manner as to be moved at every instant at the same speed as the engine piston but in the opposite direction. There should be two such weights, one on either side of the motor, each equal to half the weight of the reciprocating parts. Such an arrangement is not practical, however, because, rather than complicate a single cylinder motor in this way, any designer would prefer to adopt a multicylinder motor.

Reciprocating Masses—It is, however, possible to partly balance a reciprocating mass by a revolving mass. This may be explained as follows: A revolving mass is acted upon by a radial force (centrifugal force)

$$F = 1.226\, W N^2 r \text{ pounds} \qquad (31)$$

where W is the weight in pounds, N the number of revolutions per second and r the radius in feet. Such a rotating force can be decomposed into two forces at right angles to each other. We will decompose it into a vertical and a horizontal component. Referring to Fig. 24, let $O\,A$ represent the force in magnitude and momentary direction. Then the vertical component

$$O\,B = O\,A \cos \theta$$

and the horizontal component

$$B\,A = O\,A \sin \theta$$

When $\theta = 0$, that is when the weight is directly above the centre

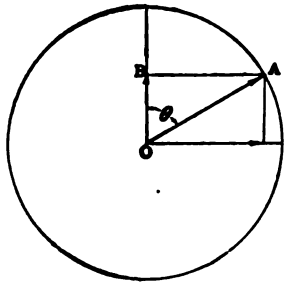

FIG. 24.

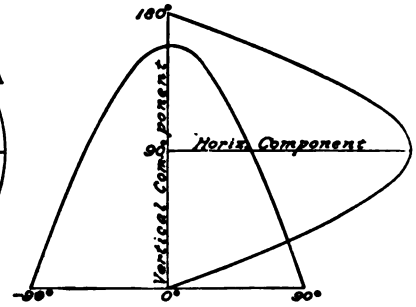

FIG. 25.

of rotation, the vertical component is equal to the total force and the horizontal component is nil. The same when the weight is directly below the centre of rotation, when $\theta = 180$ degrees. Each of the components can be represented by a sine curve; that is, a curve whose abscissas represent angles and whose ordinates are proportional to the sines of the angles represented by the corresponding abscissas. (See Fig. 25.)

Single-Cylinder Motor.—We found the expression for the inertia force due to the reciprocating parts to be (equation 24)

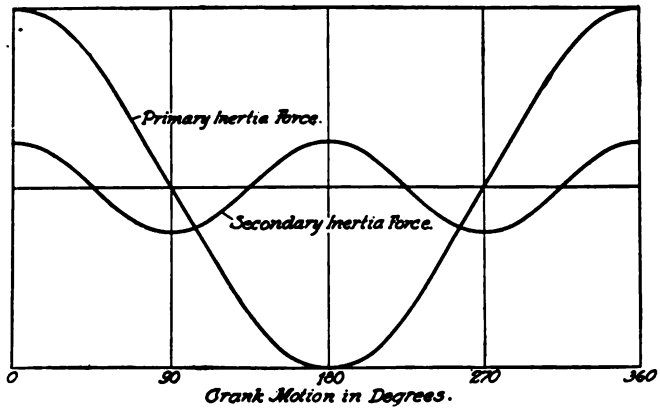

FIG 26.—PRIMARY AND SECONDARY COMPONENTS OF INERTIA FORCE.

$$F_a = 0.0000142\ WlN^2\ (\cos\theta + \frac{1}{2n}\cos 2\theta).$$

It will be observed that the factor enclosed in parentheses is made up of two terms, viz., $\cos\Theta$ and $\frac{1}{2n}\cos 2\Theta$. Each of these terms when plotted forms a sine curve, as shown in Fig. 26. It will be seen that the second term is of twice the frequency as the first; that is, during a given time it passes through zero and through its maximum value twice as often as the first term. The first term in the parentheses multiplied by the factors outside the parentheses, viz.,

$$0.0000142\ WlN^2 \cos\Theta,$$

is known as the primary unbalanced force, and the second term multiplied by the factors outside the parentheses, viz.,

$$\frac{0.0000142\ WlN^2 \cos 2\Theta}{2n}$$

is known as the secondary unbalanced force. With an infinitely long connecting rod the latter would vanish.

In a single-cylinder engine the primary unbalanced force can be partly balanced (or be reduced in value) by means of rotating balance weights connected to the crank arms, as shown in Fig. 23. Consider a single-cylinder motor of 3½-inch bore by 5-inch stroke with reciprocating parts weighing 0.45 lb. per square inch of piston head area. The maximum value of the primary unbalanced force of such a motor is $0.0000142 \times 0.45 \times 5 \times 1{,}800 \times 1{,}800 = 104$ *lbs. p. sq. in.* This gives for the entire reciprocating weight.

$$9.62 \times 104 = 1{,}000\ lbs.$$

maximum primary inertia force. If we provided the crank with a balance weight, such that at 1,200 revolutions per minute the centrifugal force on it were equal to 1,000 pounds, the vertical component of this force would substantially balance the inertia force of the reciprocating parts, but we would then have an equal horizontal component left with nothing to balance it. The net result of this arrangement would obviously be to transform the vertical reciprocating force into a horizontal one, whereby nothing would be gained. But if we provide the crankshaft with such a weight that the centrifugal force is only half the inertia force of the reciprocating parts, then the latter will be reduced by one-half and a horizontal component equal to it will be introduced. The maximum unbalanced force is therefore halved, and the

amplitude of the vibrations will also be halved. In our example, considering the balance weight to be centralized at crank arm length from the center of rotation, the necessary weight can be calculated from equation (31), which can be transformed so as to read

$$W = \frac{F}{1.226\, N^2 r}$$

Substituting

$$W = \frac{1000}{1.226 \times 30 \times 30 \times 0.208} = 4.38$$

and one-half of this is 2.19 pounds. This weight is additional to that required for balancing the crank. The total balancing weight would be divided into halves and each half secured to one of the crank arms. In practice the balance weights are designed with the greater part of the weight as far as possible from the axis, as it is not the weight but the moment of the weight around the axis that counts.

Torque Reaction—The third cause of vibration is the torque reaction. When the connecting rod impresses a certain turning moment upon the crankshaft, the side thrust of the piston against the cylinder wall causes an equal and opposite moment to be impressed upon the engine frame. This can easily be shown algebraically, but it is self-evident, since, according to the laws of mechanics, action and reaction are always equal and opposite. The only way in which this cause of vibration can be eliminated is by having two equal engines side by side, in a single block and turning synchronously in opposite directions by being geared together. This solution of the problem was repeatedly suggested in the early years of automobile history, but was never applied to any extent. It was thought preferable to use multicylinder engines, thus reducing the size of the individual cylinders and the power of the individual explosions. The fluctuations in the turning moment will then be much smaller. It must be remembered that what causes vibration is not an unbalanced force but the fluctuations of such a force. A steady uniform turning moment might twist the motor slighlty out of its normal position, but the engine would remain in that position as long as the torque was maintained and there would be no vibration. But if the moment varies periodically, or even changes in direction, then the motor will move back and forth, or vibrate.

Amplitude of Vibration—A vehicle motor may be considered secured rigidly to the vehicle frame and the latter supported freely upon the vehicle springs. That is, the resistance which determines the amplitude of the vibration is simply the inertia of the forward part of the chassis. We found that in our single cylinder 3.5x5 inch engine there is an upward thrust of

$$9.62 \times 129.5 = 1240 \textit{ pounds}$$

on the engine frame due to the inertia of the reciprocating parts. As the piston descends this force decreases, but at any point up to that of maximum piston speed the engine frame is pulled up with the same force with which the piston is pulled down, because action and reaction are equal and opposite. If we call this force F, the weight of the reciprocating parts w, the weight of the forward part of the chassis W, the velocities of the two v and V respectively, then

$$v = \frac{Fg}{w}$$

and

$$V = \frac{Fg}{W}$$

Hence,

$$\frac{v}{V} = \frac{W}{w}$$

and, since the time of motion is the same for both and the velocities always bear the same ratio $\frac{W}{v}$, it follows that the ratio of the distances moved by the reciprocating parts and the engine frame

$$\frac{d}{D} = \frac{W}{w}$$

In our example, since the reciprocating parts weigh

$$9.62 \times 0.45 = 4.35 \textit{ pounds}$$

and they travel about 2.3 inches before their acceleration ceases, if we assume that the forward part of the car weighs 400 pounds, then it will be thrown up

$$\frac{4.35}{400} \times 2.3 = 0.025$$

or less than 1-32 inch.

It can also be proven that the reaction of the torque M will cause a point located a distance r from the centre of the crankshaft to be displaced a distance

$$d = \frac{M r t^2}{4 I}$$

where t is the time in seconds the torque M acts and I the moment of inertia. But since probably no one has any idea of the magnitude of the moment of inertia of the frame with motor and body, around the crank shaft centre line, this formula is merely of academic interest.

Two Cylinder Motor—Considering next the two cylinder motor, the only type that has been used to any extent for automobile work is that in which the cylinders are located horizontally on opposite sides of the crankshaft, the latter having double throws. Although such motors have been made with two cylinders exactly in line with each other, generally they are slightly displaced sidewise with relation to each other. Since the two pistons start simultaneously from the outer end of the stroke (which corresponds to the top end in a vertical motor) their velocities are always equal, and since the two sets of reciprocating parts are equal in weight their inertia effects would neutralize each other if it were not for the slight sidewise displacement of the two cylinders. As it is, the forces form a couple in a horizontal plane, proportional to the distance between the cylinder centre lines. The moving parts in such a motor are thus very nearly balanced, and since the range in the torque reaction for a motor of a given output is much smaller than in the single cylinder motor, especially at low speed, a double cylinder opposed motor runs relatively free from vibration.

Two cylinder vertical motors were used to quite an extent in the past, but have now been entirely discarded. There are two possible arrangements. The two pistons may either work on a single crank, in which case the explosions in the two cylinders will be equally spaced, but there will be a large unbalanced inertia force, since the two pistons move up and down together; or, the two pistons may act on cranks set opposite or at 180°, in which case one explosion will follow another after one stroke and then there will be an interval corresponding to three strokes before another explosion occurs. In the latter construction the reciprocating masses will be partly balanced, since one set moves up while the other moves down. But the instantaneous velocities will, of course, always be different; and, besides, the two reciprocating masses are located at a considerable distance apart and produce, therefore, a rather strong couple.

V Type Motor.—Two cylinder motors with the cylinders set at an angle of 90 degrees (and sometimes less) are used to quite an extent on motorcycles and the lightest types of four wheeled

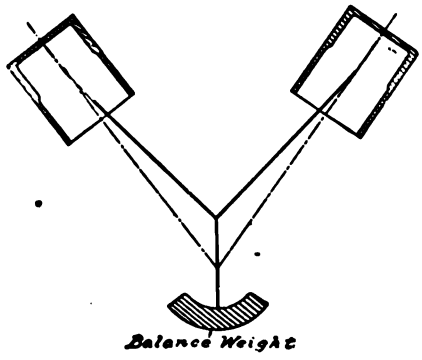

FIG. 27.

vehicles. They are known as V type motors and have a relatively good balance, considering the small number of cylinders.

We have in such a motor two sets of reciprocating parts moving at right angles to each other, so that if one set moved vertically up and down, the other would move horizontally back and forth. The primary unbalanced forces of the two sets of reciprocating masses, each of which is represented by a sine curve, combine to make a single constant radial rotating force which can be balanced by means of suitable balance weights placed on the crank arms opposite the crank pin, as shown in Fig. 27. Hence the primary unbalanced force is eliminated in the two-cylinder V motor, but the secondary unbalanced force, which has a frequency twice that of crankshaft rotation, remains.

Four Cylinder Motor—In a four cylinder motor the two inside pistons work on cranks in the same plane, and the two outside pistons on cranks directly opposite the former (Fig. 28). The two inside pistons then always move up and down together, and the two outside pistons at all times move in the opposite direction to the inside pistons. The centre lines of motion of the two sets

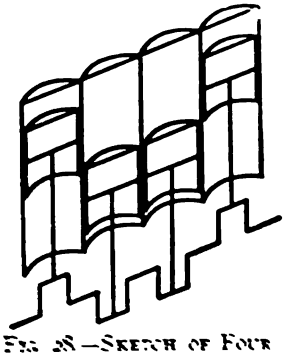

FIG. 28.—SKETCH OF FOUR CYLINDER ENGINE.

FIG. 29.—SKETCH OF SIX CYLINDER ENGINE.

of reciprocating masses coincide. However, although the two sets of reciprocating masses are equal in weight and always move in opposite directions, the inertia forces do not completely neutralize each other, for the reason that, as already explained, the pistons travel slower when the crank is a certain angular distance from the lower dead centre than when it is the same angular distance from the top dead centre.

If we represent the momentary inertia force due to the reciprocating masses in one cylinder by

$$c \quad (\cos\theta + \frac{1}{2n}\cos 2\,\theta)$$

where $c = 0.0000142\ W\ l\ N^2$,

then the force due to any two cylinders whose reciprocating masses are in phase —— say the two outside cylinders—is twice this, or

$$2\,c\,(\cos\theta + \frac{1}{2n}\cos 2\,\theta).$$

The inertia force due to the reciprocating masses of the two inner cylinders is

$$2\,c\left[\cos\,(\theta + 180°) + \frac{1}{2n}\cos 2\,(\theta + 180°)\right]$$
$$= 2\,c\,(-\cos\theta + \frac{1}{2n}\cos 2\,\theta).$$

Since the center lines of both these forces coincide we can add the forces together, which gives

$$F_4 = \frac{2\,c}{n}\cos 2\,\theta.$$

We see, therefore, that in a four-cylinder engine the primary unbalanced force is eliminated, and only the secondary unbalanced force, whose frequency is twice that of crankshaft rotation, remains. The degree of balance is therefore the same as that of the two-cylinder V engine.

In Fig. 30 are shown the reactions on the engine frame due to the inertia forces of the reciprocating masses. The inertia forces on the two sets of reciprocating masses are shown in dotted lines, and the resultant of the two is shown in a full line. Upward reactions on the engine frame are plotted above the horizontal axis and downward reactions below the horizontal axis.

Lanchester Anti-Vibrator.—F. W. Lanchester, an English automobile engineer, has devised a method of balancing the secondary unbalanced force, the device employed by him being known as an anti-vibrator. Two sectional views of the arrangement for a four-cylinder motor are shown in Fig. 31. To one of the short crank arms adjacent to the central main

journal of the crankshaft is secured a helical gear, which meshes with another helical gear of half the number of teeth located in the bottom of the crank case transversely across

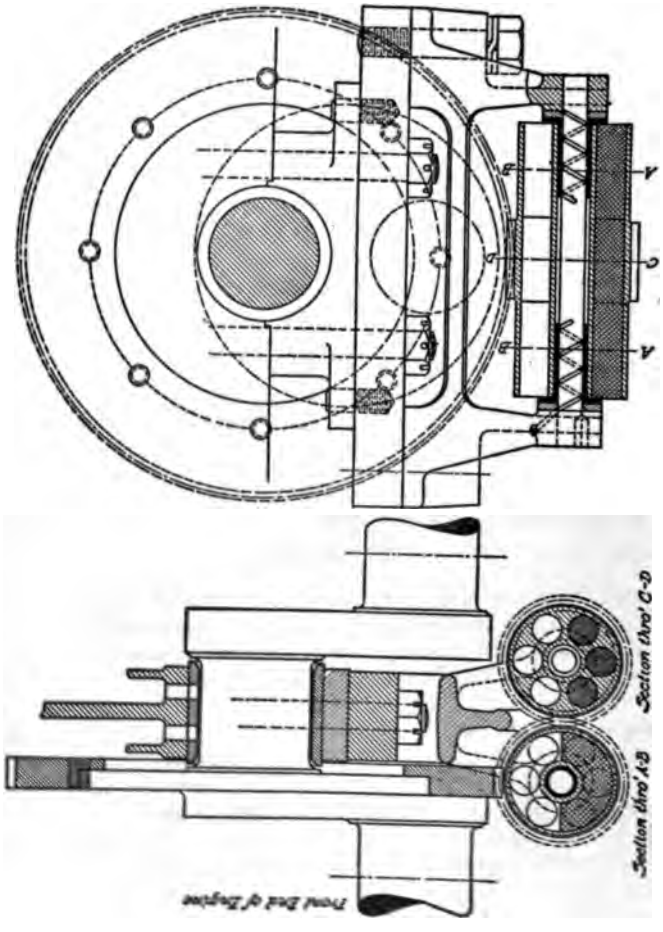

FIG. 31—LANCHESTER ANTI-VIBRATOR.

the engine. This latter gear meshes with another similar one lying parallel to it. The two like gears are cut on the periphery of revolving cylinders fitted with bearing bushings

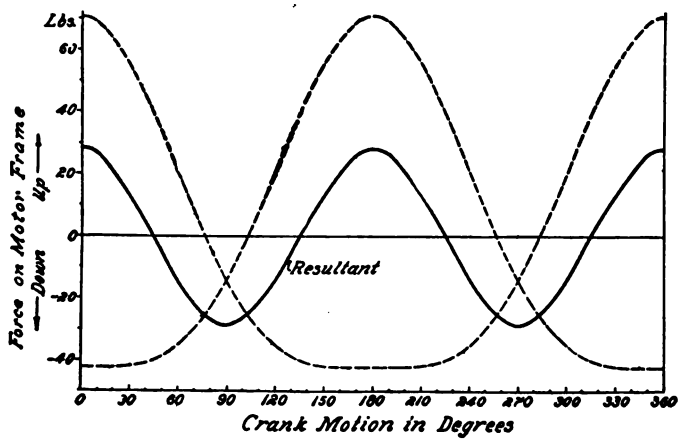

FIG. 30.—FOUR CYLINDER INERTIA FORCE DIAGRAM.

and mounted on stationary studs. The cylinders are drilled each with six holes parallel to their axes, three of the holes being filled with lead and the others left empty so that the effect is the same as that of a revolving balancing weight. These two balancing weights revolve at equal speed (twice

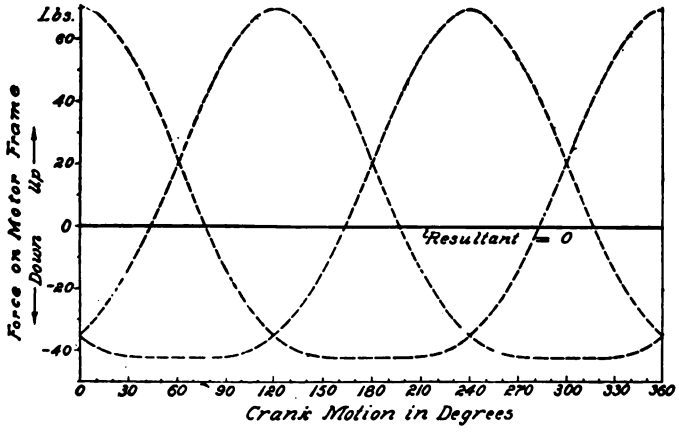

FIG. 32.—SIX-CYLINDER INERTIA FORCE DIAGRAM.

crankshaft speed) in opposite directions, and they are so meshed together that the horizontal components of their respective centrifugal forces neutralize each other while the vertical components add together. Every time a pair of pistons starts on the down stroke the revolving balance weights are in the position shown in the figure, the centrifugal force on them is directed downwardly, while the secondary unbalanced force on the reciprocating parts is directed upwardly and is at a maximum. The weights are so proportioned that the two forces exactly neutralize each other.

The turning moment in a four cylinder motor, especially at moderate speeds, is very much more nearly uniform than that of a two cylinder motor, hence the torque reaction and the vibration due to it are very much smaller. On the whole the four cylinder motor, when properly constructed, meets the requirement of vibrationless running quite satisfactorily.

Six Cylinder Motor—In a six cylinder motor the pistons act on cranks set two and two together at angles of 120°, pistons Nos. 1 and 6 connecting to cranks in the same plane, also pistons Nos. 2 and 5 and pistons Nos. 3 and 4 (Fig. 29). Using the same notation as above, the inertia forces due to the reciprocating masses in the three pairs of cylinders, respectively, are

$$2\,c\,(\cos\theta + \frac{1}{2n}\cos 2\,\theta),$$

$$2\,c\,[\cos(\theta + 120°) + \frac{1}{2n}\cos 2\,(\theta + 120°)]$$

and

$$2\,c\,[\cos(\theta + 240°) + \frac{1}{2n}\cos 2\,(\theta + 240°)]$$

All act along the same center line, hence, adding them together, we have

$$F_a = 2\,c\,[\cos\theta + \cos(\theta + 120°) + \cos(\theta + 240°)]$$
$$+ \frac{c}{n}[\cos 2\,\theta + \cos 2\,(\theta + 120°) + \cos 2\,(\theta + 240°)]$$
$$= 2\,c\,[\cos\theta + \cos\theta\cos 120° - \sin\theta\sin 120° + \cos\theta\cos 240° - \sin\theta\sin 240°] + \frac{c}{n}(\cos 2\,\theta + 2\cos\theta\cos 240° - 2\sin\theta\sin 240° + \cos 2\,\theta\cos 480° - \sin 2\,\theta\sin 480°)$$
$$= 2\,c\,[\cos\theta\,(1 + \cos 120° + \cos 240°) - \sin\theta\,(\sin 120° + \sin 240°)] + \frac{c}{n}[\cos 2\,\theta\,(1 + \cos 240° + \cos 480°) - \sin 2\,\theta\,(\sin 240° + \sin 480°)].$$

Now, in the last equation each of the four terms in parentheses is equal to zero, hence the whole expression is equal to zero and the inertia forces are balanced. In Fig. 32 are shown curves representing the inertia forces due to each pair of reciprocating parts, and it is there proven graphically that the resultant is zero.

The variation in the crankshaft turning moment, and consequently in the torque reaction, is also much smaller than in any engine with a smaller number of cylinders, the total range of turning moment being 1.62 the average turning moment in the case of the six-cylinder motor, while in the four-cylinder motor it was 5 times the average turning moment. Consequently a six-cylinder motor may be made to run exceedingly smoothly. To insure this excellent balance it is, of course, necessary that all reciprocating parts be made of standard weight; that is, each piston must weigh the same as every other piston, and the same with respect to the connecting rods.

Torsional Vibration.—When six-cylinder engines were first introduced it was found that in spite of the absolute balance of their reciprocating parts they were subject to excessive vibration at certain high speeds. The fact that vibration was limited to certain narrow ranges of engine speed made it obvious that the cause of the phenomenon lay in synchronism at these high speeds between vibration producing impulses and the natural rate of vibration of the crankshaft. It is now believed that these vibrations are due to the great torsional flexibility of the long crankshaft, which makes its natural period of swing comparatively low. Obviously the rear end of the crankshaft is restrained from rapid acceleration by the inertia of the flywheel, hence when the torsional moment exerted on, say, the most forward crank pin is suddenly increased, as by an explosion in the forward cylinder, the crankshaft will twist slightly. A moment later, as the torsional moment on the crank pin decreases, the crankshaft will "unwind," owing to its torsional elasticity. Then the torsional moment on some other crank pin will increase and cause the crankshaft to "wind up" again. The theory of the phenomenon of torsional vibration has never been fully explained, but it appears from an investigation made by the writer that in a six-cylinder engine torsional vibration is most pronounced if the period of a complete cycle of torsional swing of the crankshaft is equal to two-thirds the time of one engine revolution.

Lanchester Vibration Damper.—The simplest method of eliminating trouble due to torsional vibration is to increase the diameter of crank pins and crank main journals, and the dimensions of the crank arms in proportion. This reduces the period of natural vibration of the crankshaft and brings its critical speed beyond the speed range of the engine. F. W. Lanchester has also invented a device for overcoming torsional vibration. It consists (Fig. 33) of a small flywheel placed at the forward end of the engine, supported by the crankshaft, but not rigidly fastened thereto. It is held between friction discs, which are pressed together by springs. When the engine runs at the critical speed there will be the same tendency for the crankshaft to "thrash" as if the vibration damper were not used. But the damper has a great deal of inertia, and any sudden variation in the motion of the

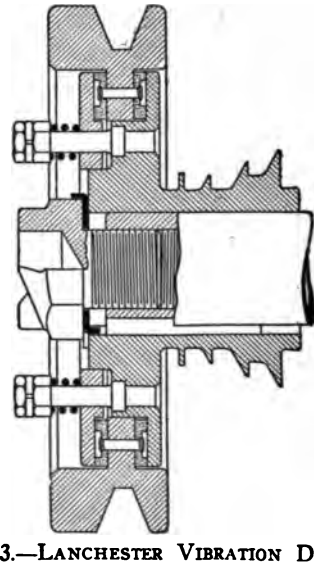

FIG. 33.—LANCHESTER VIBRATION DAMPER.

forward end of the crankshaft will cause the friction plates of the vibration damper to slip. Such slippage, of course, absorbs energy. Without the vibration damper there is very little resistance to torsional vibration, as steel within its elastic limit is perfectly elastic, so that any energy imparted to it setting it in vibration will keep it vibrating for a considerable time. A frictional dampening device, on the other

hand, will absorb the energy stored in the crankshaft by fluctuations in the torque and thereby minimize the vibration.

Eight Cylinder Motor—An eight cylinder V type motor consists essentially of two four cylinder motors placed at right angles to each other (the usual arrangement). Each of these motors has an unbalanced force in the central plane of its cylinders, as represented by Fig. 30.

We found that the expression for the unbalanced force in a four-cylinder motor is

$$\frac{2\,c}{n} \cos 2\,\Theta.$$

In an eight-cylinder motor we have two such forces acting at right angles to each other. Considering a motor revolving right-handedly, looked at from the front, if we use the above expression to designate the unbalanced force due to the reciprocating parts in the left-hand set of cylinders, then the unbalanced force due to the reciprocating parts in the right-hand set of cylinders is

$$\frac{2\,c}{n} \cos 2\,(\Theta - 90°)$$

$$= \frac{2\,c}{n} \cos\,(2\,\Theta - 180°)$$

$$= -\frac{2\,c}{n} \cos 2\,\Theta.$$

Now, since these two forces do not act along the same line we cannot add them directly. They act along intersecting lines, each making an angle of 45 degrees with the vertical. But the vertical components of both forces act along the same line, and so do the horizontal components, hence we may derive the horizontal and vertical components of each of these forces and then add like components together. We will call forces to the right and upward forces positive, and forces to the left and downward forces negative. We then have—

Vertical component of forces due to left-hand set of reciprocating parts

$$C_{vl} = \frac{2\,c}{n} \cos 2\,\Theta \cos 45°.$$

Vertical component of forces due to right-hand set of reciprocating parts

$$C_{vr} = -\frac{2\,c}{n} \cos 2\,\Theta \cos 45°.$$

The resultant of these two forces is evidently zero, hence there is no vertical unbalanced force.

The horizontal components are as follows:

Due to left-hand set of reciprocating parts—

$$C_{hl} = \frac{2\,c}{n} \cos 2\,\Theta\ (-\sin 45°).$$

Due to right-hand set of reciprocating parts—

$$C_{hr} = -\frac{2\,c}{n} \cos 2\,\Theta\ (\sin 45°).$$

Adding the two together we find the resultant to be

$$-\frac{2\,c}{n} \cos 2\,\Theta\ (2 \sin 45°)$$

$$= -1.414\ (\frac{2\,c}{n} \cos 2\,\Theta).$$

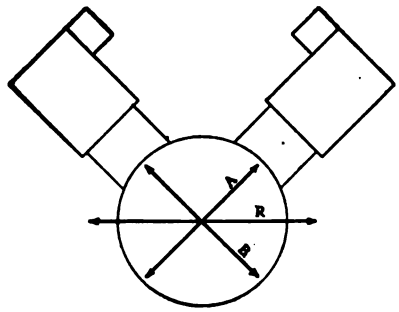

FIG. 34.—INERTIA FORCE IN EIGHT-CYLINDER V ENGINE

A—Unbalanced force of right-hand set of cylinders.
B—Unbalanced force of left-hand set of cylinders.
C—Resultant unbalanced force.

Hence the resultant unbalanced force in an eight-cylinder engine is in a horizontal plane, and its maximum value is equal to 1.414 times that of a four-cylinder engine of the same cylinder dimensions (and therefore, about one-half the output). How the two inclined inertia forces combine to make a horizontal unbalanced force is shown in Fig. 34.

Twelve-Cylinder V-Motor.—The twelve-cylinder V-type motor consists essentially of two six-cylinder motors set at an angle of 60 degrees. Pistons of oppositely located cylinders act on the same crank pin, and the crankshaft is the same as in a six-cylinder engine. The angle of 60 degrees is chosen to obtain uniformly spaced explosions. Since there are twelve explosions in two revolutions, or 720 degrees of crank travel, for even spacing successive explosions should evidently come $\frac{720}{12} = 60$ degrees apart. Since each six-cylinder unit of the twelve is in perfect balance, it follows that the complete engine is perfectly balanced so far as inertia forces due to reciprocating parts are concerned. The "twelve" is also subject to torsional vibration, and what was said regarding this matter in connection with six-cylinder motors applies here.

CHAPTER VI.

THE CYLINDER.

Horizontal versus Vertical Cylinders—In the early years of the automobile industry in this country, when single cylinder motors were used almost exclusively, the cylinders were generally placed horizontally. Later on, when the number of cylinders was increased, the vertical arrangement was adopted, because a vertical multicylinder motor requires less room on the chassis and can be arranged more accessibly and more symmetrically. It also possesses certain advantages with respect to lubrication. The horizontal arrangement is retained, however, in the case of the double cylinder motor, in which the cylinders are placed on opposite sides of the crankshaft, on account of the good balance thus obtained. It was often urged against the horizontal motor that the weight of the piston had a tendency to wear the cylinder bore oval, but it can easily be shown that in comparison with the side thrust of the piston on the cylinder wall due to the angularity of the connecting rod, the piston weight is absolutely negligible, and this feature had nothing to do with the abandonment of the horizontal motor.

Arrangement of Valves—The cylinder of a gasoline motor may be given many different forms, the differences depending chiefly upon the location of the valves. In designing a cylinder or group of cylinders, there are two main factors to be kept in view, viz., the form of the combustion chamber and the means of actuating the valves from the crankshaft. The combustion chamber should have the least wall surface in proportion to its cubical contents, as the loss of heat through the walls depends very largely upon the extent of this surface. This consideration would lead to the adoption of a spherical combustion chamber, for of all geometrical forms the sphere has the least surface area for a given volume. This ideal form of combustion chamber is approached in the Knight sleeve valve

motor. With poppet valves the nearest approach to an ideal combustion chamber is obtained when both inlet and exhaust valves are located in the cylinder head at an angle of 30 to 45 degrees, the cylinder head being made of hemispherical form, or domed. The piston head can, of course, also be hollowed out, as it is in the Silent Knight motor, but this is seldom done. The next best arrangement from this point of view is that denoted by 3 in Fig. 35, where both valves are located in the cylinder head side by side and parallel. This gives a cylindrical form of combustion chamber. Next follow the arrangements 2, 4 and 6, which are about equal. In arrangement 2 the inlet valve is located directly above the exhaust valve in a side pocket and opens downwardly. In arrangement 4 the inlet valve is located in the centre of the cylinder head, and the exhaust valve in a side pocket, while in arrangement 6 the two valves are located opposite and in line with each other in a valve pocket formed on the cylinder head. In each of these cases there is a valve pocket the size of which is determined by the size of one valve head. These pockets naturally add considerably to the wall surface for a given combustion space volume. Next in order of combustion space wall area comes the arrangement 7, with both valves in a single pocket on the side of the cylinder, and finally that denoted by 1, with the inlet and exhaust valves in side pockets on opposite sides.

Minimum wall area is, however, only one consideration in the design of a cylinder, and, in the estimation of many designers, by no means the most important. Upon the arrangement of the mechanism for actuating the valves depends to a large extent the more or less noiseless operation of the motor, as well as its general appearance, and, to some extent, its ability to run at high speeds and to give a large output in proportion to its dimensions. This mechanism is of the simplest form when both valves are located in a single side pocket, in which case only a single camshaft for operating the valves, and a single set of camshaft gears are needed. The camshaft is placed directly underneath the valve chamber and the valves are lifted by direct thrust. With the valves in pockets on opposite sides the method of operation is similar, but two camshafts and two sets of camshaft gears are required. When the valves are arranged in an inverted position, as when they are located in the cylinder head or when the inlet valve is located above the exhaust valve, a more complicated intermediate mechanism is required, with more chances for devel-

oping play at the joints. Sometimes in multicylinder motors the camshaft extends centrally across the tops of the cylinders, being driven from the crankshaft through an intermediate vertical shaft or through a silent chain, but more frequently there are a series of vertical valve rods at the sides of the cylinder, which are moved upward by the cams, and the direction of motion is then changed by short tappet levers whose arms bear against the valve stems and the valve rods respectively. From the viewpoint of simplicity of valve gear, arrangement 7 is undoubtedly the most advantageous. The T head motor (arrangement 1), on the other hand, permits of using larger valves.

Another question that affects the problem of valve location

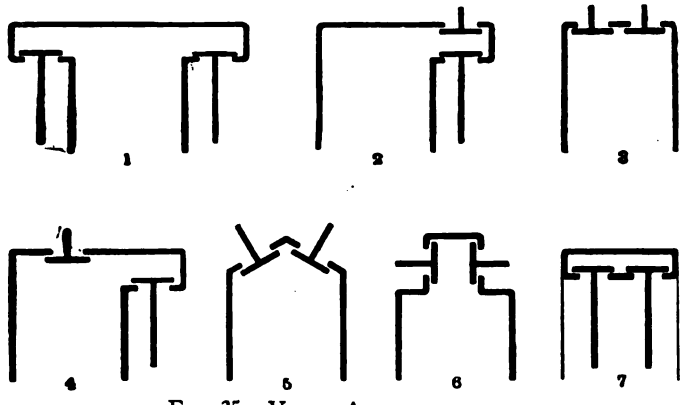

FIG. 35.—VALVE ARRANGEMENTS.

is that of effective cooling of the valve seats. A good many cylinders are made with their heads integral, and if the valves were to be located in the head and the seats for the valve formed in the metal of the cylinder casting, whenever it was necessary to remove a valve, or to grind it in, the entire cylinder or group of cylinders would have to come off the base. This is obviously impracticable, and the necessity for it is obviated by inserting cylindrical shells, known as valve cages, into the cylinder heads, on which the valve seats are formed. Unfortunately, when the valve seat is on an inserted cage it cannot be cooled as effectively as wher it is in the cylinder casting itself, for the simple reason that the heat in traveling from the valve seat to the water jacket must pass a joint between two metal parts. The reduced cooling power is

of no consequence in the case of the inlet valve, which is kept cool by the fresh charge passing through it, but the exhaust valve will heat more and has to be reground more frequently when operating in a cage than when seated on the cylinder casting directly.

A cylinder with valves in the head will give more power than a cylinder with valves in side pockets, of the same dimensions. According to Enrico Giovanni, chief engineer of the Fiat Automobile Works of Turin, Italy, the valve-in-the-head motor gives as much as 20 per cent. more power than a T-head motor of the same bore and stroke. Nevertheless, for touring car motors he prefers the T-head type; for one reason, because the spark plugs can be located in the inlet valve chamber, where there is always a pure charge, and thus ignition can be effected when the motor is greatly throttled. In other words, a T-head motor can be run at a lower idling speed than a valve-in-the-head motor. The valves can also be more easily removed. The valve-in-the-head motor, however, on account of its greater power output, is now used almost exclusively for special racing machines. One other advantage of this type of motor is that the entire combustion chamber can be machined, which permits of accurately equalizing the compression volumes in the different cylinders, and of polishing the walls of the combustion chamber with a view to preventing the accumulation of carbon and consequent pre-ignition.

Other considerations that come up in the determination of the most suitable valve arrangement are the attachment of the admission and exhaust pipes and the easy enclosure of the valve mechanism. In weighing the advantages and disadvantages of the various arrangements against each other, different designers naturally reach different conclusions. The following statistics gathered at recent shows will be of interest in this connection. Of the American pleasure car models for the 1915 season, 75 per cent. had L head motors, 20 per cent. T head motors and 5 per cent. valve-in-head motors. Since that time the L head motor has made still farther progress. European designers turned to the L head type of cylinder, sometimes known as the Renault type, at an earlier date than we did in this country, as is indicated by the fact that of the engines at the Olympia show in London in 1910, 78 per cent. were L head motors.

The valve arrangements shown in Fig. 35 are all suitable for vertical motors. With horizontal motors arrangement 7

with the two valves side by side on top of the cylinder, is almost universally used.

Cylinder Grouping—In motors with more than one cylinder the cylinders may be cast either singly, all in one "block," or in two or more dual or triple units. Since no two cylinder motors except the opposed type are at present being used in automobile work, the question of cylinder grouping arises only in connection with four to twelve cylinder motors. The use of separately cast cylinders for "fours" and "sixes" has been practically abandoned. The advantages of multicylinder blocks over twin cylinders are practically the same as the advantages of twin over single cylinders. By casting all of the cylinders in a single block the over-all length of the motor is reduced and the construction generally is simplified. In a four cylinder motor, for instance, when separately cast cylinders were used, it was customary to have five supporting bearings for the crankshaft; with twin cast cylinders three crankshaft bearings are generally used, and with all four cylinders cast in a single block the crankshaft is often supported in only two bearings, one at either end. In this way the weight, as well as the bulk, of the motor is reduced Another effect of casting several cylinders in a single block is that the connections are greatly simplified. In a four cylinder block motor the jacket spaces for all four cylinders are in one, hence there need be only one cooling water inlet and one outlet, against four of each in the case of a motor with separately cast cylinders. Moreover, in a "block" motor the inlet and exhaust manifolds may be cast integral with the cylinders, in which case there is only one inlet and one exhaust pipe connection. Such a motor is of exceedingly "clean cut" appearance. A further advantage of block construction resides in the fact that a housing for the valve springs may be cast integral with the cylinder block, so that by merely fitting a plain cover plate the entire valve mechanism may be neatly encased.

The disadvantage of block construction is that if a single lefect occurs in a casting either while it is being machined or later in service, the entire block may possibly have to be thrown away, instead of only a single cylinder. The block cylinder is naturally more difficult to cast than the single cylinder, but the technique of foundry work has been greatly

improved in recent years and there are now many foundries turning out block motors with integral manifolds. Owing to the more difficult work and greater loss from "wasters," founders charge a somewhat higher price for block cylinders than for single cylinders, pound for pound. The disadvantages of block construction are most apparent when a defect is found in a casting after the machining has been completed or if the workman spoils a casting at this stage; if a cylinder bore is ruined by failure of the lubrication or other cause, or a cylinder wall is cracked by freezing of the jacket in cold weather.

It will be seen that the advantages of block construction are fundamental or inherent, while its disadvantages are largely dependent upon "the state of the art." These disadvantages vanished as experience accumulated, lubricating methods were rendered more reliable and means for repairing injuries to cylinders were installed in many repair shops. Therefore, as was to be expected, in four cylinder engines of moderate output block cylinder construction superseded twin cylinder construction, the same as twin cylinders at an earlier period superseded separately cast cylinders. Of American 1915 model four cylinder pleasure car engines 70.4 per cent. had their cylinders cast en bloc; 23.5 per cent. in pairs and 6.1 per cent. singly. Of the six cylinder engines 40.5 per cent. had their cylinders cast en bloc; 26.6 per cent. in threes; 30.4 per cent. in twos and 2.5 per cent. singly. Eight and twelve cylinder engines employ en bloc construction exclusively, which is probably explained by the generally very small size of their cylinders.

Cylinder Material—Automobile engine cylinders are generally cast from close grained gray iron approximating the following composition:

	Per Cent.
Carbon	3.25
Silicon	2.00
Phosphorus	0.75
Manganese	0.50
Sulphur—not to exceed	0.10

Such iron has a minimum tensile strength of 24,000 pounds per square inch and pours well. The use of steel for cylinders has often been suggested, and for racing and flying machine

motors cylinders are occasionally worked out of the solid steel billet. One American manufacturer uses cylinders cast from semi-steel. Of late years a material known as vanadium iron has come into use to some extent for cylinder castings. Vanadium present in small quantity in the iron ore accomplishes the same result as when incorporated into steel; that is, it eliminates some of the objectionable impurities, acting as a "purger."

Following are the compositions of domestic and foreign cylinder irons respectively, as required by the specifications of one large American concern:

DOMESTIC IRON CASTINGS.

		Per Cent.
Silicon		1.25 to 1.60
Sulphur	less than	0.11
Phosphorus		0.50 to 0.80
Manganese		0.50 to 0.80
Combined carbon	over	0.40
Graphitic carbon	under	3.00

IMPORTED CYLINDER CASTINGS.

Silicon		2.50 to 3.00
Sulphur	under	0.10
Phosphorus		1.50 to 1.80
Manganese		0.30 to 0.50
Combined carbon	over	0.50
Graphitic carbon	under	3.00

Among the other points covered by these specifications are the following: Castings must be made from hard close grained iron; free from shrinkage cracks, spongy spots, blow-holes and foreign substances; true to pattern and must not develop any defects in machining. Drillings taken from several castings from each day's cast for analysis must show the above composition. When specified on the drawing, the maker's brand or trademark and date of pouring must be cast in raised figures on every casting at the place designated on the drawing. The order and requisition numbers must be painted on each casting with white lead. The manufacturer must furnish two test pieces 1¼ inches in diameter by 14 inches long to represent each day's work. The date upon which these are cast must be shown in raised figures on each test piece. The test pieces should be cast at different times during the pouring period, and the analysis of the test pieces must agree (within reasonable limits) with castings made that day. Castings not within the weight limits given on the drawings and failing to meet the above requirements will be rejected and returned.

Cylinder Stresses and Wall Dimensions—In calculating the maximum stresses which may occur in a gasoline engine cylinder, account must be taken of the fact that if one or more

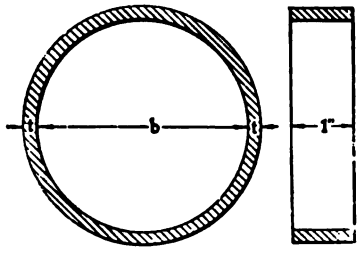

FIG. 36.

charges should be "missed" (i. e., fail to ignite) all of the spent gases will be pumped out of the cylinder, and the next charge to fire will be stronger in the proportion of the piston displacement plus compression volume to the piston displacement. Therefore, although the normal explosion pressure in an automobile motor averages about 300 pounds per square inch, it will be well to figure on abnormal explosion pressures o. 400 pounds per square inch.

Now, consider a section of a cylinder of b inches bore 1" inch long (Fig. 36). The pressure developed in the cylinder by the explosion tends to rupture the cylinder wall along lines parallel with the centre line and at opposite ends of a diameter. The rupturing force for the section of the cylinder considered is evidently 400 b pounds (considering the explosion pressure to be 400 pounds per square inch). If the cylinder wall has a thickness t and its material has a tensile strength of 24,000 pounds per square inch, the resistance to rupture of the two sections 1 inch long and t inch thick is

$$2 \times t \times 24{,}000 = 48{,}000\ t \text{ pounds.}$$

Calling the factor of safety f, we have

$$f = \frac{48{,}000\,t}{400\,b} = 120\,\frac{t}{b}$$

If we allow a factor of safety of 4, then

$$4 = 120\,\frac{t}{b}$$

and

$$t = \frac{b}{30}\ \textit{inch.}$$

This formula when applied to cylinders of small bore gives values for the cylinder wall thickness which, while large enough so far as withstanding the stresses of explosion is concerned, would be too small from the standpoint of shop production. If the water jacket is cast integral, as it usually is, the cylinder can be machined only on the inside, and the minimum thickness of the wall then depends upon the accuracy with which the cores are set. Some allowance must be made for inaccurate core work. From the data of 18 modern

motors of both American and European construction the following formula for wall thickness has been derived:

$$t = \frac{b}{30} + \tfrac{1}{8}\ inch \qquad (32)$$

While the motors from which the data were taken ranged in bore only from 3 to 5 inches inclusive, the formula may safely be applied to a much wider range of sizes. The nearest size in thirty-seconds of an inch to the result given by the formula should be chosen. If the cylinder becomes worn in the course of use, or damaged by lack of lubrication or on account of the piston pin coming adrift, it may be saved by regrinding. In the case of ordinary wear an increase in the diameter of 0.010 inch is usually sufficient, but in cases of scoring the diameter must sometimes be enlarged as much as 0.040 inch. Some manufacturers make it a practice to furnish over-sized pistons to be fitted into reground cylinders, and the Society of Automobile Engineers has standardized these pistons, which are made 0.010, 0.020, 0.030 and 0.040 inch over-size. Wall thicknesses as given by the above formula admit of such regrinding.

The cylinder head is usually made of the same thickness as the cylinder wall. If it were of hemispherical form its factor of safety would be the same as for the cylinder wall. The head usually approaches the hemispherical form near its edges where the strain is the greatest, and flattens out toward the centre. However, in T-head cylinders it is generally made flat, owing to the difficulty in bringing the clearance volume down to the required point. The water jacket usually extends down the cylinder to a point even with the top edge of the piston when in its lowest position. Some make the jacket shorter, while a few make it longer. The width of the water space varies a great deal in different designs, and no relation between the width of the water space and the bore of the cylinder is recognizable in the data at hand. The widths vary between $\frac{5}{16}$ and ¾ inch. A good rule would be to make the jacket ½ inch wide for cylinders from 3 to 4 inches, ⅝ inch for cylinders above 4 and up to 5 inches and ¾ inch above 5 inches. Liberal water spaces have the advantage that the core sand can be more effectively removed from the casting.

The jacket wall is generally made as thin as the foundry process permits of. It can, of course, be made thinner in a small cylinder than in a big one, because in the former the area is smaller. The average practice is to make the jacket wall thickness

$\frac{3}{32}$ inch for a 3 inch bore;
$\frac{1}{8}$ inch for a 4 inch bore;
$\frac{5}{32}$ inch for a 5 inch bore;
¼ inch for a 6 inch bore.

On top of the cylinder a liberal water space is generally allowed, from ¾ to 1½ inches, according to the cylinder bore.

In a single cylinder the cylinder wall is sometimes made $\frac{1}{16}$ inch thicker below the jacket, or at least it is gradually thickened as the flange at the lower end is approached. The lower end of the cylinder does not have to withstand the direct stresses of explosion, but instead it is subjected to the tension due to the explosion pressure against the cylinder head and to the shearing and bending stresses due to the torque reaction or to the side thrust of the piston against the cylinder wall. It has been shown by James Angelus that if the cylinder wall is made sufficiently thick to withstand the direct bursting pressure of the explosion it is sufficiently strong to withstand the combined tension, bending and shearing stresses near its lower end; but, possibly owing to strains set up in the metal at the joint in cooling, and possibly because one or more of the nuts on the bolts may loosen, single cylinders sometimes break at the flange, and a slight increase in thickness toward the bottom end seems advisable.

A single cylinder is secured to the crank case by means of four studs and nuts equally spaced. The proper diameter for the studs may be found by means of the equation

$$d = \frac{b}{12} + \tfrac{1}{4}\ inch \qquad (33)$$

Where the nuts come there should be bosses on the flange ⅛ to ¼ inch high, finished off to insure a square seat for the nuts.

Compression Space—We will suppose that the bore and stroke of the motor and the type of cylinder have been decided upon. The power output to be expected from a cylinder of given dimensions and the relation of bore to stroke will be discussed in later chapters. A design for a T-head cylinder of 4 inch bore and 5 inch stroke is shown in Fig. 37. The two valves are shown to have a clear diameter of 1¾ inch each. We will suppose that the compression ratio is 4.25. The piston displacement volume is

$$4 \times 4 \times 5 \times 0.7854 = 62.83 \text{ cubic inches,}$$

and with a compression ratio of 4.25 the volume of the compression space must be

$$\frac{62.83}{4.25 - 1} = 19.33 \text{ cubic inches.}$$

In laying out the compression space care must, of course, be taken

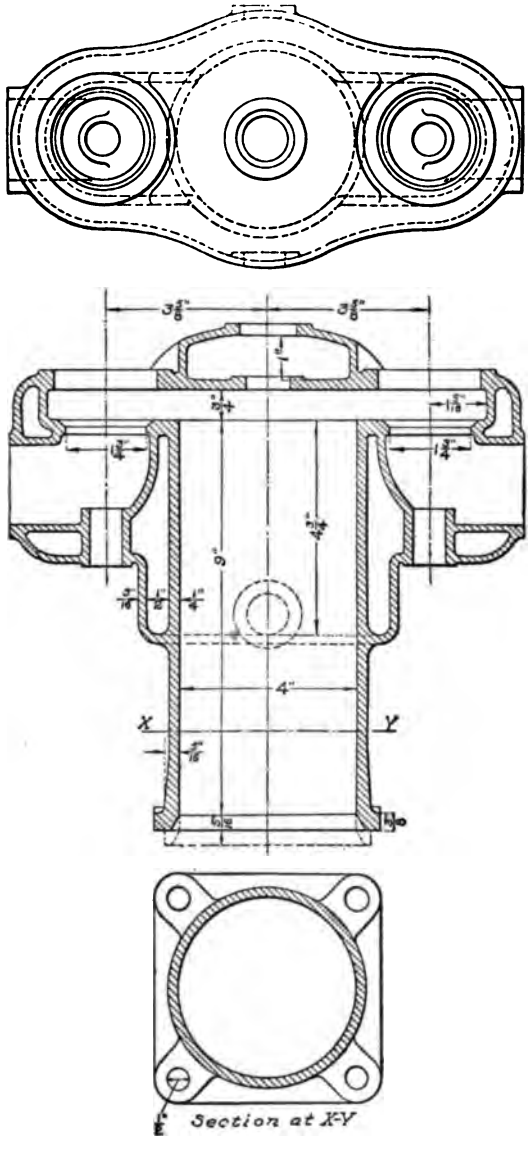

FIG. 37.—SINGLE T-HEAD CYLINDER.

that there is a free passage for the gas from and to the valves. With a clear diameter of the valve port of 1¾ inches, the outside diameter of the valve head would be, say, 2⅛ inches, and the valve stem would be $\frac{7}{16}$ inch in diameter. The effective opening of the valve port would then be

$$(1\tfrac{3}{4}^2 - \tfrac{7}{16}^2)\ 0.7854 = 2.25 \text{ square inches.}$$

Now, one-half of the valve head is surrounded by the valve pocket wall at a fixed distance, and in order that the annular space between the valve head and the valve pocket wall may be equal in area to the corresponding portion of the valve port area, the diameter x of the valve pocket must be such that

$$(x^2 - 2\tfrac{1}{8}^2)\ 0.7854 = 2.25,$$

from which we find

$$x = 2.71 \text{ inches.}$$

It is, however, not necessary to have the annular space quite as large as the valve port area, for as soon as the incoming gas, for instance, has passed through the valve port it is drawn toward the cylinder, and less passes around the outer half of the valve head than around the inner half. We will, therefore, make the valve pocket of 2⅝ inch diameter instead of 2.71 inches. This will leave a free space of ¼ inch all around the valve head.

The form of the compression space is shown in Fig. 38. The area of one head of the compression space is 27.81 square inches. If we made the space of a uniform height of ¾ inch, then the volume would be 20.86 cubic inches, or 1.53 cubic inches more than required for the compression volume. In order, therefore, to get the right compression volume the piston when in its topmost position should extend into this space a distance

$$\frac{1.53}{12.56} = \tfrac{1}{8} \text{ inch approximately.}$$

It is very desirable that the piston should over-travel the top end of the finished bore a short distance, so that no shoulder may be worn in the bore. An over-travel of ⅛ inch will be about right.

The cross section of the passage connecting the valve chamber with the cylinder is

$$2\tfrac{5}{8} \times \tfrac{3}{4} = 1.97,$$

or nearly 2 square inches, which is slightly less than the area of the valve seat port. For T-head cylinders it is good practice to make the inner diameter of the valve pocket 50 per cent. greater than the clear valve diameter and the height of the pocket 40 per cent. of the clear valve diameter, or a little more, according to the compression ratio desired.

While on this subject, it may be of interest to calculate the

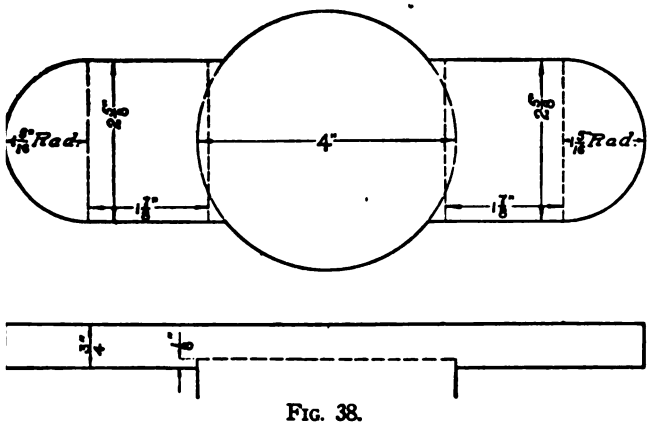

FIG. 38.

ırface area of a compression chamber of this form, as com-
ıred with a compression chamber of cylindrical form of about
.e same diameter as the bore. As already stated, the head of
e compression chamber has an area of 27.81 square inches.
he circumference of the compression space is approximately
.35 inches, which with a height of ¾ inch gives a circumferen-
ıl surface of 16.76 square inches. Adding this to the 55.62
uare inches of the heads gives a total of 72.38 square inches
:a. On the other hand, if the combustion space was in the
m of a cylinder of 4 inches diameter, the required height
uld be 1.56 inches, and the surface area would be 44.71 square
ıes. With the T-head the surface area of the combustion
mber is, therefore, about 62 per cent. greater than it should
with a valve in the head motor and cylindrical combustion
nber.

'here a high compression ratio is to be used, together with
: valves, it is sometimes difficult to get the combustion cham-
sufficiently small. One of the expedients resorted to in such
ı is to have the cylinder head slope downward toward the
e. In the above calculation of the compression space it was
ıed that the openings over the valves are closed by plugs the
faces of which come flush with the inner surface of the
:hamber wall. Quite frequently these plugs are chambered
the inside, in which case proper allowance must be made
e chambers in calculating the compression space.

, **of Cylinder Bore**—The top end of the piston must
ly beyond the top end of the cylinder bore at the end
ard stroke, for the reason already explained, and the

bottom end of the piston should also pass slightly out of the cylinder bore at the end of the downward stroke, partly to prevent the wearing of a shoulder at the bottom end and partly because, if splash lubrication is employed, lubrication of the cylinder wall will be facilitated. The over-travel at the bottom end may be made somewhat greater than the over-travel at the top end. Since we decided on ⅛ inch for the latter, we may choose ⅜ inch for the former, making the total over-travel ½ inch.

The length of the finished portion of the cylinder bore is evidently equal to the length of the stroke plus the length of the piston minus the total over-travel. In our example, if we assume that the piston is 4½ inches long, the total length of the bore will be

$$5 + 4\tfrac{1}{2} - \tfrac{1}{2} = 9 \text{ inches.}$$

At the lower end the cylinder is always counterbored to a taper, as shown in Fig. 37. The object of this is to facilitate the introduction of the piston rings and of the piston itself. The greatest diameter of the counterbore should be slightly larger than the outside diameter of the piston ring in its free state. When cylinders are cast singly they are often turned with a cylindrical projection or guide at their lower end below the base flange, as indicated by dotted lines in Fig. 37. This base flange permits of accurately centring them in the crank case, which is bored to a corresponding diameter. If no such guide is provided the cylinder should be held in alignment by means of dowel pins.

The dimensions of the various parts, as calculated by means of the preceding formulæ, are shown in Fig. 37. The water jacket head is shown domed, which makes the cylinder neater in appearance, and also adds to the strength of the head. Two bosses are shown cast on the jacket wall near its lower end. The openings are used in the first place for core prints for supporting the water jacket core. One of the openings can be used later for the cooling water inlet, and the other can be plugged. Instead of having the cooling water inlet at the bottom of the jacket it may be located underneath the exhaust valve chamber, and many designs consider this the preferable location, as it insures the most intense cooling effect near the exhaust valve, where excessive heating is likely to do damage first. However, in case the water enters the jacket near the exhaust valve, a drain cock must be placed at the bottom of the jacket space, so that all water may be drained out of the jacket when desired.

In the design Fig. 5 the valves are entirely surrounded by the water jacket, which is now considered an essential point. Thus the valve chamber and approaches closest to the cylinder

wall the cylinder water jacket space is necessarily somewhat reduced. The width of the water space at this point should not be less than ¼ inch, as otherwise there may be difficulty in the foundry. In laying out the water spaces the designer must see to it that there is no point from which the water cannot reach the outlet without passing to a lower level, as otherwise steam pockets will be formed, and the particular portion of the cylinder wall thus deprived of water may overheat.

Twin Cylinders—In the design of twin cylinders, about the first question that comes up is whether it is necessary to have a water space between the cylinders at the point where they are nearest to each other or whether a common wall may be used at this point. Both arrangements are practicable, and both are in extensive use, although in this country by far the greater number of twin cylinders have a water space between the cylinders. In Europe, on the other hand, many engines are made with a common cylinder wall. If the latter style of construction is adopted it is necessary to provide an extra thickness of metal where the wall is common to both cylinders. By referring to Fig. 39 it will be readily seen that the thinner this wall is made the greater will be the distance from the centre of it to the water jacket; and, besides, the cross section of the metal through which the heat must travel will be less, while the area through which heat is absorbed will be greater. A good rule is to make the minimum thickness of the common wall 50 per cent. greater than the thickness of the regular cylinder wall. Some manufacturers make it twice as thick as the regular cylinder wall.

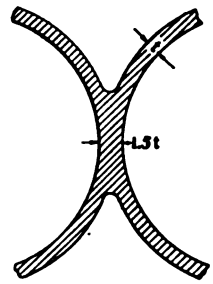

FIG. 39.

A typical twin cylinder design is shown in part sectional plan and evelation in Fig. 40. These cylinders are also of the T-head type. That part of the cylinder wall which is exposed to the action of the hot gases is completely surrounded with water for the greater part of its length, but the two compression chambers have a common wall. One respect in which this design differs from that of Fig. 37 is that the valve passages underneath the valve seats, instead of turning through a right angle, turn through an angle of only 45°. At the outlet of the valve passages there are oval bosses *A* for pipe connections by means of flanged fit-

tings. The 45° angle gives a freer passage for the gases, and is, therefore, advantageous. The jacket walls in this design are provided with large hand holes *B* at opposite ends. This permits of a more substantial support for the jacket core in casting, and also greatly facilitates the removal of the core sand. It is quite important that all of the core sand be removed from the casting, as otherwise it is likely to become loosened later, when the motor is in service, and choke the water passages. The two hand holes are closed by suitable cover plates. An increased thickness of metal is provided all around the hand hole and the flange thus formed is milled off to insure a water-tight joint with the cover plate, which is held in place by means of six screws.

In this design the two valves on each side are siamesed, that is, the spaces underneath the valve seats communicate with each other, and there is only a single outlet for the two valve chambers and only a single connection. There is some objection to siamesing the exhaust valves in this way, in the case of two and four cylinder motors, because in these motors one cylinder begins to exhaust before the exhaust valve of the preceding cylinder closes, and if the two exhaust valves are siamesed it is inevitable that some of the exhaust gas from one cylinder will blow over into the other, thus preventing its complete evacuation. It is, however, common practice to siamese the exhaust valves also. In six cylinder motors with twin cast cylinders the firing order can be so arranged that the two cylinders of any one pair will never fire in direct succession. The exhaust opening periods of the two cylinders which are cast together will then be separated by 240°, which is more than the period of opening of one exhaust valve.

In this design the water enters the jacket space through the opening *C* at the side of the exhaust valve chamber just above the exhaust outlet, and it leaves the jacket on top midway between the two cylinders where a boss *D* for a pipe connection is provided. At the sides of the cylinders a short distance underneath the bottom of the water jacket are provided little projections *E* which serve as supports for a tool used for compressing the valve springs when it is desired to remove the valves. These valve tool supports are quite a convenience and should be more generally provided. Between the two valve chambers on each side is shown a boss *F*, which is drilled for the reception of a stud. This stud serves to clamp in place a yoke by means of which the plugs or caps over the two valves are held down on their seats.

A twin cylinder is always secured to the crank case by means of six studs or bolts which are located as shown in Fig. 40. The

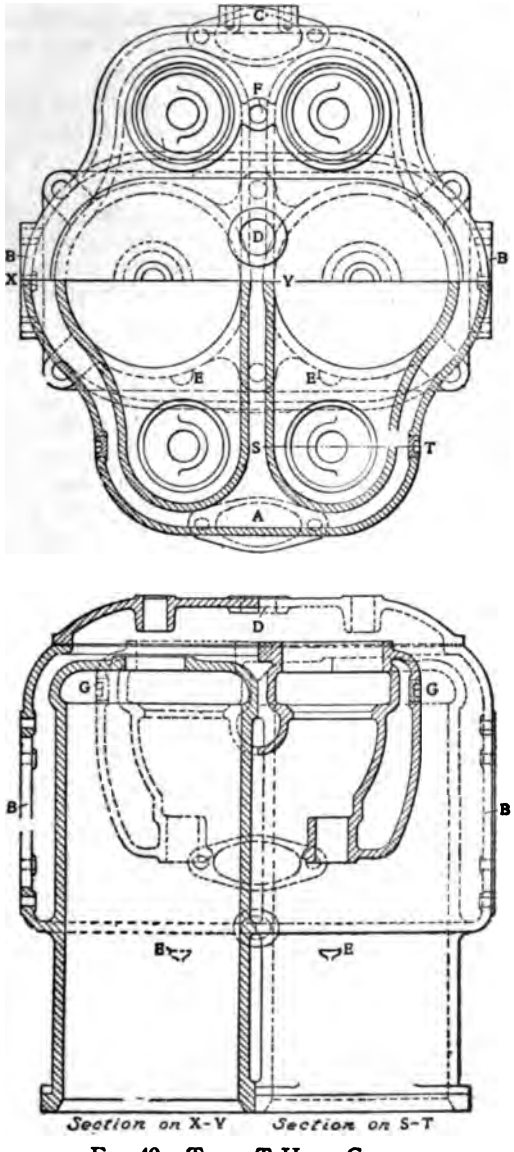

FIG. 40.—TWIN T-HEAD CYLINDER.

diameter of these studs can be calculated by means of the formula given for single cylinders. The two small plugs *G* serve to close holes left by core prints for the jacket core.

L-Head Twin Cylinder—An L-head twin cylinder design is shown in Fig. 41. The two inner valves in an L-head motor are practically always the inlet valves, because, as already stated, siamesing is more advantageous in the case of the inlet valves than in the case of exhaust valves, and in an L-head motor only the inner pair of valves can be siamesed. Besides this, placing the two inlet valves together lessens the need for a water jacket between the two valve chambers, and in an L-head motor the space thus gained can be used to advantage for increasing the valve diameters.

The valves are placed as close together as possible. If the clear diameter is *d* the distance apart of the valve centres will be about 1.44 *d*, if the valve openings are closed by separate plugs or caps and the water jacket is brought quite close to the valve seats where they approach closest to each other. In the design here shown the clear diameter of the valves is 0.4 *b*, and it will be noticed that the valve box is of the same length as the cylinder block. If larger valves are desired the valve box will be longer than the cylinders, and designs of this kind are not uncommon. An expedient resorted to in order to bring the water as close to the valve seat as possible at the point where the two valve pockets have a common wall, without sacrificing valuable space in a longitudinal direction, consists in making the inlet pocket rather shallow, turning the inlet passage sideways directly underneath the valve seat.

The outlets of the valve passages are all on the same level, and bosses *A* are provided in the casting, to be drilled and tapped for the reception of studs by means of which the inlet and exhaust manifolds are clamped in place. One feature of this design is that the water space around the cylinders is made larger at the top end of the cylinders than at the bottom. This insures a greater amount of water where the most heat is absorbed, which is considered advantageous by some designers. It also gives a rather neat form of cylinder. Both the cylinder head and the jacket head are cast integral in this design, and there is a central hole in the head over each cylinder into which can be screwed the compression relief cock. There is a large hand hole in the side of the jacket, which is shown closed by a sheet metal plate held in place by fillister head screws, water tightness being insured by a rubber gasket. This provides for the support of the jacket core, and two additional core prints

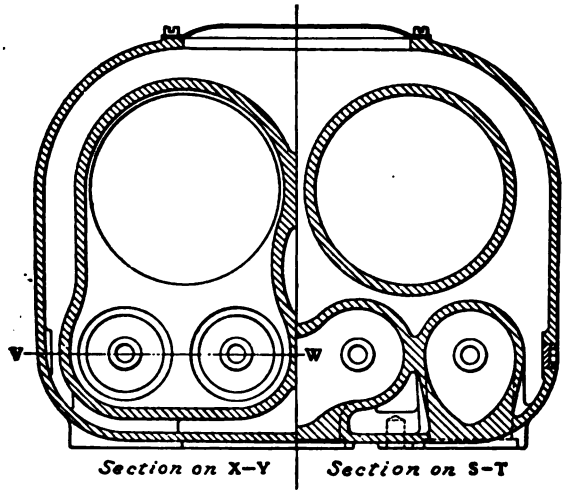

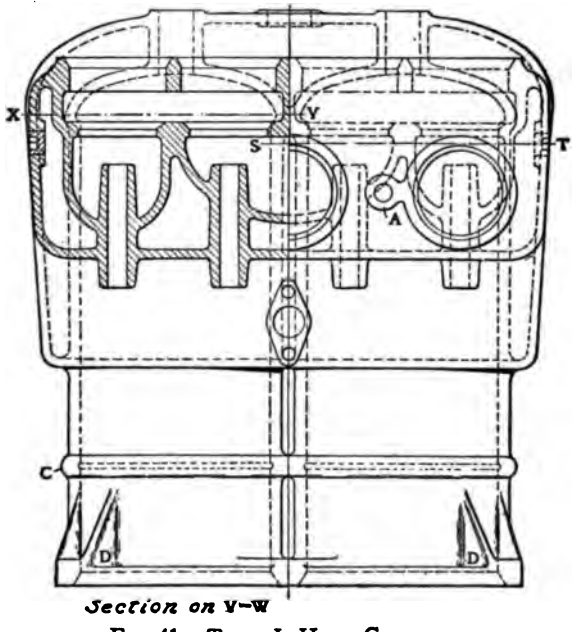

FIG. 41.—TWIN L-HEAD CYLINDER.

are provided for at the ends of the valve box, as indicated by plugs at these points.

Another feature in cylinder construction illustrated in this cut is an oil groove *C* cut in the cylinder wall about even with the centre of the piston pin when the piston is in its lowest position. Ordinarily oil grooves are cut into the wall of the piston, but some designers contend that the proper place for them is the cylinder wall. This oil groove is uncovered by the piston when the latter approaches the upper end of its stroke, and the groove will then be filled with oil from the splash, which will be distributed over the piston as the latter makes its downward stroke. The oil groove has a tendency to concentrate the strains, and in order to prevent any weakening of the cylinder it is advisable to reinforce the wall at that point, making it of 25 per cent. more than the normal thickness. The lugs for the cylinder bolts are shown strengthened by the ribs *D*, a practice followed by some French designers. This design is hardly adapted for American conditions, however, owing to the fact that considerable hand chipping may be necessary to get a good square seat for the washers. Heavy washers or spacers must be placed under the nuts to bring the latter sufficiently high to be conveniently reached with a wrench. In large bore cylinders with thin walls, four vertical ribs are sometimes provided on the cylinder wall from the lower end of the jacket to the base flange.

Separate Cylinder Heads.—Cylinders with valves in the head necessitate the use of valve cages, except when, as in the case of the Knox motor, the cylinder head is removable. In the early automobile motors the cylinder heads were invariably cast separate from the cylinders and bolted to them, with a gasket of asbestos cloth between. Segmental openings were cut into the gaskets, through which the cylinder water space communicated with the head water space. But as the wall thicknesses were made smaller and smaller, it became more difficult to keep these gaskets in place by the pressure between the cylinder and head. The clamping surfaces were faced off in the lathe with a coarse feed and the gasket material was rendered more tenacious by interweaving it with copper wire; nevertheless the gaskets would frequently blow out under the pressure of explosion or burn out when the water circulation failed, and renewing them was one of the most dreaded repair jobs in those days. This led to the practical abandonment of separately cast heads. They were reintroduced some years ago by the Knox Automobile Company because they permit of forming valve seats directly in the

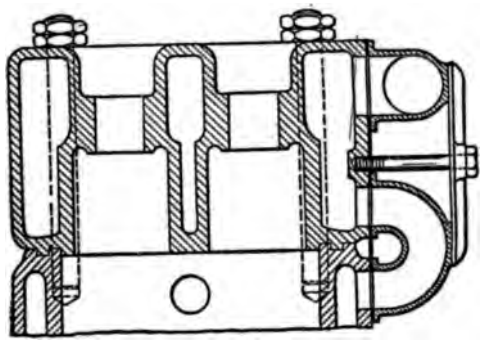

FIG. 42.—KNOX CYLINDER HEAD.
(Water connections swung around 90 degrees into the plane of the valves.

head, doing away with cages, thus permitting of using larger valves, insuring more effective cooling of the valve seats and rendering the valve construction simpler. Gasket difficulty is obviated by placing the cylinder and head jacket spaces in communication through an outside, U-shaped pipe fitting.

Recently quite a number of four cylinder block motors have been made with separate heads, an asbestos filled sheet copper gasket being used between head and cylinder block, which latter is often cast integral with the top half of the crank case. These motors do not always have the valves in the head, the chief object in making the head separate being to facilitate the operation of decarbonizing the cylinders.

Valve-in-Head Cylinders—The ordinary type of valve-in-head motor with integral cylinder heads embodies cages in its construction. These consist of cylindrical shells which fit into corresponding bored chambers in the cylinder head, being

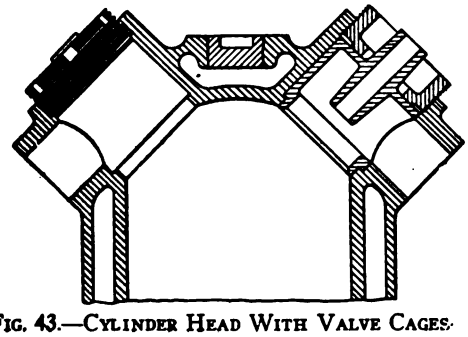

FIG. 43.—CYLINDER HEAD WITH VALVE CAGES.

forced against a square or inclined shoulder near the bottom of the valve cage pocket by means of an annular nut screwed into the outer, threaded end of the pocket, or by means of studs passing through a flange on that portion of the valve cage outside the bore, and into the cylinder head wall. The cylinder shown in Fig. 43 is typical of this construction. Within the valve cage there is a spider which supports the valve guide and in the wall of the cage there is a circular or square opening by means of which the interior of the valve cage communicates with the valve passage cast in the cylinder head. The cage at its inner end is usually ground to a conical seat and a gasket is placed between the cage and the nut. In multicylinder, valve-in-the-head motors, in which the valves are arranged vertically, they are usually placed all in one row; that is, the two valves in each cylinder head are placed side by side in a fore-and-aft direction. But where the valves are inclined they are placed crosswise of the cylinder.

Sheet Metal Water Jackets—Water jackets of sheet metal have two advantages. They are lighter than integrally cast jackets, because they can be made thinner; and, besides, they cannot easily be injured by freezing of the jacket water. These sheet metal jackets are generally spun or pressed of copper. The two most prominent users of such jackets have been the Cadillac Automobile Company and the Chadwick Engineering Works. The former cast its cylinders singly, while the latter cast them in pairs. Panhard & Levassor, of France, have also used copper jackets for some of their motors. The Cadillac cylinder is here illustrated as an example of this form of construction. The cylinder is cast with a radial flange *A* at the bottom of the jacket space. This flange is slightly tapered and is turned off very coarsely, and the copper jacket is pressed over this. A steel ring about two one-thousandths inch small is then forced over the flange and insures a tight joint and one which enables the jacket to be quickly removed. The valve pocket is formed integral with the cylinder head, and the head is held to the cylinder by means of a right and left screw nipple. The under side of the head is provided with two V-shaped circular ridges which are forced down at *B* and *B* on each side of the water jacket ports, thus making a tight joint.

If a sheet metal jacket is to be used, account must be taken of the difference in the expansion of the cylinder and the jacket when the motor is started. When the jacket is in the form of a cylinder with flat or domed head, held at its open

end and at the centre of the head, it is free to expand and contract longitudinally, but when it is in the form of a cylindrical shell, held at both ends, it must be provided with circular corrugations, or trouble will be experienced from leaky joints.

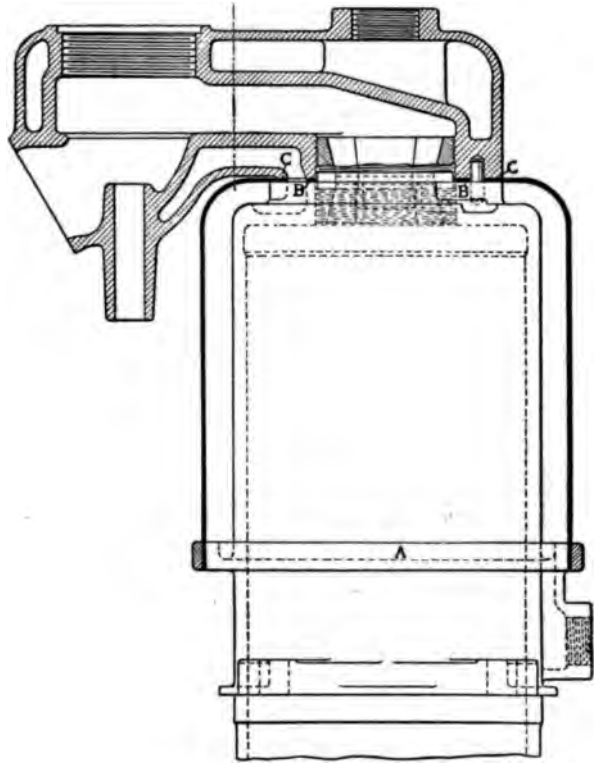

FIG. 44.—CADILLAC CYLINDER, WITH SHEET COPPER JACKET.

Block Cylinders—About 1906 the practice of casting four cylinders in a single block originated in France, and though at first it was predicted that the number of "wasters" (imperfect castings) would be so large that this practice would be abandoned again, it has constantly gained ground.

The simplest form of block cyclinder is that in which the cylin-

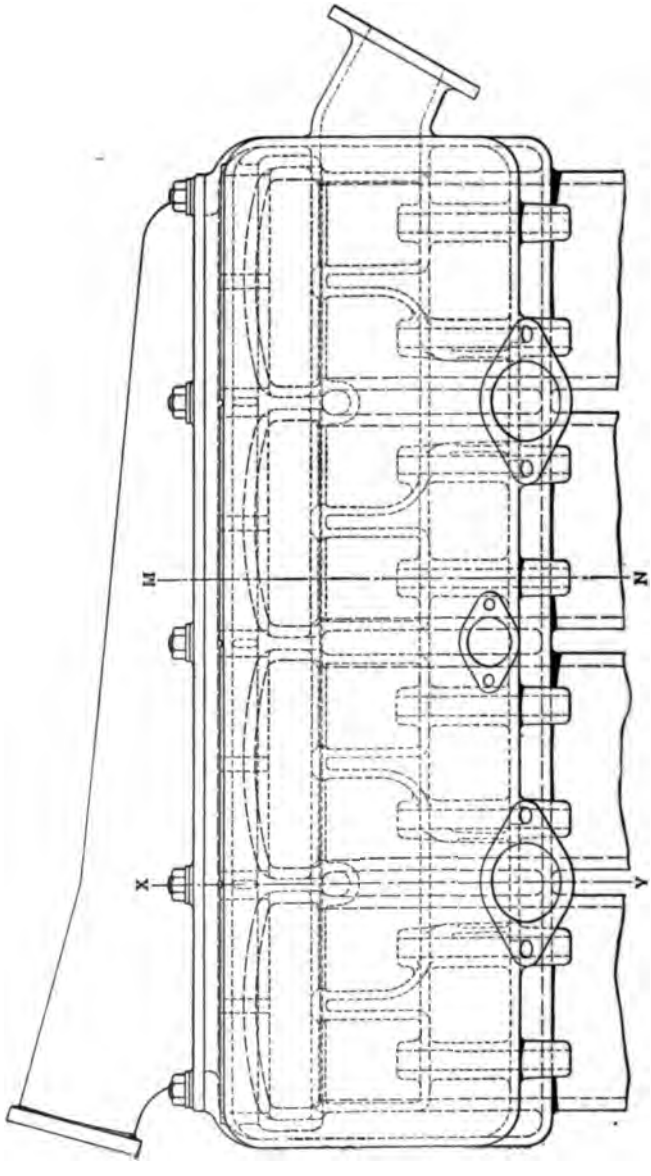

FIG. 45.—BLOCK CYLINDER DESIGN, WITH INTEGRAL EXHAUST MANIFOLD

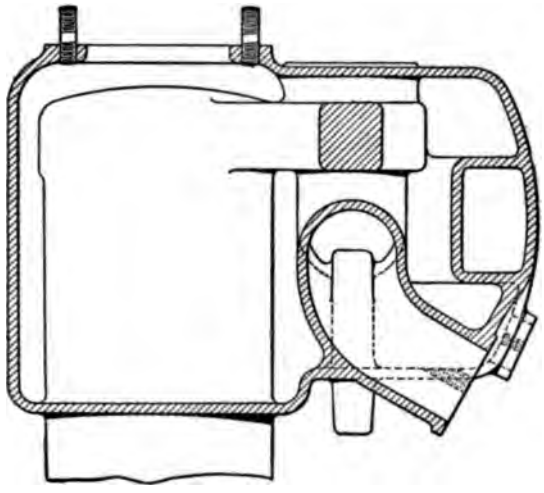

FIG. 45-A.—SECTION ON X-Y.

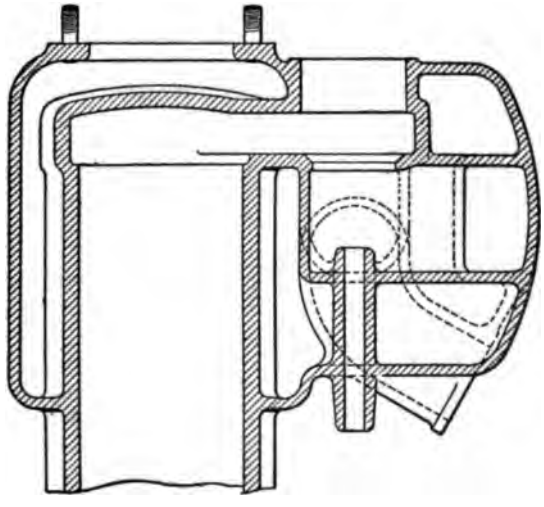

FIG. 45-B.—SECTION ON M-N.

der head is cast separate and no manifolds are incorporated in the cylinder casting. Slightly more complicated is the cylinder block with integral head, but the most intricate piece of foundry work is a four or six cylinder motor with integral manifolds. The latter type of cylinder casting results, however, in the neatest and most compact motor, and is strongly favored for small motors.

Fig. 45 shows a block cylinder design in which the exhaust manifold is cast integral. The valves are all on one side and the inlet ports are siamesed as usual. The pockets directly underneath the exhaust valves connect by straight horizontal passages with the longitudinal exhaust passage. As clearly shown in the section *X-Y*, this exhaust manifold is surrounded by cooling water on three sides. Where the exhaust manifold is cast integral, a relatively larger amount of heat goes into the cooling water, and in view of this fact exceptionally large water spaces are provided around the valve passages in this design. The valve pockets are entirely surrounded with water. The water enters the jacket space underneath the longitudinal exhaust passage at the middle of the length of the motor, and leaves through the jacket top plate, which is developed in the form of a water outlet connection.

Another form of block cylinder is shown in Fig. 46. In this case both the exhaust and inlet manifolds are cast integral with the cylinder. The longitudinal exhaust passage is less completely water-jacketed than in Fig. 45, and is located outside the valve box proper. Cooling flanges extend along both its top and outer side wall. The longitudinal passage forming the inlet manifold runs along the lower outward edge of the valve box. With a design of this kind a stronger water circulation would be required than with that of Fig. 45. This illustration also shows a cover over the valve springs, which it is usual to provide in motors of this type.

Abroad it is the prevailing practice to locate the carburetor on the right hand side of the motor in automobiles. In the case of T-head motors the inlet valves are practically always on that side, and in the case of L-head motors, with all valves on the left hand side, the inlet pipe often runs across the top of the cylinders or through between the two pairs below the water jacket. With block motors it is naturally desired to avoid such long intake pipes, which look ungainly and are more or less impracticable on account of the condensation of gasoline taking place in them in cold weather. It therefore occurred to a number of designers to cast an inlet passage integral with the cylinder block extending from the left to the right hand side. In one

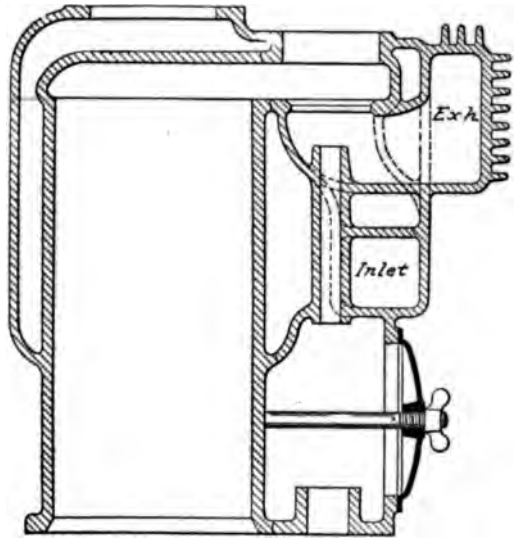

FIG. 46.—SECTION OF BLOCK CYLINDER WITH INTEGRAL INLET AND EXHAUST MANIFOLDS.

or two motors this passage is carried around the end cylinder, but the more usual plan is to make the distance between the two middle cylinders a little larger than ordinarily and core an inlet passage between them. This is done in the cylinder block illustrated in Fig. 47. Since the widespread adoption of left hand drive, many L-head motors are cast with the valve pockets on the right hand side. Some designers then place the carburetor on the right hand side, while others carry the inlet passage or pipe to the left side of the motor.

Integral manifolds have not proved quite as popular as block casting of the cylinders, and most block cast engines are now made with separate manifolds. This not only greatly simplifies the task of making the castings, but it materially reduces the amount of heat absorbed by the cooling water, hence it permits of a smaller radiator being used.

Cylinders Integral With Crank Case.—In recent years quite a number of firms have adopted the practice of casting the cylinders and the top half of the crank case in a single piece, the cylinder head being cast separately. This practice was first introduced by the Ford Motor Co., and has proven

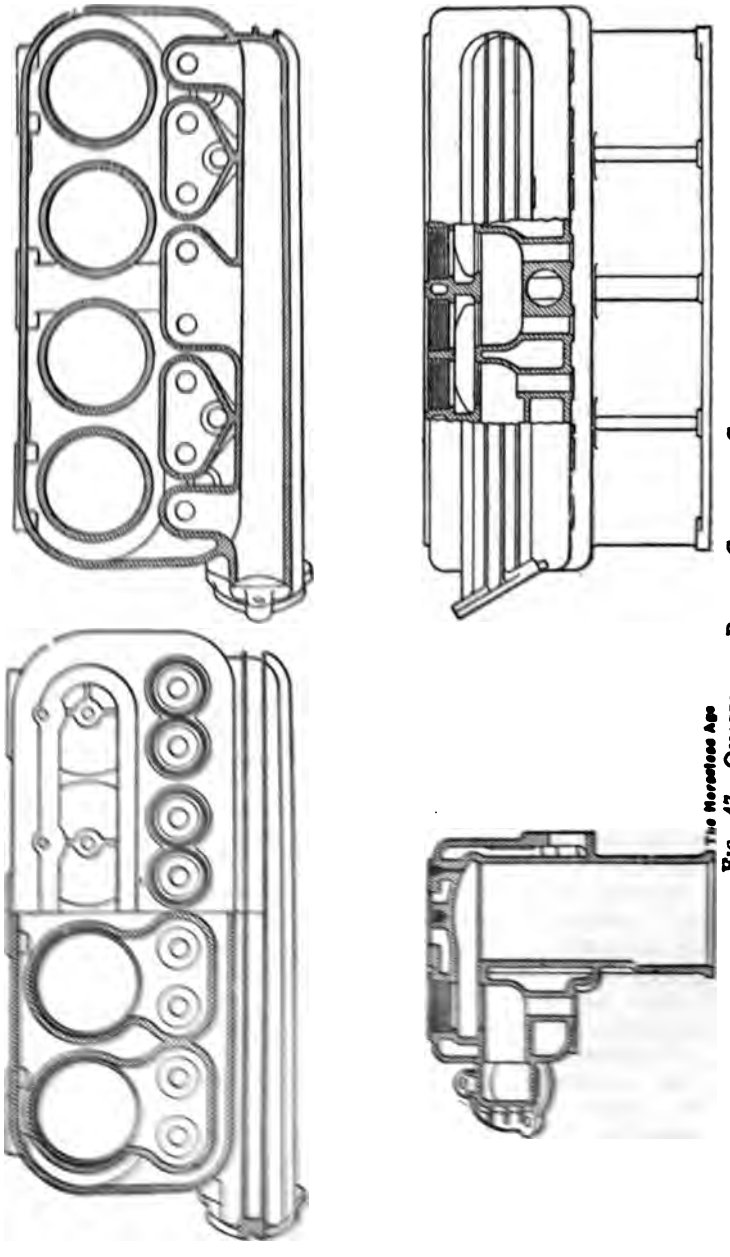

FIG. 47.—QUADRUPLE BLOCK CYLINDER CASTING.

The Horseless Age

quite successful. It might possibly be considered a disadvantage that it involves the use of cast iron in the crank case, and, consequently, an increase in weight. On the other hand, there is the advantage that the cylinder block integral with the crank case greatly stiffens the latter, and not so much ribbing is required as in an aluminum crank case. From the standpoint of cost of manufacture everything is in favor of the iron crank case.

In eight-cylinder engines practice still varies considerably. All of the four cylinders of each set are always cast together,

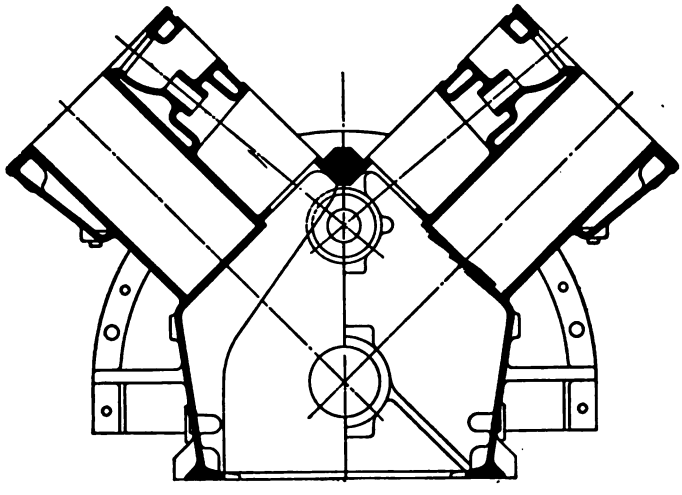

FIG. 48.—EACH SET OF FOUR CYLINDERS CAST INTEGRAL WITH HALF OF CRANKCASE (NORTHWAY).

but aside from this, three different methods have gained currency. Either the cylinder blocks may be cast with integral cylinder heads and bolted to an aluminum crank case; both cylinder sets without their heads may be cast in one block together with the top part of the crank case, or with the whole of the crank case except the base, or the crank case may be split vertically and each half cast together with one set of cylinders without head. A design in which each of the two cylinder sets together with one half of the crank case are cast in a single piece, is shown in Fig. 48.

Pattern Making and Molding—In the design of the cylinder it is well to consult with the pattern maker, because a cylinder is at best a difficult piece to mold, and the advice of an experienced mechanic may obviate trouble later. Cylinder pattern making has become an art by itself, and it is a good plan to trust a job of this kind only to a man experienced in this particular line.

Cylinders must always be molded with the head downward. for the reason that blow holes, porous spots, etc., are most likely to occur near the top of the casting, and the head of the cylinder. which is the working end, must of necessity be of sound metal In order that the metal may flow freely to every part of the mold the latter must be thoroughly vented, and a high riser (opening on top which fills with metal after the mold is filled) is provided, so that the molten metal in the mold may be subjected to the pressure due to a considerable head, and all gases forced out through the vents. It is imprisoned gases that cause blow holes and other imperfections.

It is not often that the compression space is of such a simple geometrical form as in the cylinder Fig. 37, and when it is quite irregular it is naturally more difficult to accurately calculate the compression volume provided by the design. It is then a good plan to let the pattern maker make a wooden model of the compression chamber. This can then be weighed and its weight compared with that of a simple geometrical form (cube or prism) made of the same kind of wood, which enables its volume to be obtained by the solution of a simple geometrical proportion.

Testing Castings—When the castings have cooled they are cleaned of core sand, the seams, etc., are chipped off, and the castings are then pickled or cleaned of scale in a sulphuric acid solution.

When the castings are received at the factory they are carefully inspected and tested for imperfections before any machine work is done upon them, so that no labor may be wasted on imperfect castings. The usual test is by water pressure, and a fixture and stand for making such a hydrostatic test rapidly has been described by Curtiss Smith. The fixture, Fig. 49, consists of a skeleton frame designed to receive the cylinder casting. The frame is provided with two trunnions by means of which it is supported on the standard, Fig. 50, and which permit of tipping it to any agle, for examining the bore and all parts of the casting. The castings are held in place in the frame by means of three thumb screws, two pressing laterally against the lower

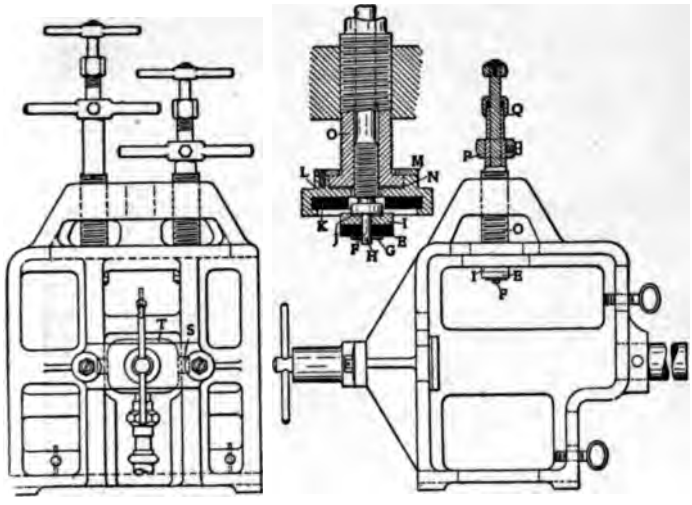

FIG. 49.—CYLINDER TESTING FIXTURE.

unjacketed portions of the cylinders and the third centrally against the valve chamber. All holes into the jacket must be plugged, except the one through which the hydrostatic pressure is applied. The design of the fixture would naturally vary with the form of the casting to be tested. The one here shown was designed for a twin cylinder casting with central openings in the cylinder head and jacket head. The hole in the cylinder

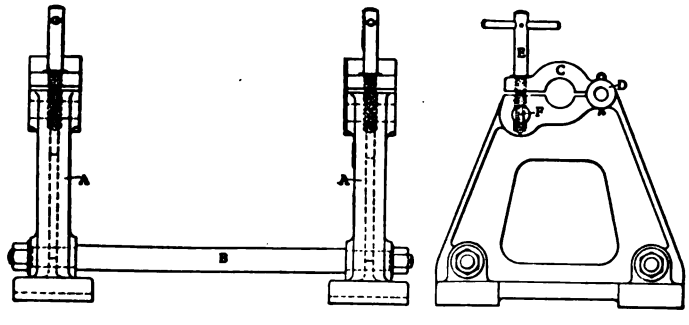

FIG. 50.—CYLINDER TESTING STANDARD.

FIG. 51.—FACING CYLINDER AND CYLINDER HEAD CASTINGS IN VERTICAL SPINDLE MILLING MACHINE.

is held in place by a copper washer *G* and cotter pin *H*. This washer is backed up by a steel thrust disc *I*, which has a copper washer *J* interposed between it and a shoulder on the spindle. The stem *F* is threaded at its lower end for applying pressure and is squared at its upper end for the operating handle.

The hole in the jacket head is stopped by a soft rubber plug *K* held in a thrust block *L* with retaining flange *M* and copper washer *N*. This plug is operated by the hollow spindle *O*, which screws through the cast frame and carries the spindle *F*. The spindle *O* extends beyond the handle *P* to form a stuffing box, being threaded at its upper end to receive the gland nut *Q*.

On the back of the cylinder casting for which this fixture was designed there is a large square hand hole. For plugging this hole and providing a water connection a special construction is used. The trunnion at this side of the fixture is made of steel, bolted to the casting and drilled and tapped to receive a clamp screw. Grooves *S* are planed between the trunnion lugs, in which the block *T* slides. This block is faced with a soft rubber packing, which is held in position by flathead screws. The block *T* is bored and tapped to receive a pipe through which the testing water enters the jacket space. Connection to the water supply is made by means of a union with a short section of pipe and rubber hose.

The standard in which the above fixture is mounted consists of two end castings *AA* held in place by spacers *B*. The trunnion bearings are provided with clamping caps *C* which are hinged at *D* and clamped with the T handle *E*. The standard is made high enough to allow all parts of the testing fixture except the plug stems to pass over the spacers *B*.

Facing and Drilling Cylinders—The first machining operation on a cylinder casting consists generally in milling off the base and head flanges and the bosses for the different pipe connections. The base flange is milled first because the cylinder is usually secured to the boring fixture by means of this flange, at least in the case of twin and block cylinders.

Next the numerous holes in the cylinder block are drilled, and this is usually done in a multiple drill press. Ordinarily all the holes on a single side, as, for instance, the bottom flange holes, are drilled in a single operation, but where engines are built on a large scale use is made of specially designed drill presses which drill holes in three or four directions at one operation.

Two illustrations of representative operations in a modern automobile motor shop are shown in Figs 51 and 52,

both being from the works of the Dodge Brothers Company, Detroit. The motor being worked upon is of the type in which all of the four cylinders and the top part of the crankcase are made in a single casting, the cylinder heads forming a separate casting. In Fig. 51 a large number of the cylinder castings and head castings are clamped to the carriage of a special quadruple spindle milling machine, the cylinders in two rows in the middle and heads on each side.

In Fig. 52 one of the cylinder castings, after having had its plane surfaces milled off, has the tap holes drilled in it by means of a four-way semi-automatic power feed drill. This machine bores fifty-five holes in a cylinder casting in one operation, and works from four sides of the casting simultaneously. The only attention given the machine is when the operator places the castings in position or removes them when completed. Fourteen holes are drilled in the top of the casting to take the studs that hold the cylinder head in place. Twenty holes are drilled in the base to take the cap screws that hold the oil pan, and eleven and ten holes are bored in the front and rear, respectively, to take the cap screws that hold the gear cover case and transmission housing to the cylinder casting. The machine has a capacity of over 250 cylinder castings per day. Working in conjunction with the machine is a twin machine with the same number of spindles. These spindles are fitted with taps that cut the threads in the fifty-five holes in one operation.

Another method of handling drilling, tapping and similar operations on a cylinder casting is shown in Fig. 53, the photo being from the plant of the Continental Motor Mfg. Company, Detroit. The cut shows a battery of multiple spindle drills, all arranged in line and with a pair of steel tracks in the floor in front of them. Each cylinder casting, being clamped to a fixture supported upon a wheel truck, is operated upon successively by each of the different drill presses. The advantage of this arrangement lies in the fact that quite a number of successive drilling and similar operations have to be performed on the valve seats and adjacent parts all on the same axis, so that they could not well be performed simultaneously. Thus the hole in or for the valve stem guide must be drilled, the valve seat must be bored out, the valve seat faced, and the valve plug hole must be drilled and tapped. In the Continental plant each cylinder casting, after being

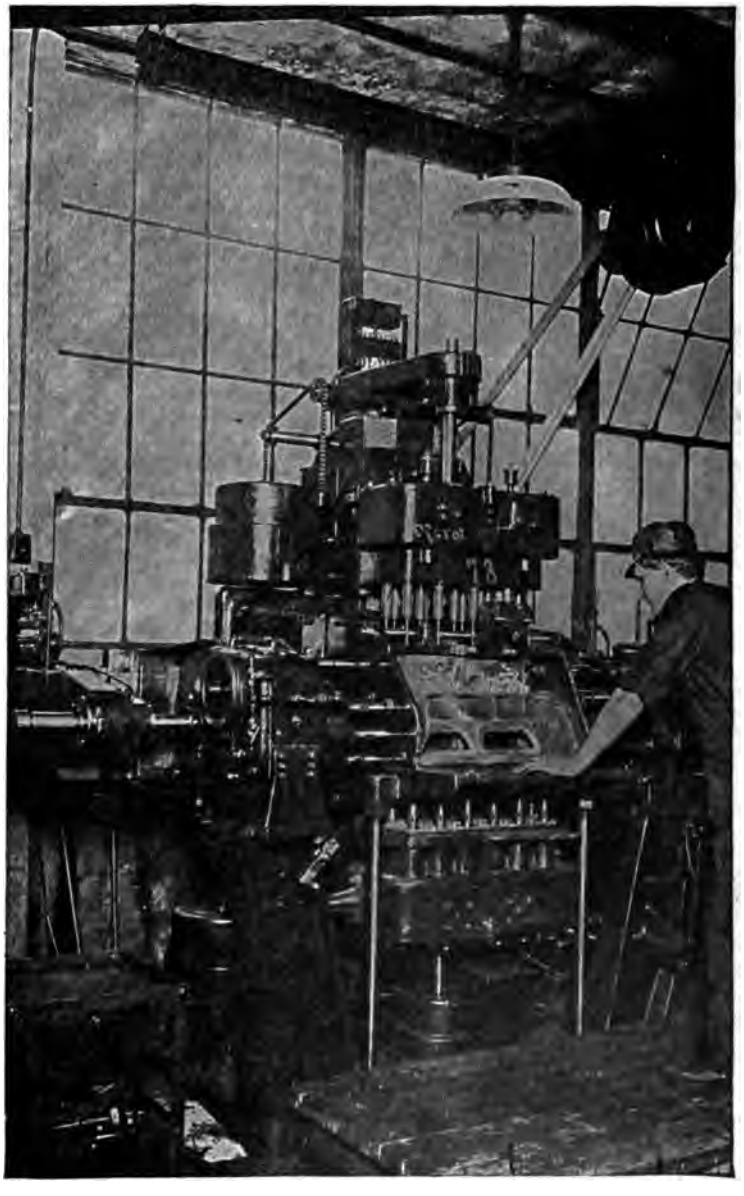

FIG. 52.—DRILLING CYLINDER BLOCK IN FOUR WAY DRILL PRESS.

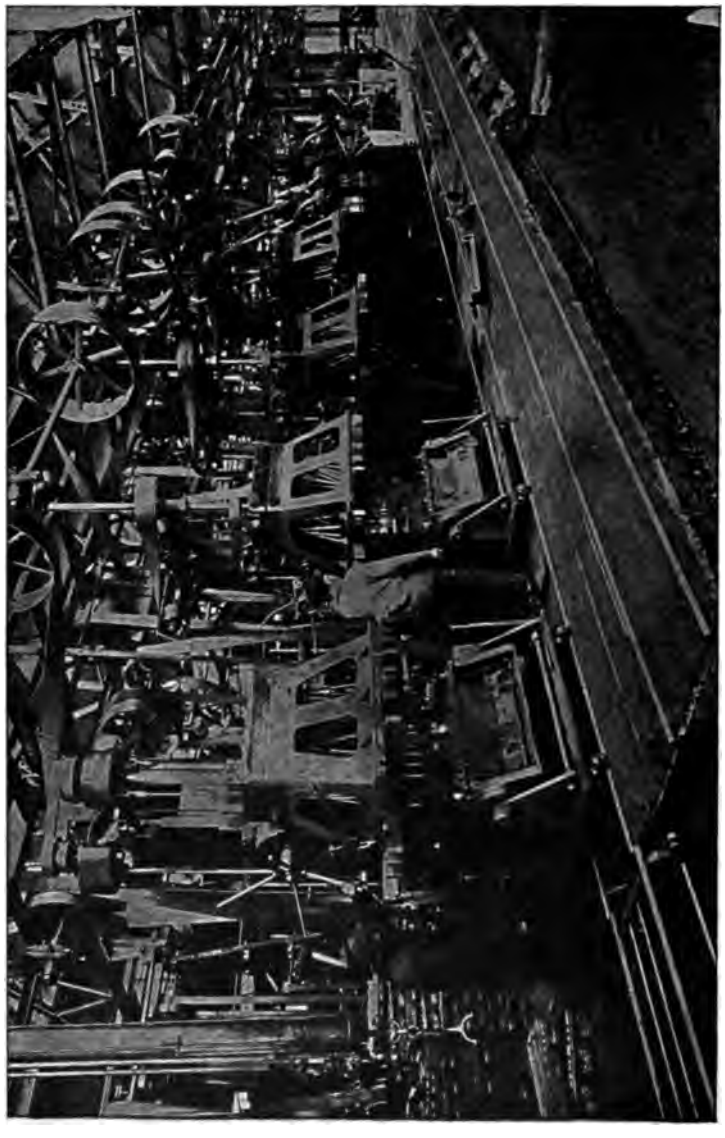

FIG. 53.—DRILLING, TAPPING AND COUNTERBORING CYLINDER CASTING IN RAILROAD GANG DRILLS.

milled, is clamped into the fixture shown and in eight operations it comes out at the end of the first track completely drilled and tapped. The fixture is then switched over to the second or return track by means of the truck shown in the foreground, and a new cylinder casting is inserted on the return trip. The number of castings machined per hour is governed only by the number of fixtures provided.

Boring and Grinding Cylinders.—The next operation is the rough boring. This is done in either a horizontal or vertical boring mill. Generally two cuts are taken to remove the stock allowed for finishing, but the cylinder bore is left about 0.010 inch small in diameter, this amount of stock being removed by grinding.

The method of holding the cylinders to the carriage of the boring mill differs considerably in different shops, and also with the type of cylinder casting to be bored. Single cylinders are often held in a cylindrical fixture, the upper half of which is hinged to the lower, so that the castings can be easily put into the mill and removed. In the case of twin and quadruple cylinders the general practice is to bolt the casting by means of its base flange to an angle bracket which is bolted to the lathe carriage. A number of special machine tools have been designed for boring automobile cylinders. Some of these have revolving bed plates of double ended form, so that a casting can be clamped to one end while another is being bored, and the machine thus be kept in operation almost continuously.

Fig. 54 shows a twelve spindle cylinder boring machine manufactured by the Beaman & Smith Co., Providence, R. I. It consists virtually of two machines in one, each machine having six spindles. The cylinder blocks are placed in a suitable fixture as shown, which is attached to the revolving table. This admits of a roughing cut being taken with one set of spindles and at the same time a second cut in the other six cylinders. While these operations are being performed, two other cylinder blocks that have been finished are being replaced by new ones. Such machines are sometimes made with the columns at right angles to each other, instead of facing each other.

In boring a cylinder which is open at both ends the boring bar may be supported between centres in a lathe or boring machine, and provided with a series of cutters which are equally spaced about the circumference and along a portion of its length. The boring bar is only little smaller in diameter than the rough

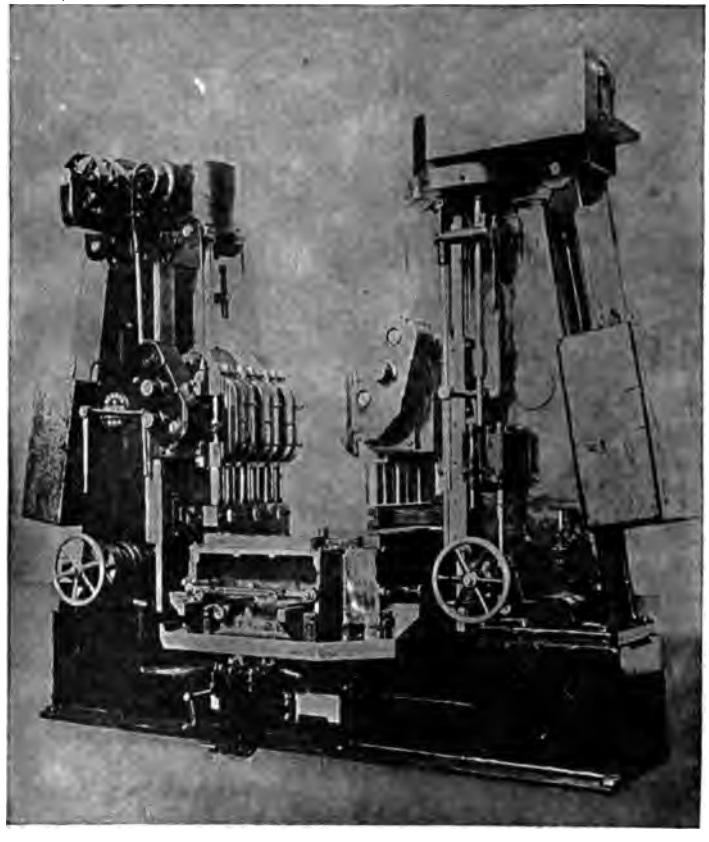

FIG. 54.—TWELVE SPINDLE VERTICAL CYLINDER BORING MACHINE.

cylinder bore, and is provided with a mechanism for moving the cutters outward. Cylinders with integral heads are bored with a spindle supported at one end only. It is quite a problem to give a sufficiently rigid support to this spindle. Fig. 55 shows a cylinder boring machine spindle patented by the Beaman & Smith Company, of Providence, R. I. This spindle is designed for use on a vertical boring machine. *A* is the hollow spindle which is driven through the gear wheel *D*, secured to its upper end, and has the boring and chamfering tools *W*, *X*, *Y* screwed to its lower end and secured by a set screw. The spindle *A* turns on the

stationary stud *C*, being provided with bronze bushings *B B*. The end thrust due to the feed is taken up on ball thrust bearings *E, G*. The chamfering tools are held in a split ring *X*, which is clamped to the spindle *A*. The spindle, gear, housing, etc., are carried on a long vertical saddle with adjustable stops. The firm support of the spindle is apparent from the drawing.

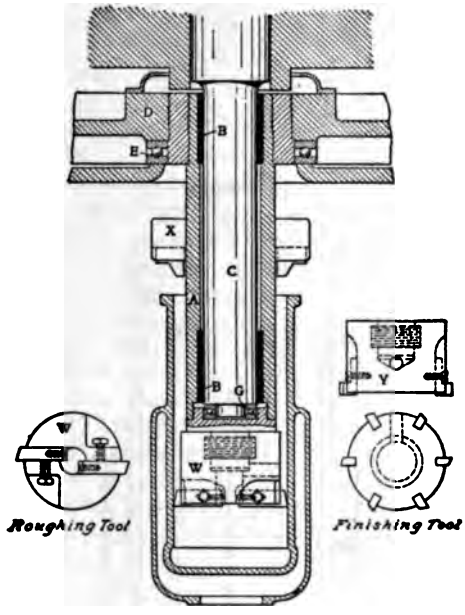

FIG. 55.—BEAMAN & SMITH BORING MACHINE SPINDLE.

An arrangement for counterboring the compression chamber is illustrated in Fig. 56. This consists essentially of a spindle *A* with six inserted cutters *B*, with which the finishing cut is taken. The spindle is plit longitudinally into six equal sectors over more than half its length. When the top edge of the cutters *B* reaches the bottom end of the regular bored portion of the cylinder the spindle is expanded by the conical frustum *C*, which is secured to the fixture by means of which the cylinder casting is held to the bed plate of the boring machine, and in this way the head end of the cylinder can be turned several hundredths of an inch larger in diameter than the regular bore. At the same time as

the combustion chamber the piston ring chamfer is turned by means of the tools *D*.

In the early years of the industry it was customary to finish cylinder bores in the lathe, four or five successive cuts being

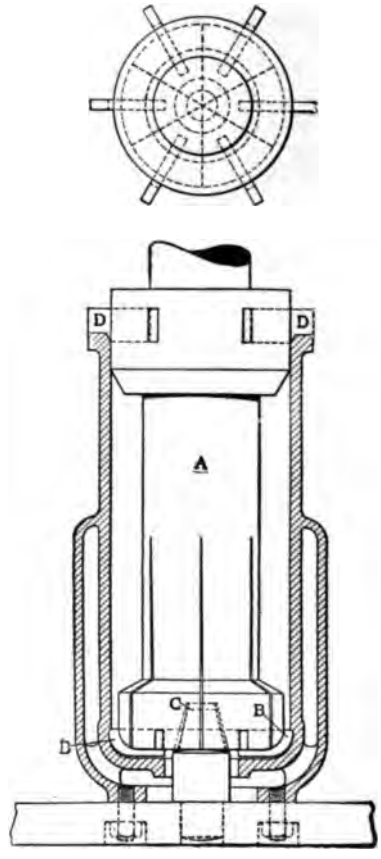

FIG. 56.—EXPANDING TOOL FOR FINISHING COMPRESSION CHAMBER.

taken, the last with a very broad nosed tool, which gave a comparatively smooth finish. The trouble with this method is that the cast iron of the cylinder is not of uniform hardness. There are hard spots and soft spots in the iron, and since the wall of

the cylinder is very thin, when the tool encounters a hard spot either the cylinder wall or the tool will spring slightly, and a high spot result. Now, in an engine cylinder, what is required is an absolutely cylindrical bore, which is the only kind that will insure a gas-tight fit of the piston rings. To improve upon the original method the lapping process was introduced, which consists in working a dummy piston back and forth in the bore of the cylinder with some abrading material, like ground glass, mixed with oil and smeared over the cylinder wall. The objection to this method is that there is danger of some of the abrasive being forced into the metal of the cylinder wall, and starting cutting of the wall when the cylinder is in service. The smaller sizes of cylinders are frequently reamed after the final cut has been taken in the lathe. The latest process for finishing cylinder bores consists in internal grinding.

After the roughing cuts have been taken the cylinders are frequently annealed. This relieves the internal strains due to shrinkage, etc., and renders the metal of more nearly uniform hardness. If the castings are not annealed they are generally allowed to age or season for a period varying from a few days to several weeks. The object of this "seasoning" is practically the same as that of annealing.

Cylinder grinding machines have been developed by a number of firms, including the Heald Machine Co., of Worcester, Mass., and the Brown & Sharpe Mfg. Co., of Providence, R. I. In these grinders the twin or multiple cylinders are clamped to a carriage similar to a lathe carriage which has a longitudinal feed and a cross adjustment. The grinding wheel and spindle are carried in a rotating head which is provided with a combination of eccentrics, by means of which the wheel can be fed against the work or set for bores of different diameter. These grinders are provided with several speed changes, a higher speed being usually employed for the finishing cuts. In the case of a twin or multiple cylinder, one bore is finished first and the casting is then moved sideways by means of the movable carriage to bring the second bore in line with the head of the grinder, which can be accurately done by means of a micrometer adjustment.

In ordinary grinding work the metal ground off and the particles of abrasive lost by the grinding wheel are removed by a stream of water which is constantly played upon the parts being ground. In cylinder grinding an air suction is substituted for this stream of water, which carries the metal dust and abrasive away as fast as they are formed. In some shops water at a temperature

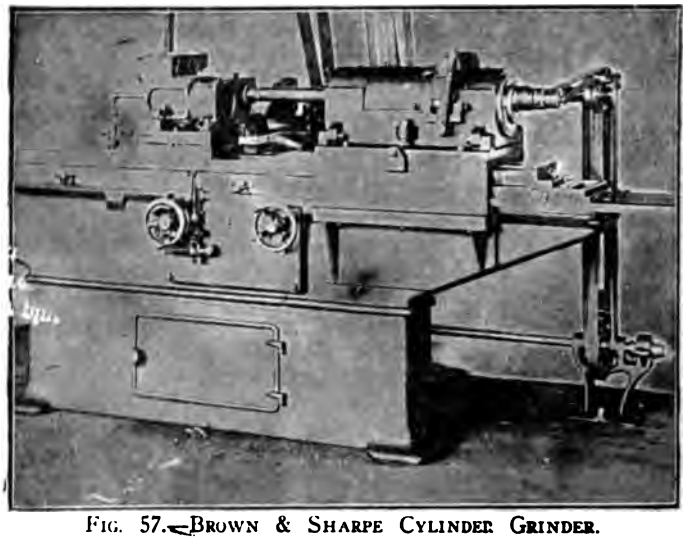

FIG. 57.—BROWN & SHARPE CYLINDER GRINDER.

of about 180° F. is kept circulating through the jackets while the grinding is being done, the object being to have the cylinder walls at as nearly working conditions as possible. It is claimed that if the cylinders are ground cold and an absolutely perfect cylinder is obtained, the bore will not be perfectly true when the cylinder is heated up. One disadvantage of grinding hot is that the bore will not be true when cold, and a perfectly ground cylinder may be rejected by the inspector. It is best, therefore, when grinding hot to inspect the cylinders while they are still hot. Cylinder bores are generally tested for accuracy by means of limit gauges. These consist of two steel plugs or cylinders differing in diameter by one or two one-thousandths of an inch. The smaller one of the two should just enter the cylinders, and the larger one should not.

Valve Plugs—The openings over the valves are usually closed by screw plugs which are chambered out to reduce their weight. These openings are bored to a diameter $\frac{1}{16}$ or $\frac{1}{8}$ inch larger than the outside diameter of the valve head, and are then threaded with a tap which usually has 12 threads to the inch. An asbestos filled copper gasket is placed underneath the flange of the plug to insure gas tightness. Quite frequently the spark plugs are screwed into these valve plugs, and the plugs must then be drilled and tapped for the purpose. The most commonly

used thread for spark plugs is the S. A. E. standard, which is ⅞ inch in diameter and cut with 18 threads to the inch. The part of the plug below the flange is ½ inch long. The priming cocks also are sometimes screwed into the valve plugs, but the preferred practice seems to be to place them in the cylinder head, so that the kerosene, etc., introduced through these cocks will be sure to get into the cylinder proper.

When there is sufficient room between the valve plugs, as there generally is in T-head cylinders, a stud and yoke are often employed for holding two adjacent valve plugs in place. The necessary size of stud may be found as follows: Assume a maximum explosion pressure of 400 pounds per square inch and let the diameter of the valve plug be d. Then the total pressure on the plug is $\frac{400 \pi d^2}{4}$. Owing to the leverages, the tension on the stud is twice this, and allowing a factor of safety of 5, and considering the tensile strength of the material to be 100,000 pounds per square inch, the size of the stud must be such that the cross section at the bottom of the thread is

$$\frac{2 \times 5 \times 400 \times \pi d^2}{4 \times 100{,}000} = \frac{d^2}{32}$$

For a plug $2\frac{3}{16}$ inches in diameter the area should be

$$\frac{2\frac{3}{16} \times 2\frac{3}{16}}{32} = 0.15 \textit{ square inch.}$$

The nearest size to this in sixteenths of an inch, cut with an

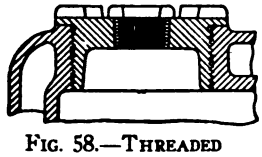

FIG. 58.—THREADED VALVE PLUG.

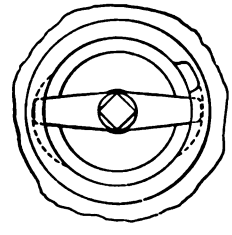

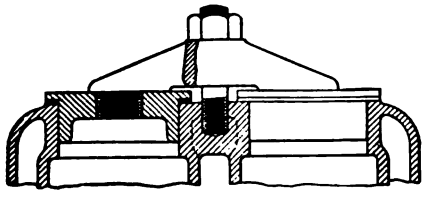

FIG. 59.—PLUGS HELD DOWN BY YOKE.

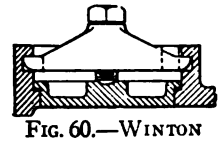

FIG. 60.—WINTON BREECH - BLOCK VALVE CLOSURE.

S. A. E. standard thread, is ½ inch. The yoke must be designed to have the same strength. It is preferably made of a drop forging. If no plugs or cocks screw into the valve plugs, the ends of the yoke can bear on a central boss on the valve plug, otherwise they must be forked and bear on the flange of the plug, leaving the centre free. The advantage of quick removal of the plugs with this method of fastening is lost if a spark plug is screwed into the valve plug. With no spark plug, all that is necessary in order to remove the valve plug is to give the nut on the stud a turn or two, swing the yoke around and lift the plug out. Such a plug can be ground to its seat and no gasket is then required.

Another form of quick removable valve plug embodies the principle of the breech block. A disc or plate fits against a shoulder at the lower end of the valve opening, and a yoke with flattened ends is adapted to engage with its ends in opposite grooves milled in the wall of the opening, which it enters through a slot provided for the purpose. A set screw extends through the centre of the yoke, and by drawing this up tight against the disc at the bottom of the valve plug opening the disc is fixed in place.

Cylinder Head Closures—It is comparatively seldom that cylinder heads are cast entirely closed, although if they are made that way the amount of machine work necessary is reduced. The reason for casting them with an opening is that the cylinder core can then be better supported and the wall thickness will be more uniform. The jacket heads are generally cast with large openings, especially in block cylinders, which are closed by aluminum plates. Fig. 61 shows one rather popular method of closing the two openings in the top of the cylinder casting. A plug is screwed into the opening in the cylinder head. This plug is provided with an integral stud, by means of which the aluminum cover plate is clamped down. Instead of making the stud integral with the plug it can be screwed into it. The stud may be drilled through its centre for the reception of the priming cock. In some motors the openings in the cylinder head and jacket head are closed by separate plugs.

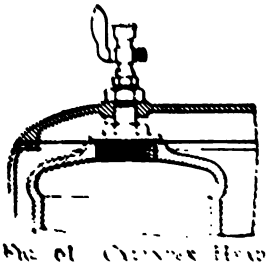

Fig. 61 Cylinder Head Closure

Fan Bracket Support—In a considerable number of cars the bracket for supporting the radiator fan is fixed to the engine cylinder, and if this arrangement is desired, provisions must be made in the cylinder design for the necessary screw holes and machined surface. The bracket usually has quite a long overhang, and a rigid support must therefore be provided with a relatively long vertical base. Fig. 62 shows a typical design. The bracket is held in place by substantial studs screwed into the cylinder wall near the top and bottom of the water space. The bracket itself is provided with oblong holes through which these studs pass and with a set screw on top, the point of which bears against the top stud. By means of this set screw the bracket can be adjusted up and down to get the proper belt tension.

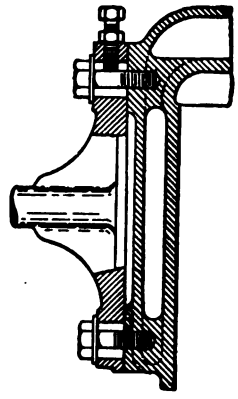

FIG. 62.—FAN BRACKET ATTACHMENT.

CHAPTER VII.

PISTON, PISTON RINGS AND PISTON PIN.

The piston in a gasoline motor serves a triple function. It forms the movable wall of the combustion chamber, allowing that chamber to increase and decrease in volume. It receives the pressure of the expanding gases and transmits this pressure to the connecting rod, and it forms a crosshead through which the side thrust due to the angularity of the connecting rod is transmitted to the cylinder wall.

The piston makes of the combustion chamber a closed vessel of variable capacity. Since the pressure within the combustion chamber is sometimes as high as 400 pounds per square inch, a high degree of gas tightness is essential. The cylinder, as already stated, is bored so as to form as nearly as possible a true cylinder. If the piston were turned to exactly the same diameter as the bore over its whole length it might give a fairly gas tight joint. But this is impossible, owing to the difference in the heat expansion. The piston head heats more than the cylinder wall, because it is not water jacketed, and the head end of the piston also heats more than the open end, which latter is not exposed to the heat of the burning gases, and receives heat only by transmission. These facts must be taken into consideration in designing the piston, which must be made of less diameter at its head end than at its open end, and of less diameter than the bore at its open end. If it were made of the same diameter as the bore, so it was a tight running fit in the cylinder when cold, it would stick when the motor heated up. Since the piston must be made of smaller diameter than the cylinder it cannot be depended upon to insure gas tightness. This quality is attainable only by means of flexible, split metallic rings, called piston rings, three or four of which are placed upon the piston in grooves turned for the purpose in its outer circumference. These rings are originally turned to a somewhat larger diameter than the bore of the cylinder, and a small section is then cut out of them, so that they can

be sprung together to almost go inside the cylinder. Their outer surface is then finished off again while in this compressed state to the exact diameter of the bore. Since the ring was compressed to the diameter of the bore, when in its groove in the piston and inserted into the cylinder, it will exert a pressure against the cylinder wall over its entire surface, and thus insure practical gas tightness.

Allowance for Differences in Heat Expansion—The cylinder wall, which is in direct contact with the cooling water, never rises higher in temperature than the boiling point, and its average temperature at full load may be taken as 200° Fahr. The piston head, however, which is not provided with any cooling means, attains a temperature of about 700° Fahr., which corresponds to the average temperature in the combustion chamber. The open end of the piston will reach a temperature of about 300° or a little more. The temperature of the cylinder walls has repeatedly been determined experimentally, but the temperatures of the piston and rings are based upon theoretical reasoning, since their experimental determination involves great difficulties. As regards the temperature of the piston head, it stands to reason that it will be slightly less than the mean ordinate which would be obtained if a curve were drawn with the cylinder temperature as ordinates and the time of a cycle as the abscissas, since there is little other chance for the cylinder head to dispose of its heat than to the cool gas of the incoming charge. The piston rings, which are on three sides in contact with metal at 500° to 600° Fahr. and on one side with metal at 200° Fahr., will naturally have a temperature about midway between these figures. What concerns us particularly is the differences between the temperature of the cylinder wall and the temperatures of the two ends of the piston and the piston rings, since these determine the differences in expansion that must be provided against. These differences are 500° for the top end of the piston and 100° for the bottom end and the rings. The expansion of cast iron is 0.000556 inch per inch per 100° Fahr., consequently a 4 inch piston must be turned

$$4 \times 5 \times 0.000556 = 0.0111 \text{ inch}$$

smaller than the bore at its head end and

$$4 \times 1 \times 0.000556 = 0.0022 \text{ inch}$$

smaller than the bore at its open end. These are the allowances theoretically required. Slightly smaller allowances are generally made in American water cooled motors, probably because auto-

mobile motors seldom work at full load for any length of time. The subject will be further discussed later on.

Forms of Piston Rings—While the piston ring bears tightly against the cylinder wall nearly all around there is a chance for gas leaks at the cut or split in the ring. Two forms of these cuts are in common use. These are known respectively as the diagonal cut and the lap joint cut, and are illustrated in Fig. 63. It is directly apparent that with the diagonal cut there is a leakage path for the gas if the ends of the ring do not come close together. Some slight space must be left between the ends of the ring to allow for variations in its temperature, as compared with the temperature of the cylinder, for if the ends should come together and the ring heat up still more it would break. The aim, then, should be to make the cut no greater than actually required. Since the difference in temperature of the ring and the cylinder wall is limited to 300 degrees, the heat expansion will be $\pi \times d \times 3 \times 0.000556$. In the case of a 4 inch bore it will be

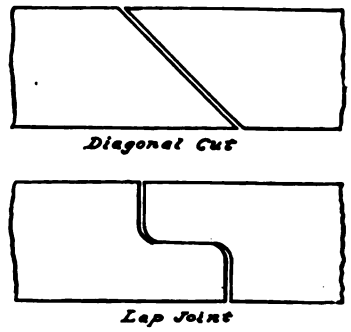

FIG. 63.—PISTON RING JOINTS.

$$3.14 \times 4 \times 3 \times 0.000556 = 0.021 \text{ inch.}$$

The distance apart of the ends when the ring is compressed in the cylinder should therefore be slightly more than 0.021 inch in the circumferential direction. If the ring is cut at an angle of 45 degrees, the actual distance apart should be slightly more than

$$0.021 \times \sin 45^\circ =$$
$$0.021 \times 0.707 = 0.015 \text{ inch,}$$

say, 1-64 inch.

Leakage Around Piston Rings—With a lap jointed ring there is also a small leakage path for the gas at the joint; it is, however, not direct or straight, as in the case of the diagonal joint, but tortuous. This is illustrated in Fig. 64. We found that the piston at its head end must be turned about 0.0111 inch small in diameter, so if it were centred in the cylinder it would have a clearance of 0.0055 inch all around. This is shown exaggerated in the illustration. The tongues or overlapping portions also do not quite fill up the slots cut for them, and the

ring at the cut is only about one-half the depth of the ring groove. The gas, therefore, passes from the piston clearance space into the lap joint clearance space, down the latter space to the bottom of the ring groove, thence into and up the other lap joint clearance and out into the piston clearance, as shown by arrows in the cut.

Another thing that must be taken into account is that the ring, although nicely fitted, is not an absolutely tight fit in its groove. It has a slight amount of play in the groove, and it will bear against one side of the groove or the other, according to the direction of the resultant of the forces acting on it. The slight opening thus left all around between the sides of the piston and the ring gives plenty of chance to the gas to get under the ring during the compression stroke, when the ring is in contact with the lower side of the groove, but fortunately the gas can get out from underneath the ring only through the small joint clearance. During the power stroke the top rings at least will also bear against the lower side of the groove, since the gas pressure on them will exceed the inertia and friction forces.

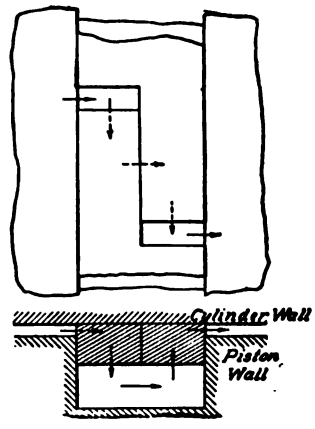

FIG. 64.—LEAKAGE PATH AROUND PISTON RING.

The leakage path due to the joint clearance, as illustrated in Fig. 64, can be reduced in various ways. The lap joint clearance should be made as small as possible, so that the ends of the ring come almost together when the ring reaches its maximum temperature. The minimum clearance can be calculated in the same way as illustrated in connection with the diagonal cut ring. Moreover, although the piston has an average clearance of 0.0055 inch in the cylinder all around, the cuts in the rings can be so distributed over the circumference that at the cut in one ring at least the piston will always bear tightly against the cylinder wall, so there is no chance for the gas to get into the lap joint clearance.

Gas tightness is particularly essential during the compression and expansion strokes. Now, in a motor turning right handedly

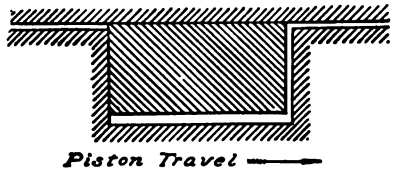

FIG. 65.—POSITION OF RING DURING COMPRESSION STROKE.

the piston is pressed against the right side of the cylinder wall by the connecting rod during the compression stroke, and against the left side of the cylinder wall during the power stroke. So in case four rings are used, the rings should be placed so that all the cuts will be in the plane of connecting rod travel, two on one side, and two on the opposite side of the piston. If only three are used, as is more common, two cuts might be placed on the left side of the piston in the case of a motor rotating right handedly, and one on the right side. The very common practice of spacing the cuts evenly over the circumference is evidently wrong.

Material of Rings—In order to introduce the rings into their grooves they must be sprung out sufficiently to pass over the pistons. The material from which they are made must, therefore, have considerable elasticity, and from this point of view a high carbon spring steel would be the most suitable. But owing to the fact that spring steel is harder than cast iron, such rings would tend to cut the cylinder bore. Cast iron is therefore used, in spite of its limited elasticity. The best grade of tough, dense gray iron should be chosen for the purpose. As a rule the cylindrical castings from which the piston rings are cut are poured from the same "run" in the foundry as the cylinders and pistons. It is claimed, however, that an iron with somewhat less silicon and more sulphur than the ordinary cylinder iron is more suitable for piston rings, being more springy and harder. It is apparent that the strains to which the material of the ring is subjected in

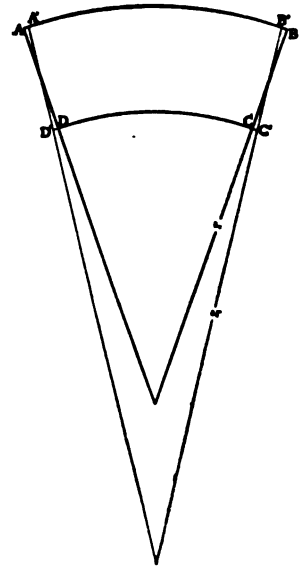

FIG. 66.

ripping it over the piston, and in compressing it in the cylinder, pend upon the thickness of the ring in proportion to the cyl- der bore. The thickness must be so chosen that the safe work- g stress of the material will not be exceeded either in stripping e ring over the piston, or later when the ring is compressed, d the ring should be so designed that the stress in the ring is out the same when it is being put on the piston as when it is the cylinder, as under these conditions a ring exerting a cer- in pressure per square inch against the cylinder wall will be sub- bjected to the least maximum strain, and the chances of eakage will then be a minimum.

Stresses in Piston Rings—In Fig. 66 is represented a sec- m $A\ B\ C\ D$ of a piston ring, the original outside radius of hich is r, and the thickness t. Suppose that in order to strip is ring over the piston it has to be expanded to a radius r_1. e actual change in the radius is comparatively slight, and me of the dimensions in the figure are exaggerated for the rpose of more clearly showing the effects of expanding the g. The fibres at the outer circumference of the ring will be mpressed, and the fibres along the inner circumference of the ng will be extended, the section assuming the form ', B', C', D'. It is shown in text books on the mechanics of aterials that the relative extension of material under tension d its compression under pressure are equal to the stress S, to hich it is subjected, divided by its coefficient of elasticity E. refore, referring to Fig. 66 let S be the tension on the inner es of the ring, and $-S$ the compression on the outer fibres. tension and compression are equal, because the ring is sub- ed to plain bending stresses. We may then write

$$\frac{-S}{E} = \frac{A'B' - AB}{AB} = \frac{A'B'}{AB} - 1,$$

$$\frac{S}{E} = \frac{D'C' - DC}{DC} = \frac{D'C'}{DC} - 1.$$

nsposing,

$$= \frac{-S}{E} + 1 \qquad \text{(34)}$$

$$= \frac{S}{E} + 1 \qquad \text{(35)}$$

But $AB : DC = r : r - t$,

and $A'B' : D'C' = r_1 : r_1 -$

ng the lower proportion by the upper

$$\frac{A'B'}{AB} : \frac{D'C'}{DC} = \frac{r_1}{r} : \frac{r_1 - t}{r - t}.$$

Substituting the values of $\frac{A'B'}{AB}$ and $\frac{D'C'}{DC}$ found in (34) and (35),

$$\frac{-S}{E}+1 : \frac{S}{E}+1 = \frac{r_1}{r} : \frac{r_1-t}{r-t};$$

$$\left(\frac{-S}{E}+1\right)\frac{r_1-t}{r-t} = \left(\frac{S}{E}+1\right)\frac{r_1}{r};$$

$$\frac{r_1-t}{r-t} - \frac{r_1}{r} = \frac{S}{E}\left(\frac{r_1}{r}+\frac{r_1-t}{r-t}\right);$$

$$\frac{S}{E} = \frac{\frac{r_1-t}{r-t} - \frac{r_1}{r}}{\frac{r_1}{r}+\frac{r_1-t}{r-t}} =$$

$$\frac{r(r_1-t)-r_1(r-t)}{r_1(r-t)+r(r_1-t)} =$$

$$\frac{t(r_1-r)}{2rr_1-t(r+r_1)}.$$

Consequently

$$S = E\frac{t(r_1-r)}{2rr_1-t(r+r_1)} \quad \text{.....(36)}$$

This equation gives the stress in the outermost fibres of the ring when expanded to an outer radius r_1 to be stripped over the piston. It is now to be determined what this radius r_1 must be.

If the ring is to be subjected to the same stress when stripped over the piston as when compressed in the cylinder, its outer radius r when in the free state must be a mean between the radius r_1 when it is expanded, and the radius r_2 of the cylinder bore. Now, suppose that the ring is concentric, of thickness t, and that it can be so manipulated that it will form a true circle when expanded so that it will just pass over the piston. Then the outside radius r_1 will be r_2+t. In reality the ring when expanded by applying opposing tangential forces to its end, as shown in Fig. 67, will not form a true circle, but approach

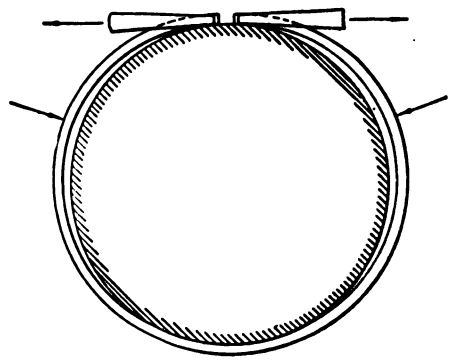

FIG. 67.

an ellipse in form, owing to the fact that when thus expanded the bending moment on the ring is a maximum opposite the cut, and that is where most of the bending takes place. This tendency to localization of the bending can be counteracted by applying pressure to the ring in the direction toward the centre, about 75 degrees on each side of the cut. By applying this expedient when inserting the ring into its groove it need not be expanded to an appreciably greater radius than r_2+t to get it over the piston. We then have

$$r_1 = r_2 + t$$

$$r = r_2 + \frac{t}{2}$$

Inserting these values in equation (36)

$$S = E \frac{\frac{t^2}{2}}{2 r_2^2 - \frac{t^2}{2} + r_2 t} =$$

$$E \frac{t^2}{4 r_2^2 - \frac{t^2}{4} + \frac{r_2 t}{2}}.$$

But r_2 is equal to one-half the cylinder bore, or to $\frac{b}{2}$. Hence

$$S = E \frac{t^2}{b^2 - \frac{t^2}{4} + \frac{b t}{4}} \quad \text{.....(37)}$$

In this discussion we have assumed that the ring is concentric, i. e., of uniform thickness all around, and that when it is stripped over the piston its curvature is changed uniformly over the whole circumference. In practice, however, these conditions do not entirely hold true. Both in expanding the ring and in compressing it the stress will be greatest at the point opposite the cut, and it is, therefore, this part of the ring that demands special investigation, because if that is so proportioned that it is not overtaxed, the rest of the ring will be safe.

In view of the fact that t in actual piston rings is only about $\frac{b}{30}$, the expression $\frac{t^2}{4} + \frac{b t}{4}$ in the denominator of the right hand member in equation (37) can be neglected in comparison with b^2 without appreciable error (less than one per cent.), and the equation then becomes

$$S = E \frac{t^2}{b^2} \quad \text{.....(38)}$$

which may be transformed into

$$t = b\sqrt{\frac{S}{E}} \quad \ldots\ldots\ldots\ldots\ldots\ldots\ldots\ldots\ldots\ldots\ldots\ldots (39)$$

The coefficient of elasticity E of cast iron is about 15,000,000. Since the stress is practically unchangeable, it may be comparatively high, say 15,000 pounds per square inch. These values inserted in equation (39) give

$$t = \sqrt{\frac{15{,}000}{15{,}000{,}000}}\, b = \frac{b}{32} \quad \ldots\ldots\ldots\ldots\ldots\ldots\ldots\ldots (40)$$

With a concentric ring this is nearly the maximum thickness which can be safely gotten on to the piston, though with an eccentric a somewhat greater thickness is permissible at the point opposite the cut.

The general practice in this country is to have the ring one-half as thick at the cut as opposite the cut. In that case, calling t the thickness opposite the cut, we have

$$r_1 = r_2 + \tfrac{3}{4} t$$
$$r = r_2 + \tfrac{1}{2} t$$

which inserted in equation (36) give

$$S = E \frac{\tfrac{1}{2} t^2}{2 r_2^2 - \tfrac{9}{16} t^2 + \frac{r_2 t}{4}}.$$

Neglecting the expression $-\tfrac{9}{16} t^2 + \frac{r_2 t}{4}$, this reduces to

$$S = E \frac{3 t^2}{16 r_2^2}$$

Substituting $\frac{d}{2}$ for r_2 we get

$$S = E \cdot \frac{3}{4} \frac{t^2}{d^2},$$

and assuming the same stress and coefficient of elasticity as above, we get for the permissible thickness opposite the cut

$$t = d\sqrt{\frac{4 S}{3 E}} = \frac{d}{27.5} \quad \ldots\ldots\ldots\ldots\ldots\ldots\ldots\ldots\ldots\ldots (41)$$

This gives about 5-32 inch for a 4 inch piston, and $\frac{3}{16}$ inch for a 5 inch piston.

Pressure Against Cylinder Wall—This pressure is radially outward and should preferably be uniform over the entire surface of the ring. It is balanced by an equal and opposite reaction of the cylinder wall against the ring. We will denote this reaction per square inch by p, and the width of the ring (the dimension in the direction of piston travel) by w.

The reaction of the cylinder wall on the ring produces a bending effect in the latter which subjects the material of the ring to a certain stress. The pressure of the ring against the cylinder wall and the stress in the material of the ring are mutually related, and we will now investigate this relation. We will take a cross section of the ring at C, Fig. 68, and find the bending moment for that section.

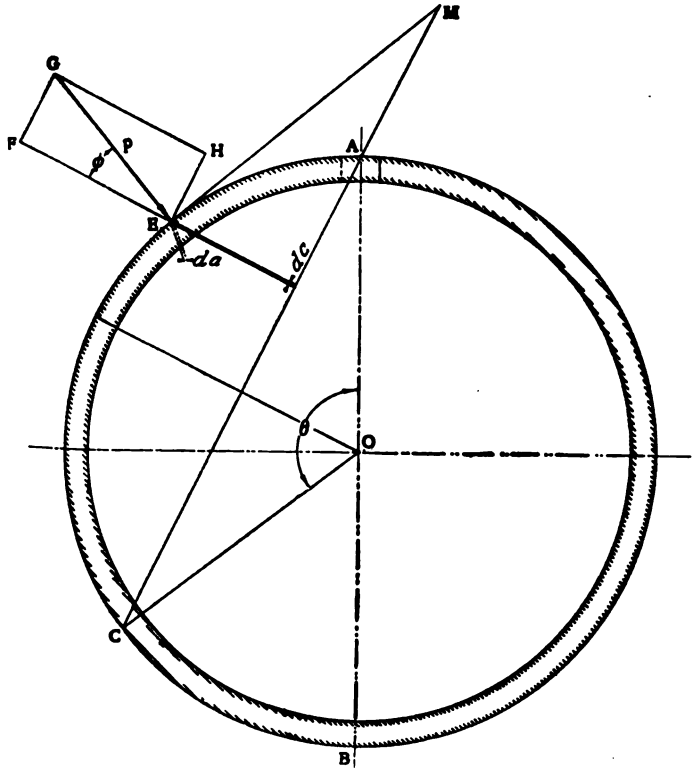

FIG. 68.

Consider a small strip *da* of the ring surface between *A* and *C*. The area of this strip is evidently *w da*, and the total pressure on it, *p w da*. This pressure can be divided into two components, one, *p w da sin φ*, parallel to the cord *A C*, and the other, *p w da cos φ*, perpendicular to the cord *A C*. It is directly apparent that, considering the pressure acting on the entire arc *A C*, the components parallel to cord *A C* vanish,

and it is only the components perpendicular to $A\ C$ that produce a bending moment at C.

Considering the expression for this perpendicular component, we find that

$$da \cos \phi = dc,$$

because

$$\text{Angle } G\ E\ F\ (\phi) = \text{angle } H\ E\ M,$$

$H\ E$ being perpendicular to $E\ F$ and $E\ M$ perpendicular to $E\ G$, and

$$\text{Angle } H\ E\ M = \text{angle } E\ M\ C,$$

$H\ E$ being parallel to $M\ C$. The line $E\ M$ is a tangent to the arc $A\ C$ at E, and comprises, therefore, the short section da of this arc.

The component of the radial pressure on da perpendicular to $A\ C$ is therefore $p\ w\ dc$. That is, that component of the radial pressure on any small strip da across the circumference of the ring which produces a bending moment at C is equal to the product of the area of the projection of that strip on the cord $A\ C$, into the radial pressure. As this applies to every small strip of the arc $A\ C$, it follows that the total pressure producing a bending moment at C is

$$\Sigma\, p\, w\, dc = p\, w\, A\ C.$$

But

$$A\ C = 2\ A\ O \sin \frac{\theta}{2} = 2\, r_2 \sin \frac{\theta}{2}.$$

The above force acts on the point C through lever arms varying in length from zero to $2\, r_2 \sin \frac{\theta}{2}$, the mean length being

$$l = r_2 \sin \frac{\theta}{2},$$

consequently the bending moment at C is

$$M = 2\, p\, w\, r_2^2 \sin^2 \frac{\theta}{2} = \frac{p\, w\, b^2}{2} \sin^2 \frac{\theta}{2}.$$

The resistance to bending of a rectangular section of base w and height t is

$$M_r = \frac{S\, I}{c} = \frac{S\, w\, t^2}{6}.$$

The bending moment is equal to the resisting moment, and we may therefore write

$$\frac{p\, w\, b^2}{2} \sin^2 \frac{\theta}{2} = \frac{S\, w\, t^2}{6},$$

from which it follows that the radial pressure of the ring is

$$p = \frac{S}{3 \sin^2 \frac{\theta}{2}} \frac{t^2}{b^2} \quad \ldots\ldots\ldots\ldots\ldots\ldots\ldots\ldots\ldots\ldots (42)$$

We started out with the supposition that p was constant, and by analyzing equation (41) we find that in case the thickness of the ring is constant, p varies inversely as the square of the sine of half the angular distance from the cut in the ring. The only way in which p can be made constant is by varying the thickness t of the ring with the angular distance from the cut, t appearing in the numerator and $\sin \frac{\theta}{2}$ in the denominator of the expression for p. Equation (41) may be transformed to read.

$$t_r = b\sqrt{\frac{3p}{S}\sin^2\frac{\theta}{2}}.$$

For the point opposite the cut, for which $\frac{\theta}{2} = 90$ degrees and $\sin \frac{\theta}{2} = 1$, we have

$$t_{180} = b\sqrt{\frac{3p}{S}}.$$

But the thickness at this point has already been fixed by equation (39), which may be changed to read

$$t = b\sqrt{\frac{S}{E}}.$$

Hence we may write

$$b\sqrt{\frac{S}{E}} = b\sqrt{\frac{3p}{S}}$$

$$\frac{S}{E} = \frac{3p}{S}$$

$$p = \frac{S^2}{3E} \quad \text{.....(42}$$

This equation shows that the radial pressure of the ring varies only as the square of the stress in the material; hence, since the permissible stress is limited, the radial pressure is closely limited as to its higher values. If we assume the former values for the working stress and coefficient of elasticity, viz., $S = 15{,}000$ pounds per square inch and $E = 15{,}000{,}000$, then

$$p = \frac{15{,}000 \times 15{,}000}{3 \times 15{,}000{,}000} = 5 \textit{ pounds per square inch.}$$

Eccentric vs. Concentric Rings—At 90 degrees from the cut, for which

$$\frac{\theta}{2} = 45 \text{ degrees},$$

$$\sin \frac{\theta}{2} = 0.707,$$

and

$$\sin^2 \frac{\theta}{2} = 0.5,$$

the thickness should be

$$t_{90} = b\sqrt{\frac{3\,p}{2\,s}} = t\sqrt{\tfrac{1}{2}} = 0.707\,t.$$

At the ends of the ring, that is, at the cut, for which

$$\text{angle}\,\frac{\theta}{2} = 0,$$

$$\sin^2 \frac{\theta}{2} = 0,$$

and the thickness of the ring should therefore be zero. This condition must be fulfilled if a ring which is originally turned on its outer circumference to a circle of greater diameter than the bore is to fit into the bore with a uniform pressure over its entire surface. In practice, however, it would be impossible to reduce the thickness of the ring to nothing at the cut. Not only would such a ring be exceedingly delicate in handling, but it would certainly not be gas tight near the cut. The above mathematical discussion, however, clearly shows the reason for making piston rings eccentric, that is, of less thickness near the cut than opposite the cut. This is done with the object of making the pressure on the cylinder wall more nearly equal all around the ring. Eccentric rings are almost universally used in this country, though in Europe concentric (uniform thickness rings) are extensively used. A noted German writer, Hugo Güldner, in his work on the internal combustion motor, recommends the use of concentric rings, because, as he says, the object of eccentric rings, viz., uniform pressure all around, cannot be attained anyhow. While an absolutely uniform pressure cannot be attained in this way, uniformity can be approached, and that is worth something. Of course, this advantage is partly offset by the fact that the eccentric ring leaves considerable space in the groove near the cut and the gas will pass around it easier if it does not make a tight joint with the side of the groove.

Width of Ring—The consensus of opinion among engineers is that it is best to make the rings comparatively narrow. For instance, for a 5 inch piston, four rings each 9-32 inch wide, would be considered superior to three rings each 3/8 inch wide. A good rule is to make the width of the ring

$$w = \frac{b}{20} \qquad (43)$$

If the rings are made narrower the length of the piston can be reduced and the weight of the reciprocating parts thus minimized, which increases the speed of maximum output, and consequently the output itself. A shorter piston also means a shorter cylinder, and consequently a lighter motor. Besides, the amount of power lost on account of the friction of the rings increases almost directly with the width of the rings. If the rings are carefully made so they bear firmly against the cylinder wall all around, nothing will be gained by making the width of the rings more than one and one-half times their maximum thickness.

Manufacture of Rings—Piston rings are made from hollow cylindrical castings or blanks, Fig. 69, cast with three or four

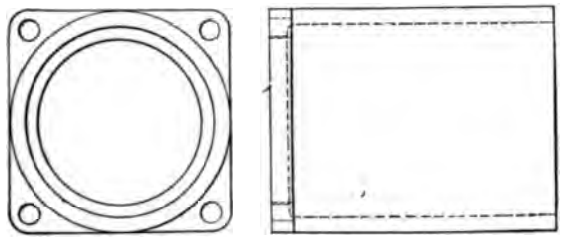

FIG. 69.—PISTON RING BLANK.

lugs at one end, by means of which they can be bolted to the face plate of a lathe or to a special plate, which in turn is bolted to the face plate. The castings are generally made of sufficient length to furnish from 12 to 15 rings each. As a rule, the blanks are turned up on the outside and bored out on the inside, but in some cases they are not finished on the inside, because it is considered that the scale makes the ring more springy. At the end where the lugs are the casting may be provided with a flange to stiffen it while it is being machined.

A fixture for turning the ring blanks eccentrically is shown in Fig. 70. A circular disc *A* is secured to the face plate *B* of the lathe by means of three bolts. It swivels around the top bolt *C*, this being permitted by oblong slots through which the other two bolts *D* and *E* pass. The swivel motion is limited by a stop pin *F*. The ring blank is bolted to the plate *A* by means of four studs *S*. In machining up the casting, the disc *A* is first swung over to one side as far as stop pin *F* permits, and fixed in place, and the outside is turned up. Then the disc is swung over to the opposite side and tightened, and the casting is bored

and

$$\sin^2 \frac{\theta}{2} = 0.5,$$

the thickness should be

$$t_{90} = b\sqrt{\frac{3\,p}{2\,s}} = t\sqrt{\tfrac{1}{2}} = 0.707\,t.$$

At the ends of the ring, that is, at the cut, for which

$$\text{angle}\,\frac{\theta}{2} = 0,$$

$$\sin^2 \frac{\theta}{2} = 0,$$

and the thickness of the ring should therefore be zero. This condition must be fulfilled if a ring which is originally turned on its outer circumference to a circle of greater diameter than the bore is to fit into the bore with a uniform pressure over its entire surface. In practice, however, it would be impossible to reduce the thickness of the ring to nothing at the cut. Not only would such a ring be exceedingly delicate in handling, but it would certainly not be gas tight near the cut. The above mathematical discussion, however, clearly shows the reason for making piston rings eccentric, that is, of less thickness near the cut than opposite the cut. This is done with the object of making the pressure on the cylinder wall more nearly equal all around the ring. Eccentric rings are almost universally used in this country, though in Europe concentric (uniform thickness rings) are extensively used. A noted German writer, Hugo Güldner, in his work on the internal combustion motor, recommends the use of concentric rings, because, as he says, the object of eccentric rings, viz., uniform pressure all around, cannot be attained anyhow. While an absolutely uniform pressure cannot be attained in this way, uniformity can be approached, and that is worth something. Of course, this advantage is partly offset by the fact that the eccentric ring leaves considerable space in the groove near the cut and the gas will pass around it easier if it does not make a tight joint with the side of the groove.

Width of Ring—The consensus of opinion among engineers is that it is best to make the rings comparatively narrow. For instance, for a 5 inch piston, four rings each 9-32 inch wide, would be considered superior to three rings each ⅜ inch wide. A good rule is to make the width of the ring

$$w = \frac{b}{20} \qquad (43)$$

If the rings are made narrower the length of the piston can be reduced and the weight of the reciprocating parts thus minimized, which increases the speed of maximum output, and consequently the output itself. A shorter piston also means a shorter cylinder, and consequently a lighter motor. Besides, the amount of power lost on account of the friction of the rings increases almost directly with the width of the rings. If the rings are carefully made so they bear firmly against the cylinder wall all around, nothing will be gained by making the width of the rings more than one and one-half times their maximum thickness.

Manufacture of Rings—Piston rings are made from hollow cylindrical castings or blanks, Fig. 69, cast with three or four

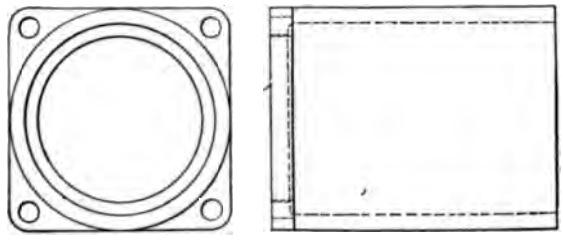

FIG. 69.—PISTON RING BLANK.

lugs at one end, by means of which they can be bolted to the face plate of a lathe or to a special plate, which in turn is bolted to the face plate. The castings are generally made of sufficient length to furnish from 12 to 15 rings each. As a rule, the blanks are turned up on the outside and bored out on the inside, but in some cases they are not finished on the inside, because it is considered that the scale makes the ring more springy. At the end where the lugs are the casting may be provided with a flange to stiffen it while it is being machined.

A fixture for turning the ring blanks eccentrically is shown in Fig. 70. A circular disc *A* is secured to the face plate *B* of the lathe by means of three bolts. It swivels around the top bolt *C*, this being permitted by oblong slots through which the other two bolts *D* and *E* pass. The swivel motion is limited by a stop pin *F*. The ring blank is bolted to the plate *A* by means of four studs *S*. In machining up the casting, the disc *A* is first swung over to one side as far as stop pin *F* permits, and fixed in place, and the outside is turned up. Then the disc is swung over to the opposite side and tightened, and the casting is bored

rings are held by means of a magnetic chuck. Such a piston ring grinder is illustrated in Fig. 72.

Next the rings are cut open. This operation differs, of course, according to whether the ring is to have a diagonal joint or a lap joint. In either case the cutting is done on a hand miller with a cutter of exactly the right width for the slot to be cut. After this operation it is best to submit the rings to a test before doing any further work upon them, so as to minimize the waste due to rejections. The easiest way to make this test consists in forcing the ring over a tapered arbor to a certain mark and rejecting all rings which show more than a certain permanent set, determined by measuring the width of the slot before and after the test.

Next the rings are ground on the outside, and in order that they may perfectly fit the cylinder after being ground and exert

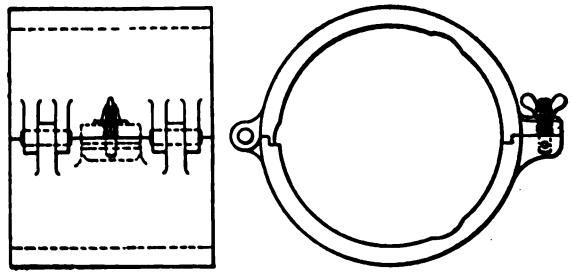

FIG. 73.—PISTON RING CLAMP.

an even pressure all around their circumference, as nearly as that is possible, they are first compressed in a fixture, then clamped on an arbor while in the compressed state, and finally ground down to the exact diameter of the cylinder bore. A clamp suitable for compressing the rings is illustrated in Fig. 73. It consists of two semi-cylindrical shells of cast iron with double hinges on one side and a hinged clamp screw and corresponding lugs on the other. This clamp is bored out to a diameter equal to the bore, plus the grinding allowance. The rings are assembled into this clamp in such a way that the cuts are staggered, which makes them hold together better after the clamp is removed. This staggering is facilitated by three slots cut in the inner surface of the clamp at equal angular distances. When the rings are all assembled in the clamp, the latter is drawn up tight and is passed over the arbor, Fig. 74, on which the rings are to be ground. This arbor is provided with two collars. The one on the left is of such a diameter that the clamping

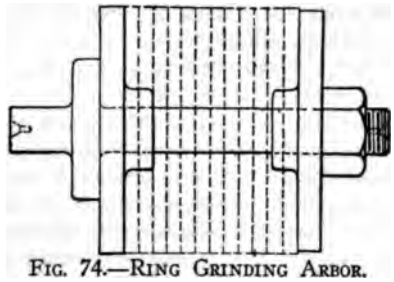

FIG. 74.—RING GRINDING ARBOR.

fixture will just pass over it, by which means the rings are centred on the arbor. The collar on the right hand side is of the exact diameter of the cylinder bore to which size the rings are to be finished. The collar on the left may be integral with the arbor, but if it is loose it should be held from turning by a pin or key, as should the other collar. This collar is drawn up tightly by means of a hexagonal nut, the clamp is then removed, the arbor is placed in the lathe or grinding machine and the rings are ground to size. While one set is thus being ground the clamp can be filled up again with rings. The collars should preferably be case hardened.

Hand Fitting of Rings—The above description applies to the method of manufacturing piston rings in large plants. When rings are made on a small scale, as for experimental motors, it is, of course, impossible to install the somewhat elaborate equipment described above, and the rings are then fitted by hand. They are cut off from the blank with a tool which gives a very smooth surface, the feed being comparatively slow, so that the sides will fit a carefully turned groove without any further finishing. After the ring has been split by means of a saw or file (the latter in the case of the lap joint ring), the workman will file the ring off on the outside at those points where he knows from experience that metal has to be removed in order to make the ring fit the bore. This applies particularly to the ends of the ring near the cut. Next, the surface of the bore is smeared with a mixture of red lead and oil, the ring is introduced into the bore, then withdrawn, and any spots which are reddened are filed down more, because the radius at these points must evidently be reduced in order to make those parts of the ring which are not reddened bear against the cylinder wall. In this way, after repeated trials, a fair fit of the ring in the cylinder is finally obtained. The ring can be further fitted after the motor has been run for some time, when it will be noticed upon removing the piston from the

cylinder that the rings are polished at some points and blackened with carbon at others, where the gases have blown through. By filing down the polished portions of the ring, the degree of gas tightness can be further increased.

Peening the Rings—In foreign shops piston rings are often fitted by peening. This operation consists in striking the surface of the ring sharp blows with a special peening hammer while it is being held on an anvil. Successive blows are struck at short distances until the entire portion of the ring which seems to have too big or too small a curvature has been covered. The blows from the peening hammer spread the metal, consequently by peening the ring on the outside the radius of curvature of that portion of the ring which is being peened is reduced, while by peening the ring on the inside the radius of curvature is increased. The method is illustrated in Fig. 75. One American firm manufactures concentric rings which are peened by means of a special machine to equalize the pressure all around.

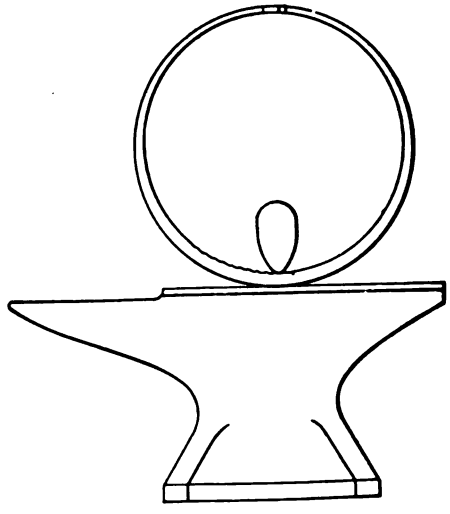

FIG. 75.—PEENING PISTON RINGS.

Dimensions of Ring Blanks—We will assume that the ring is to be eccentric, that its maximum thickness is to be $b/27.5$ and its minimum thickness $b/55$. Then the outside diameter of the finished ring in the free state is evidently

$$b + \frac{\frac{b}{27.5} + \frac{b}{55}}{2} = 1.027\,b.$$

For grinding, an allowance of 0.008 b should be made. Hence the blank should be turned to an outside diameter

$$d_0 = 1.027\,b + 0.008\,b = 1.035\,b \qquad (44)$$

and to an inside diameter

$$d_1 = b - 0.027\,b = 0.973\,b \qquad (45)$$

In splitting the ring, enough stock must be taken out so that when the ends are brought to within $\frac{b}{250}$ inch of each other, the new diameter is equal to the bore plus the finish allowance, that is,

$$b + 0.008\ b = 1.008\ b.$$

The outer circumference must therefore be reduced by

$$1.035\,\pi\,b - 1.008\,\pi\,b = 0.027\,\pi\,b = 0.085\ b\ \textit{inch}.$$

The slots cut are equal in width to this reduction in the circumference plus the clearance allowance, which is $\frac{b}{250}$ or 0.004 b, making a total of 0.089 b, say 0.09 b.

The above rules for dimensioning the rings are based on a stress of 15,000 pounds per square inch in the metal when the ring is compressed in the bore and slightly more when it is stripped over the piston (because of the impossibility of expanding it so its inner circumference will just fit the piston). If the iron from which the rings are made will not stand this stress without taking an undue permanent set, then the formulæ can be changed on the basis of a lower stress. But it is desirable to have the rings as stiff as the material will stand, as then the cylinder will be more nearly gas tight and there will be less trouble from carbon adhering to the finished surface of the bore.

The reason why quite a few manufacturers favor the diagonal joint, when the lap joint is generally considered to be better from the standpoint of gas tightness, is undoubtedly that the tongues of a lap jointed ring for an automobile motor are very small and correspondingly delicate. For a 4 inch bore, for instance, the tongues are only about 3-32 inch wide. In order to make them less breakable they should be provided with a fillet, as shown in Fig. 76. It is also advisable to have the tongues somewhat shorter than the length that must be cut out of the ring in order to reduce its diameter sufficiently. For instance, it was stated above that practically ⅜ inch must be cut out of a 4-inch ring to allow it to be compressed from the original diameter to the diameter of the bore. But a ¼ inch tongue would be

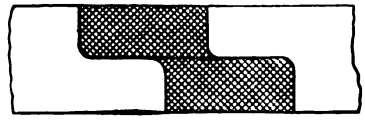

FIG. 76.—SLOTTING LAP JOINT RING.

easily long enough, and the two slots in the ring must then be milled so that they overlap ⅛ inch. After milling, the inner faces of the tongues, which are to go together, must be dressed up with a fine file and before the ring is finally passed on to the stock room one of the things that should be ascertained by the inspector is that when compressed to an outside diameter equal to the bore there is a clearance at the end of the tongues equal to 0.004 *b*.

Diagonal cut rings are most extensively used at present for automobile motors. The angle made by the sides of the cut with the sides of the ring varies between 30 and 45 degrees. The amount to be cut out of the ring in the circumferential direction is, of course, the same as in the case of the lap jointed ring, viz., 0.09 *b*. But the milling cutter used in cutting the slot should be only 0.09 *b* sin α in width; that is, for a 45 degree slot cutter should be 0.064 *b* wide and for a 30 degree slot 0.045 *b*.

Some manufacturers, in order to insure that the top ring will bear firmly against the cylinder wall, cut a couple of small slots in its top side, so the pressure in the combustion chamber will get into the groove and press the ring out. This has the advantage that the ring pressure against the cylinder wall will be

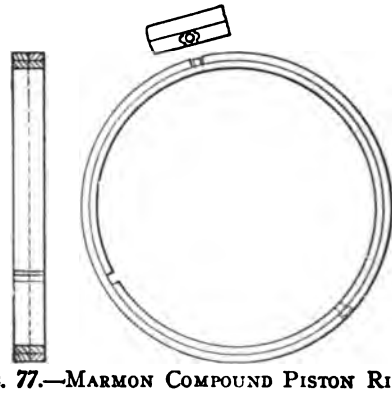

FIG. 77.—MARMON COMPOUND PISTON RING.

greatest when gas tightness is most essential, but it adds to the friction and wear.

Special Rings—A number of manufacturers have adopted special designs of piston rings, with the object of preventing the leakage due to the cuts in the ordinary ring. A ring of this type, the Marmon, is illustrated in Fig. 77. It consists of one wide concentric ring which goes into the bottom of the groove, and two narrow concentric rings which are placed in the top of the groove. All three of the rings are slotted straight across, and the three cuts are spaced 120 degrees apart, the narrow rings being held in position on the wide ring by pins riveted into the latter. The advantage of this compound ring is that the gas cannot blow through the joints, owing to the fact that the joints in adjacent rings are located at an angular distance of 120 degrees and the narrow rings fit nicely together on their adjacent sides, where they are ground, and are pressed against on their under side by the wide ring. Two such compound rings are used on each piston.

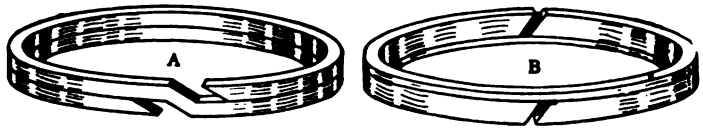

FIG. 78.—SPECIAL FORMS OF PISTON RINGS.

Considerable ingenuity has been exercised in recent years in the elimination of the gap in the ring, which is one of the causes of leakage. Abroad a ring comprising two complete turns, known as the Lehmann double spire ring (Fig. 78A), seems to have considerable vogue. It is a concentric ring and apparently is cut with a very fine circular saw after the blank has been turned up and cut off. In this country the leakproof piston ring, shown in Fig. 78 at B, has been on the market for some years. It consists of two separate rings, one having an outward and the other an inward flange, the flange on one ring obturating the slot in the other. Both rings are turned concentrically, and uniform pressure is aimed at by placing the slots on opposite sides, so that the non-uniformity of the outward pressure of one ring is compensated by that of the other. The separate rings are prevented from sliding upon one another by a pin, but the complete ring is free to turn in the groove.

Pinning Rings—If the rings are to remain in a certain position in the grooves, they must be prevented from rotating by means of pins. In large gas engines the rings are always pinned, and the same practice was formerly followed in the automobile industry, but, owing to the fact that pinning of the very small rings required for automobile motors involves considerable difficulty, it has been largely given up. The argument in favor of pinning is that if the rings are free they may rotate in their grooves, and it may happen that all of the cuts come in line with each other, in which case the gas tightness would be seriously impaired. Automobile manufacturers, however, have reached the conclusion that the chances of all of the cuts coming in line are exceedingly small, and even in that case there will not be such serious leakage if the joint clearance is small. In heavy gas engine practice it is customary to rivet a pin into the piston wall at the middle of the groove and drill a hole through the ring at the middle of its width, into which the pin may extend. But with rings as narrow as commonly used for automobile motors, even a one-sixteenth inch hole would seriously weaken the ring, by concentrating the stress. Consequently, about the only practical method of pinning a ring consists in drilling two small holes through the ring at that point where the slot is to come, at a distance apart equal to the width of the slot, so that when the ring is slotted and the ends are brought together there will be a space at the joint for the pin. There is undoubtedly less need for pinning the rings when both cylinder and rings are ground truly cylindrical than when they are fitted to each other by a prolonged "running in" process.

Handling Piston Rings—It has already been pointed out that piston rings, especially for such small cylinders as are used in automobile work, are extremely delicate and must be handled very carefully when placed on the piston, and still more so when taken off. In expanding the ring previous to stripping it over the piston, pressure must be applied to the free ends evenly, and various simple tools for this purpose have been devised.

The Piston Pin—The form and dimensions of the piston are determined by both the piston rings and the piston pin, and, having concluded our study of the piston rings, it will be advisable to take up the piston pin before passing on to the piston itself. The piston pin is a cylindrical metal part which is generally firmly secured at its ends in bosses cast integral with the piston, and whose central portion has a bearing in the small end of the connecting rod. Sometimes the arrangement is re-

versed and the piston pin is clamped in the small end of the connecting rod and has bearings in the piston bosses. The piston pin dimensions are calculated by considering the pin first as a bearing journal carrying a certain load per square inch of projected area, and, secondly, as a beam supported at both ends and uniformly loaded between supports. A tubular pin is preferable to a solid one, because for the same maximum fibre strain and bearing pressure it will be lighter. Hence, the piston pin is generally made hollow.

Maximum Explosion Pressures—In determining the proper diameter of the piston pin (as well as other parts subjected to the force of explosion) account must be taken of the fact that widely different compression pressures are in use, and that in consequence the explosion pressures in different automobiles differ greatly. Of modern stock car motors some use a compression pressure of 60 pounds per square inch gauge and others as high as 90 pounds. The maximum explosion pressures are roughly proportional to these figures, and it is obvious that if the explosion pressure in one motor is 50 per cent. greater than in another, the former should have relatively stronger parts.

The maximum explosion pressure is a somewhat elusive figure, for it depends not only on the compression ratio but also on the form of the compression chamber, the location of the spark plug terminals, the intensity of the spark, the temperature of the cylinder walls and possibly other factors. The maximum pressure undoubtedly occurs when, owing to defective ignition, several charges have been missed and the motor speed has been reduced, in consequence of which the compression space contains an unusually large charge of pure mixture. It is obvious that no very accurate figure can be given for the maximum explosion pressure, but we will not be far wrong in assuming that this

TABLE IV.

Compression Ratio (r).	Explosion Pressures Maximum	Normal
3	230	173
3.2	250	187
3.4	274	205
3.6	298	224
3.8	321	241
4	344	258
4.2	368	276
4.4	392	294
4.6	414	313
4.8	437	323
5	460	345

pressure is four times the absolute compression pressure based on the assumption that the cylinder is filled with charge to atmospheric pressure at the beginning of the compression stroke. This gives maximum pressures for different compression ratios, as compiled in Table IV.

Calculation of Piston Pin—The length of the bearing portion of the piston pin should be as great as possible, but it is limited by the consideration that if the pin is fixed in the piston bosses the latter must be sufficiently long to provide room for a means for locking the pin, such as a set screw. In automobile motors the maximum length available for the bearing is equal to about one-half the bore. Therefore

$$l = \frac{b}{2} \qquad (46)$$

With a maximum explosion pressure p per square inch, as determined from the above table, the total pressure on the piston is

$$P = \frac{\pi b^2 p}{4}.$$

When the motor is being started or is running at very low speed the pressure on the piston pin is the same as that on the piston. At high speed the former is considerably less than the latter, owing to the inertia of the piston, which opposes the force of the explosion. But the size of the piston pin should be governed by the maximum pressure sustained by it, and the inertia may therefore be neglected.

If we denote the diameter of the pin by d, then the projected bearing surface is

$$s = dl = \frac{d\,b}{2},$$

and the maximum unit bearing pressure is

$$\frac{\frac{\pi b^2 p}{4}}{\frac{d\,b}{2}} = \frac{\pi b p}{2 d}.$$

The average pressure on piston pin bearings is about 2,500 pounds per square inch. This may seem very high, but is permissible because the rubbing speed is so low. It, however, necessitates the use of a hard bearing metal lining, such as phosphor bronze or special bearing bronze in the connecting rod.

Hence

$$\frac{\pi b p}{2 d} = 2{,}500$$

$$d = \frac{\pi b p}{5{,}000} = \frac{b p}{1{,}600} \text{ (appr.)} \qquad (47)$$

The inside diameter of the pin may be determined as follows: The pin is one of the reciprocating parts and should be as light as possible—consistent with the necessary strength. It is, therefore, generally made of a material of high tensile strength, such as high carbon steel, nickel steel or nickel-chrome steel. If 3½ per cent. nickel or an equally tenacious steel is used a working stress of 20,000 pounds per square inch may safely be allowed.

The piston pin may be regarded as a uniformly loaded beam

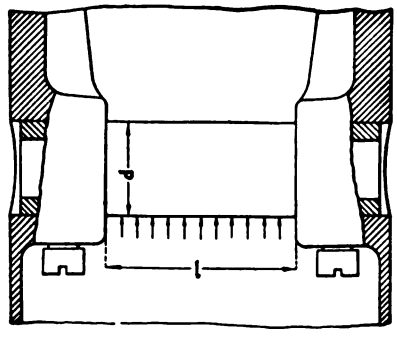

FIG. 79.

supported at both ends (Fig. 79). It is made a pretty tight fit in the bosses, and the latter are rendered rigid by a wide rib connecting them to the cylinder head. Calling P the total pressure on the pin and l its length between supports, the maximum bending moment is

$$\frac{Pl}{8} = \frac{Pb}{16} = \frac{\pi b^3 p}{64}.$$

The resisting moment of a hollow section of outside diameter d and inside diameter d_1 is

$$M_r = \frac{S\pi}{32}\left(\frac{d^4 - d_1^4}{d}\right).$$

Equating the bending and resisting moments,

$$\frac{\pi b^3 p}{64} = \frac{S\pi}{32}\left(\frac{d^4 - d_1^4}{d}\right)$$

$$\frac{d b^3 p}{2S} = d^4 - d_1^4$$

$$d_1^4 = d^4 - \frac{d b^3 p}{2S}$$

and

$$d_1 = \sqrt[4]{d^4 - \frac{d\,b^3\,p}{2\,S}} \quad \ldots\ldots\ldots\ldots\ldots\ldots\ldots\ldots\ldots\ldots (48)$$

We will now calculate the sizes for a piston pin for a 4x5 inch motor with a compression ratio of 4.5. The maximum explosion pressure with this compression ratio is 400 pounds per square inch. The length of bearing is

$$\frac{b}{2} = 2 \textit{ inches.}$$

The outside diameter of the pin is

$$\frac{b\,p}{1{,}600} = \frac{4 \times 400}{1{,}600} = 1 \textit{ inch.}$$

The inside diameter is

$$\sqrt[4]{1^4 - \frac{1 \times 4^3 \times 400}{2 \times 20{,}000}} = 0.77 \textit{ inch,}$$

say ¾ inch.

If ordinary carbon steel is used it is better to limit the stress to 15,000 pounds per square inch, and the inside diameter would then work out to about ⅝ inch in the above example. It must be remembered that the piston pin works under rapidly alternating stress; that is, under the most severe conditions possible. The ends of the bore through the pin are frequently tapered out, since there is comparatively little strain on the pin there. The pin is always hardened and ground.

Piston Bosses—The diameter of the piston bosses must be about 1.5 *d*, where *d* is the outside diameter of the piston pin, and as a rule the bosses are slightly tapered, increasing in diameter toward the piston wall.

Locking Piston Pins—The piston pin must be prevented from moving lengthwise in the piston bosses or "drifting," for if one of its ends should come in contact with the cylinder it would soon start to cut the cylinder bore. In order to minimize the cutting if the pin should come loose, it is well to round off the outer edges of the pin when it is being machined.

One method of holding the pin in place lengthwise consists in placing a piston ring around the piston central with the piston pin, as shown at *A*, Fig. 80. This ring is usually made of somewhat greater width than the regular piston rings, but of the same maximum thickness. A second method, which is employed on quite a number of foreign motors, is illustrated at *B*. A hole is drilled through the wall of the hollow piston pin to

receive the tapered end of a pin screw screwed through the wall of the piston boss. The end of the piston pin is split through the centre of the hole for the locking screw with a saw, so that the pin will be expanded by the tapering portion of the pin screw and securely held in the piston boss. The pin screw is prevented from unscrewing by means of a split pin, the projecting ends of which are longer than the distance of the screw

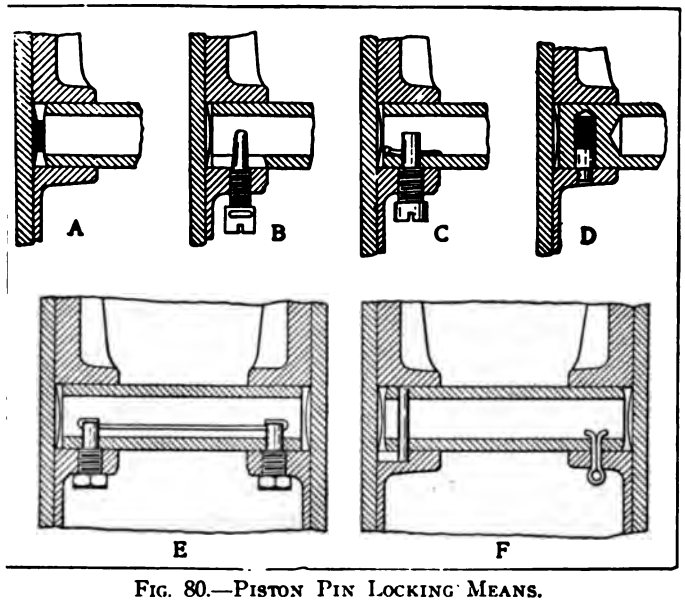

FIG. 80.—PISTON PIN LOCKING MEANS.

from the piston wall. A somewhat similar method is shown at *C*. In this case the pin of the locking screw is not tapered, and instead of the split pin through the head of the screw, a nail or pin is passed through a hole in the pin of the pin screw inside the hollow piston pin.

At *D*, Fig. 80, is shown a patented locking device used on the motors of the Autocar Company. That portion of the piston pin where the locking device comes is left solid, and a radial hole is drilled into it into which is inserted first a coiled spring and then a double diameter plunger. When the piston pin is put in place this plunger is "submerged" in the hole, and when the plunger comes opposite a hole drilled in the wall of the piston boss, the outer, smaller diameter portion of the plunger will enter

this hole, and thus lock the piston pin in place. At *E* is shown the locking method employed by the Locomobile Company of America. This is very similar to the method illustrated at *C*, except that in place of the pin used at *C* a wire is passed through the holes through the two pin screws and has its ends turned back. At *F* is shown the locking means employed on the Franklin motor. The piston pin is held from rotating by a pin passing transversely through one of its ends and into a slot cut in the wall of the piston boss from the outside of the piston; it is held against longitudinal motion by a split pin passing through the piston boss and piston pin wall at the other side of the piston.

Piston Pin Fastened in Connecting Rod.—Quite a few manufacturers now secure the piston pin in the connecting rod small end, so that the pin has bearings in the piston bosses. One advantage of the arrangement is that larger bearing surfaces can be secured in this way than with the pin bearing in the connecting rod. Among the American makers who follow or have followed this practice may be mentioned Reo, Hupp, Jeffery and Briscoe. The length of the bearing surface can be made as much as 0.7 *b* with this construction. The outside diameter may be found by means of equation (47). In order to find the required inside diameter we proceed as follows: The ends of the pin in this case form cantilever beams uniformly loaded, the total load on each being $\frac{P}{2}$ If we consider that the projecting end of the pin is 0.35 *b* then the maximum bending moment is evidently

$$\frac{\frac{P}{2} \times 0.35\, b}{2} = 0.0875\, P b = \frac{0.0875\, \pi\, b^3 p}{4}.$$

The resisting moment is again

$$\frac{S\pi}{32}\left(\frac{d^4 - d_1^4}{d}\right).$$

Therefore

$$\frac{0.0875\, \pi\, b^3 p}{4} = \frac{S\pi}{32}\left(\frac{d^4 - d_1^4}{d}\right)$$

$$0.7\, b^3 p = S\left(\frac{d^4 - d_1^4}{d}\right)$$

$$\frac{0.7\, b^3 p\, d}{S} = d^4 - d_1^4$$

$$d_1^4 = d^4 - \frac{0.7\, b^3 p\, d}{s}$$

$$d_1 = \sqrt[4]{d^4 - \frac{0.7\, b^3 p\, d}{s}}$$

When the piston pin has bearings in the piston bosses it is generally secured in the connecting rod by means of a clamping screw which passes through a split boss on the side of the hub at the upper end of the rod. The hole for the screw is drilled in such a position that the screw will pass slightly beneath the surface of the piston pin, the latter being grooved for the purpose. The screw may be locked in position by means of a spring washer, but in order to insure absolute security it is well to add a split pin, passed through the head of the screw,

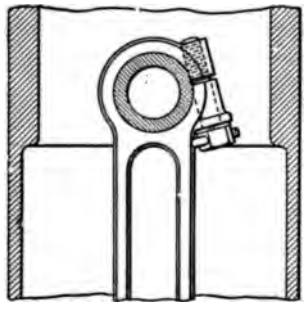

FIG. 81.

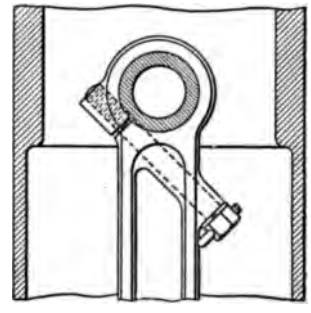

FIG. 82.

of such a size that the connecting rod will prevent the screw from turning. The most common arrangement is illustrated in Fig. 81 and a variation is shown in Fig. 82.

Where the piston pin has its bearings in the piston pin bosses it is not necessary that the latter should be provided with bearing bushings, as cast iron is a good bearing material under low-speed operating conditions, and it is customary to have the pin bear on the bosses direct. Some makers have the piston pin free in both the piston and the rod and merely provide against drifting by a spring ring of square steel lodged in a groove in each piston boss bore near the outer end.

Side Pressure on Cylinder Wall—It was shown in a previous chapter that when the momentary effective pressure on the piston per square inch of piston head area is denoted by P_p and the angle which the connecting rod makes with the cylinder axis by ϕ, then the reaction of the cylinder wall against the piston per square inch of piston head area is

$$P_s = P_p \tan \phi. \quad \text{(Equation 25A).}$$

The pressure of the piston against the cylinder wall is equal and opposite, and for practical purposes may be represented by the same equation. It is then necessary to find the values of the resultant pressure and of tangent ϕ for different points of the stroke and multiply corresponding values together. The effective piston pressure is equal to the resultant of the momentary gas pressure in the cylinder and the inertia force. It will be convenient to take points corresponding to the completion of 0.1. 0.2, 0.4, 0.6 and 0.8 of the stroke, beginning at the top end, and determine the values of the resultant pressure and of tan ϕ for these points. We will take the indicator diagram shown in Fig. 15 as a basis. The inertia forces are obtained from Table I, and are added to the corresponding gas pressures. The respective values of the gas pressures and inertia forces, and the resultant pressures, are given in the following table:

Point of stroke	0.1	0.2	0.4	0.6	0.8
Gas pressure	192	151	98	68	52
Inertia force	—95	—65	—11	+33	+63
Resultant	97	86	87	101	115

The next problem is to find the values of tangent ϕ for the different points on the stroke. The angle ϕ which the connecting rod makes with the cylinder centre line depends upon the angular position θ of the crank and the ratio n of the connecting rod to the length of stroke—

$$\sin \phi = \frac{\sin \theta}{2n} \text{ (equation 18 A)}$$

We also found (equation 20) that the distance of the piston head from the top end of the stroke is

$$x = \frac{l}{2}(1 - \cos \theta) + nl\left(\frac{\sin^2 \theta}{8n^2}\right)$$

$$= \frac{l}{2}\left(1 - \cos \theta + \frac{\sin^2 \theta}{4n}\right).$$

Multiplying both sides by $4n$,

$$4nx = \frac{l}{2}(4n - 4n\cos \theta + \sin^2 \theta).$$

Substituting $1 - \cos^2 \theta$ for $\sin^2 \theta$,

$$4nx = \frac{l}{2}(4n - 4n\cos \theta + 1 - \cos^2 \theta).$$

Dividing both sides by $\frac{l}{2}$ and transposing,

$$\cos^2\theta + 4n\cos\theta = 4n + 1 - 8n\frac{x}{l}.$$

Completing the square,

$$\cos^2\theta + 4n\cos\theta + 4n^2 = 4n^2 + 4n + 1 - 8n\frac{x}{l}.$$

Extracting roots,

$$\cos\theta + 2n = \sqrt{4n^2 + 4n + 1 - 8n\frac{x}{l}},$$

and, transposing,

$$\cos\theta = \sqrt{4n^2 + 4n + 1 - 8n\frac{x}{l}} - 2n \qquad (47)$$

This equation enables us to determine directly the crank angle θ corresponding to any piston position. We then determine from a table of sines and cosines the value of the sine of θ, which we divide by $2n$ (equation 18A.) This gives us the sine of the connecting rod angle ϕ. Then, from a table of sines, we find the corresponding angle, and finally from a table of tangents, the tangent of this angle. The results of the various steps are given in the following table (for $n = 2$):

Point of stroke	0.1	0.2	0.4	0.6	0.8
Cos θ	0.837	0.669	0.313	—0.076	—0.507
Sin θ	0.547	0.743	0.950	0.997	0.862
Sin ϕ	0.137	0.186	0.237	0.249	0.215
ϕ	7° 52′	10° 43′	13° 43′	14° 25′	12° 25′
Tan ϕ	0.138	0.189	0.244	0.257	0.220

Multiplying the values of P_p by those of tan ϕ, we get the following values for the piston pressure on the cylinder wall for different points of the stroke (in pounds per square inch of piston head area):

Point of stroke	0.1	0.2	0.4	0.6	0.8
Pressure of cylinder wall	13.4	16.2	21.2	25.9	25.2

In a similar manner we can determine the side pressures on the piston wall during the other strokes.

The values here given are the side thrusts per square inch of piston head area. To get the total side thrust we multiply by the piston head area in square inches.

Fig. 83 shows the total side thrust on the cylinder wall of a 3½ x 5-inch motor, having reciprocating parts weighing 4.33 lbs., compression and expansion curves like those shown in Fig. 15, and running at 1,800 r.p.m. It will be noted that the side thrust changes direction at the beginning and near the middle of each stroke, except the power stroke. The average value of the total side thrust in this motor under

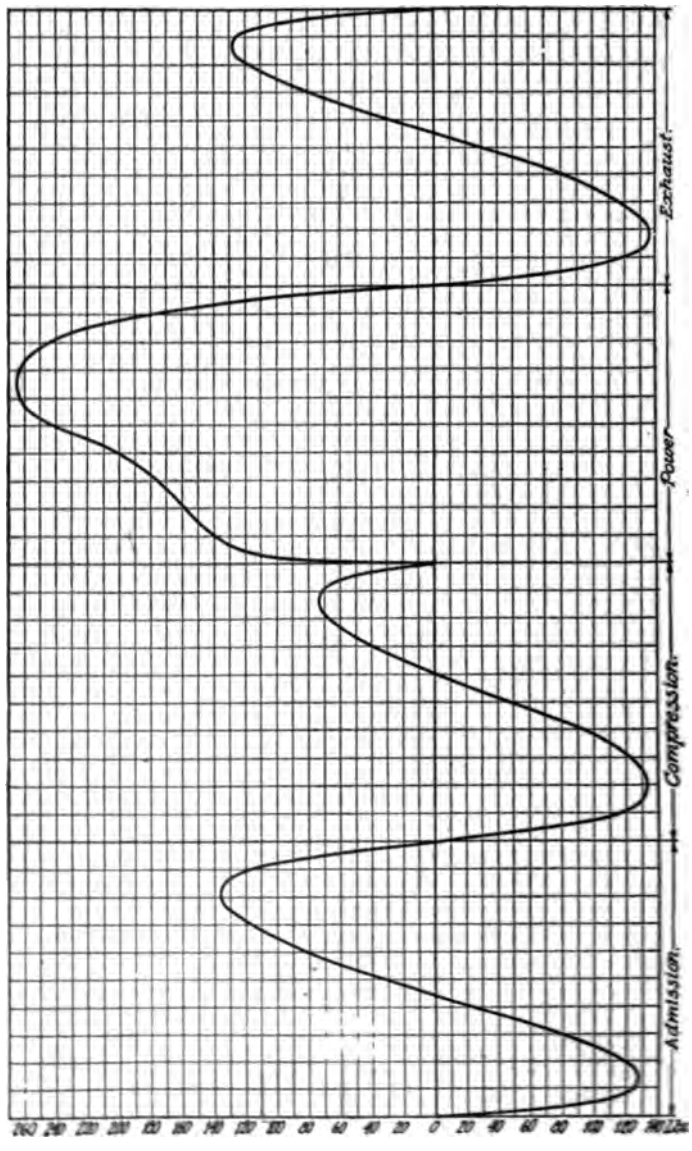

FIG. 83.—SIDE THRUST ON CYLINDER WALL OF 3½ x 5 INCH ENGINE AT 1800 R.P.M.

the conditions stated is about 110 lbs. Now, the wear on the piston and cylinder wall is proportional to the average side thrust per square inch of bearing surface, consequently the effective bearing surface should be made proportional to the total average side thrust. For the average side thrust per square inch of bearing surface throughout the four strokes we may take 12 lbs. Hence in the 3½ x 5-inch engine we should need pistons with an effective bearing length of

$$\frac{110}{12 \times 3.5} = 2.62 \ (2\tfrac{5}{8}) \ \textit{inches.}$$

While the method above described seems to be most logical to determine the piston length, as it makes the effective bearing area proportional to the average bearing pressure at full engine load, in practice a short cut is generally employed by making the total piston length proportional to the diameter. In the majority of engines the length

$$l_p = 1.2\ b - 1.3\ b.$$

In the case of the 3½ x 5-inch piston, if we figure on four piston rings each 3/16 inch wide, the length occupied by the rings will be ¾ inch.

It is customary to undercut the piston for a certain length on each side of the piston pin axis, the chief reason for this being the fact that the flexure of the piston pin when under load is likely to deform the piston surface in the vicinity of the piston bosses, so that it will not bear evenly. The length of this under-cut portion may be made equal to 0.3 b. In the present case this length would be 1⅛ inches. The total length of the piston would therefore be

$$2\tfrac{5}{8}+1\tfrac{1}{8}+\tfrac{3}{4}=4.5$$

The mean bearing pressure of 12 pounds per square inch is a good average figure. This pressure can be varied somewhat according to the purpose for which the motor is to be used. For a light motor for a speedster, etc., a greater pressure can be allowed, while for a truck motor a

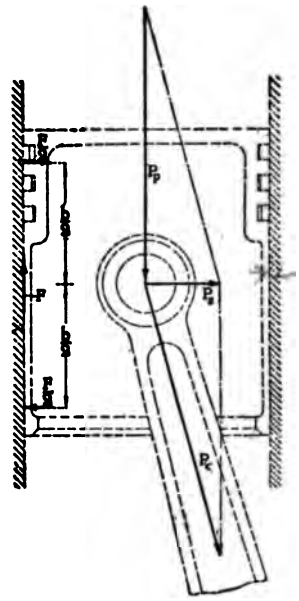

FIG. 84.—FORCES ON PISTON IN MOTION.

lower pressure will be advisable on account of the increased life of the piston and cylinder which it insures.

Effect of Piston Friction—When the piston is at rest it is held in equilibrium by three forces, viz., the gas pressure P_p on the piston head, the connecting rod thrust P_c and the reaction of the cylinder wall P_s against the piston (Fig. 84). When, however, the piston is moving another force comes into play, namely, the frictional force F at the contact surface between the piston and cylinder. This force is equal to the product of the side pressure P_s on the cylinder wall by the friction coefficient p. The latter may be taken at 0.05. The direction of the force F is opposite to the direction of motion. The force F does not add to or subtract from the mean pressure against the cylinder wall, but it affects the distribution of that pressure. It has a tendency to turn the piston around the piston pin axis, the turning moment being $F \times b/2$. This turning moment is equal to a couple produced by two forces $F/2$ acting on the piston perpendicularly to the direction of the force F, at distances $\frac{b}{2}$ from the piston pin axis.

Distribution of Side Thrust—The component of the connecting rod reaction which results in side pressure on the cylinder wall, passes through the piston pin axis perpendicular to the axis of the cylinder, and is, therefore, a concentrated force. The reaction of the cylinder wall on the piston, on the other hand, is distributed over the entire bearing surface of the piston. If the piston had a bearing surface over its entire length and the piston pin were exactly at the middle of its length, then the reaction would be evenly distributed over the entire bearing surface. But if the piston pin axis were, under these conditions, nearer the head end of the piston, for instance, then the reaction would be greater at the head end than at the open end of the piston. The specific pressures at the two ends under these conditions

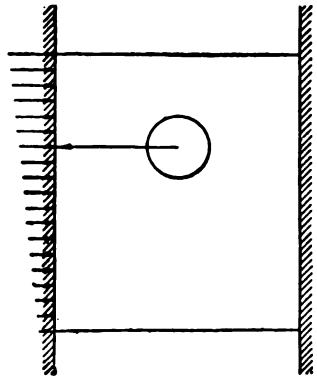

FIG. 85.—DISTRIBUTION OF SURFACE PRESSURE WITH UNSYMMETRICAL LOAD.

would be inversely proportional to their distances from the piston pin axis, and the pressure would decrease uniformly from the head end to the open end. This effect is illustrated in Fig. 85. The grooves disturb the distribution of the pressure somewhat, and their presence must be taken into account.

Best Location of Pin—What we want is a uniform distribution of pressure over the entire bearing length of the piston. It has already been pointed out that by moving the piston pin farther toward one end of the piston the pressure at that end is increased. If there were no ring grooves the pressure would be equally distributed when the piston is at rest, if the piston pin were exactly in the middle of the piston. The presence of the grooves would lead us to move the pin down from the centre, while the couple due to the frictional force when the piston makes the power stroke would lead us to move it upward, in order to neutralize the effect of the couple. Where, then, is the best position for the pin?

Let us assume that the piston in regular operation presses against the cylinder wall with a uniform pressure a per inch of length—the result we desire to attain. Let us call the length

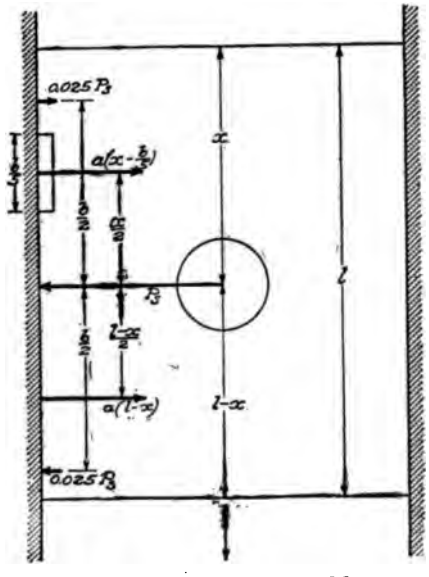

FIG. 86.—DIAGRAM OF PISTON MOMENTS.

of the piston l, and let the piston pin axis be at a distance x from the head end. The total pressure of the piston against the cylinder wall is then

$$P_s = a\left(l - \frac{b}{5}\right).$$

$\frac{b}{5}$ being the length occupied by the rings. We will assume that the rings are evenly distributed between the head end of the piston and the piston pin axis, which is generally very nearly the case.

Taking moments around the piston pin axis (Fig. 86),

$$a\left(x - \frac{b}{5}\right)\left(\frac{x}{2}\right) + 0.025\,a\left(l - \frac{b}{5}\right)\left(\frac{b}{2}\right)$$
$$= a(l - x)\left(\frac{l - x}{2}\right) - 0.025\,a\left(l - \frac{b}{5}\right)\left(\frac{b}{2}\right).$$

Simplifying and transposing,

$$\frac{a}{2}\left(x^2 - \frac{b\,x}{5}\right) + 0.05\,\frac{a}{2}\left(b\,l - \frac{b^2}{5}\right) = \frac{a}{2}\,(l^2 + x^2 - 2\,l\,x).$$

Dividing by $\frac{a}{2}$ and multiplying by 5,

$$5\,x^2 - b\,x + 0.25\,b\,l - 0.05\,b^2 = 5\,l^2 + 5\,x^2 - 10\,l\,x.$$

Transposing,

$$10\,l\,x - b\,x = 5\,l^2 + 0.05\,b^2 - 0.25\,b\,l,$$

and

$$x = \frac{5\,l^2 + 0.05\,b^2 - 0.25\,b\,l}{10\,l - b} \quad \ldots\ldots\ldots\ldots\ldots\ldots \quad (50)$$

In the example of a 3.5x5 inch engine, which we considered a little further back, we found that the piston had to be 4.5 inches long. Substituting the values

$$b = 3.5 \qquad l = 4.5$$

in equation (50) we get

$$x = \frac{(5 \times 4.5 \times 4.5) + (0.05 \times 3.5 \times 3.5) - (0.25 \times 3.5 \times 4.5)}{(10 \times 4.5) - 3.5}$$
$$= 2.36\ (2\tfrac{3}{8})\ \text{inches.}$$

That is the piston pin axis should be $2\frac{3}{8}$ inches from the head end.

Thickness of Piston Walls—It is a very common practice to connect the piston head and piston bosses by a rib of substantially the form shown in Fig. 87. This rib considerably strengthens the cylinder head and permits it to be made thinner

than if no rib were provided. It also relieves the side wall of the piston of some strain and permits of this wall being made thinner. Pistons of very small diameter are occasionally made without this rib, while pistons of large size sometimes have four or six equally spaced ribs joining the head to the side wall of the piston.

The head can also be strengthened by making it convex or bulging outwardly, and this form of head is frequently met with, a second reason for its use being that when a high compression ratio is desired it helps to reduce the compression volume. It is, however, a better plan to make the head plane, as in that case its surface in contact with the hot gases is a minimum, and the piston will then absorb less heat. Since it is not provided with any cooling means this is a matter of considerable moment.

In developing formulæ for the thickness of the different parts of the piston wall, it must be borne in mind that all of these walls are machined on one side only, and some allowance must be made for inaccurate core work. That is to say, the formulæ for the thicknesses should be of the form

$$t = a\,b + c,$$

where t is the thickness of the wall, b the bore and a and c are constants, c being allowance for inaccuracies in the casting. In pistons of the type represented in Fig. 87, the head thickness may be made

$$t_h = 0.032\,b + 0.060\ \textit{inch} \qquad (51)$$

If eccentric rings are used the maximum thickness of the ring is

$$\frac{b}{27.5} = 0.0364\,b,$$

and the depth of the groove must be made about 10 per cent. greater, viz.,

$$d_g = 0.04\,b \qquad (52)$$

The thickness of the piston wall where the ring grooves are located can be determined by the equation

$$t_u = 0.062\,b + 0.10\ \textit{inch} \qquad (53)$$

and the thickness at the lower end by the equation

$$t_l = 0.02\,b + 0.05\ \textit{inch} \qquad (54)$$

The whole matter of piston dimensions is at present in a state of development, but the above rules are suitable for pistons for moderate speed engines.

Allowance for Heat Expansion—The average American practice in regard to piston clearance allowance is to allow 2 thousandths of an inch per inch of cylinder bore at the head

end of the piston, and ½ thousandth at the bottom end, the piston being tapered from the head end toward the bottom end. The piston diameter at the head end, therefore, should be

$d_h = 0.998\ b$ ..... (55)

and the piston diameter at the bottom end,

$d_b = 0.9995\ b$ ..... (56)

Some makers reduce only the uppermost land and make the remainder of the piston cylindrical.

Number and Location of Rings.—Practice is about evenly divided between the use of three and of four rings. If a light, compact motor is desired, it will be advisable to limit the number of rings to three, while if lightness is not such an important consideration, it will be better to use four. Generally, all of the rings are placed on that part of the piston above the piston pin, but occasionally a ring is placed near the lower or open end. This is an inheritance from stationary gas engine practice. It is sometimes claimed that the object of this ring is to aid in the distribution of the oil, but the original purpose for which the ring was placed at the lower end was to have it over-travel the bottom end of the cylinder bore, and thus prevent the forming of a ridge where the travel of the lowest ring ends. It is usual to cut two or three circular grooves in the outer surfaces of the piston near the lower end for the distribution of the oil.

Sample Design—Having thus derived formulæ for all the principal piston dimensions, we are now in position to design a piston for our 3.5x5 inch motor. The required length has already been determined to be 4.5 inches, and the best location of the piston pin axis as 2.36 (2⅜) inches from the head end. The diameter of the piston at the head end will be

$$3.5 \times 0.998 = 3.493 \textit{ inches},$$

and the diameter at the bottom end—

$$3.5 \times 0.9995 = 3.498 \textit{ inches}.$$

The thickness of the head—

$$3.5 \times 0.032 + 0.060 = 0.182\ (3/16) \textit{ inch}.$$

The depth of the ring grooves—

$$3.5 \times 0.04 = 0.140\ (9/64) \textit{ inch}.$$

The thickness of the piston wall at the upper end—

$$3.5 \times 0.062 + 0.10 = 0.317\ (5/16) \textit{ inch},$$

and the thickness of the piston wall at the lower end—

$$3.5 \times 0.02 + 0.05 = 0.12\ (⅛) \textit{ inch}.$$

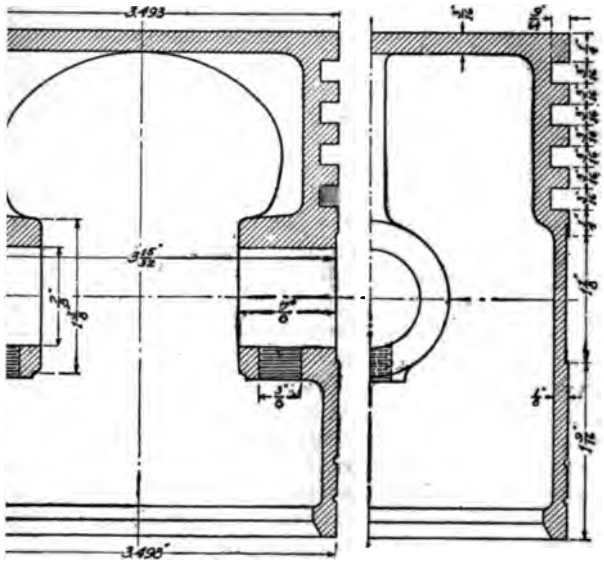

FIG. 87.—TYPICAL CAST IRON PISTON.

ıecessary diameter of the piston pin has already been › be ⅞ inch, that of the piston bosses 1⅜ inches, and :h of the piston bosses, ⅞ inch. The length of the under- ion of the piston, which is symmetrical with the piston , will be

$$3.5 \times 0.3 = 1.05 \text{ (say } 1\tfrac{1}{8} \textit{ inches})$$

lercut may be made 1/64 of an inch; that is, the piston ›ortion may be reduced to 3 15/32 inches in diameter. th of the piston rings is

$$3.5 \div 20 = 0.175.$$

e found that four rings can be placed on the top end of ›n and each of the "lands" between rings made 3/16 inch

the wall of the piston at the lower end is usually made n, it is a good plan to provide the casting with an in- ange at the lower e ıd to make it more rigid, which ally desirable for machining.

ıl Piston Designs.—Except for the fact that some en- ıkers use, in addition to the cutsomary three piston the top end of the piston, a scraper ring at the bot-

tom end and possibly a guide ring over the ends of the piston pin, there has been in the past a remarkable uniformity in piston design. A few special designs have been evolved, however, among the objects sought being reduced weight, protection of the skirt against heat from the piston head and protection of the cylindrical wall of the piston from distortion due to the strains on the piston bosses.

In Fig. 88 is shown the Zephyr pressed steel piston, made by James, Talbot & Davison, of Lowestoft, England. It is made in two parts of pressed steel, riveted together at the head. One of its advantages is that the load on the piston head and the piston bosses is more uniformly distributed than in the usual design, which alone permits of lightening these parts. The piston pin also is considerably lighter, being not only shorter but also smaller in diameter, as the distance between the reaction points is less. Owing to the holes in the lower part of the piston the air can circulate freely to the part carrying the ring. There is only one ring groove, but of course, two or more narrow rings may be inserted in this.

Of somewhat similar form as the Zephyr but considerably different in details is the crosshead piston, shown in Fig. 89, which is made by the Herschell-Spillman Company, North Tonawanda, N. Y. This is a cast iron piston and not designed for lightness, but rather to render the skirt immune to the heat of the piston head, and to the mechanical stresses due to the reaction between piston bosses and piston pin. A good point of this crosshead piston is that almost the whole length of the skirt is available for bearing purposes. It is claimed that a 4-inch piston of this design works satisfac-

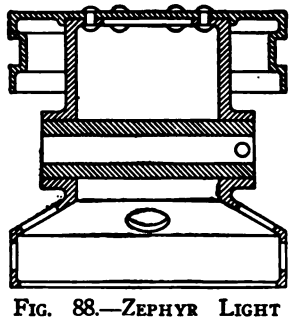

FIG. 88.—ZEPHYR LIGHT PRESSED STEEL PISTON.

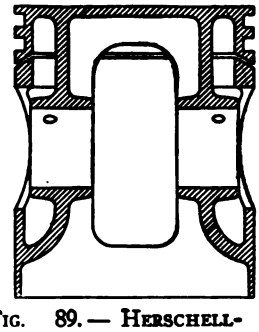

FIG. 89.— HERSCHELL-SPILLMAN CROSSHEAD TYPE PISTON.

torily with only 0.001-inch clearance, while a clearance of 0.035-inch produces no slap, hence there is a wider per missible range in working limits.

Aluminum Pistons.—High speed engines are often fitted with pistons cast of aluminum alloy to reduce the weight of the reciprocating parts, and consequently the inertia forces acting on them. There are several such alloys on the market, known under different trade names, but most of them are alloys of aluminum and magnesium, originally known as magnalium. These alloys have bearing properties and are lighter than pure aluminum, the specific gravity of the original magnalium alloy being 2.5. Since the specific gravity of cast iron is about 7.25 an aluminum alloy piston weighs only a little more than one-third as much as an iron piston. In physical properties these aluminum alloys differ materially from cast iron, a fact which must be taken into account in designing pistons to be cast in them. Their fusing points (1,100-1,200 degrees F.) are very much lower, consequently care must be taken that the temperature of the piston head will not become too high, for at temperatures approaching the melting point the alloys lose a great deal of their strength. In racing engines fitted with aluminum alloy pistons it has happened that the piston heads have been pushed through right into the piston as a result of attaining a very high temperature while operating under full load. Aluminum has a coefficient of heat expansion (0.00001234) substantially twice that of cast iron, and this has been the cause of the greatest difficulties which have been encountered with alloy pistons. Obviously, in order to prevent seizing of the pistons when the engine runs continuously under heavy load, a greater clearance must be allowed between piston and cylinder wall. Fortunately the thermal conductivity of aluminum is much greater than that of cast iron, hence the heat absorbed by the piston head is transferred to the skirt much more rapidly and danger of overheating of the head is thereby reduced. If too much clearance is allowed the piston is apt to develop side slap while cold.

Clearance Allowance in Aluminum Pistons.—The pistons can, of course, be turned either cylindrical or tapering. The usual clearance for cylindrically turned aluminum alloy pistons is 0.002 inch per inch bore on the skirt, 0.010 inch more on the top land and proportionate amounts more on the intermediate lands. It is generally conceded that in view of the great importance of having the clearance just right, that is,

no greater than absolutely required to prevent seizing of the pistons under load at high speed, the clearance problem must be solved experimentally for each engine and piston design, and in this the above figures will serve for a start. That no hard and fast rule can be laid down for clearances is proven by the experimentally established fact that the required clearance is different with a convex or concave head than with a plane head, different when ribs are used than in the opposite case.

In order to facilitate the transfer of heat from the head to the skirt, alloy pistons, and especially those of larger diameters, are often designed with an internal rib at right angles to the piston bosses, in addition to the rib joining these bosses. Besides increasing the area of heat conducting material between head and skirt this reduces the stress in the head. It is also a good plan to make the head slightly thicker (1/32-1/16 inch) than in a corresponding iron piston.

Oil Pumping.—Owing to the greater clearance necessary with aluminum pistons some trouble has been experienced from "oil pumping," i.e., suction of oil into the combustion chamber, when the engine runs on small throttle, under which condition the piston runs comparatively cool and is not fully expanded. To prevent such oil pumping the piston should have a groove cut around its circumference just below the bottom ring, at the bottom of which groove is drilled a number of equally spaced holes (about 3/32 inch) through the cylinder wall. The lower piston ring then acts as a scraping ring, the oil collecting in the groove below it and flowing through the drill holes back into the crank case. An incidental advantage of aluminum pistons is that carbon deposits do not form on them as readily as on cast iron pistons.

Metal Mold Castings.—Aluminum pistons may be cast either in sand or in metal molds. The latter process, known as the Cothias, is exploited by the Aluminum Castings Co. of Cleveland. Formerly it was impossible to have a bottom flange in a piston made by this process, as to operate the mold the internal diameter had to increase from the top end down, but this limitation has now been overcome. Sometimes a flange is wanted near the lower end for an oil scraper ring. The process permits of casting the pistons very close to size and reduces the amount of machine work required and the waste of material in shavings. It is also claimed to materially increase the hardness of the alloy, thus improving the wearing properties.

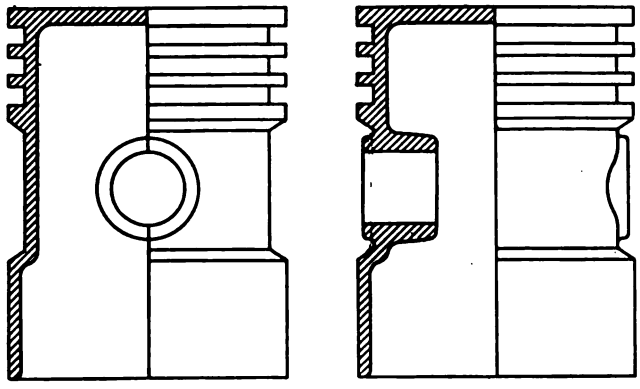

FIG. 90.—HOURGLASS TYPE PISTON.

Preventing Piston Slap.—To obviate, or at least minimize, piston slap when starting, it is well to make the piston comparatively long, and a length 1.3 times the diameter is recommended. Also, on account of the considerable undersize of the piston lands, and the fact that their extra clearance is not fully taken up except when running under full load, it is well not to count on the lands as bearing surface when determining the best location for the piston pin. Making the piston long will also reduce its wear. In this connection it should be pointed out that since magnalium is considerably softer than gray iron, the wear on the cylinder wall will be reduced when alloy pistons are used.

The hour glass type is a special design of piston which has come into use concurrently with aluminum alloys for this purpose. It is illustrated in Fig. 90. This design, it would appear, fits in well with the metal mold process of casting, as it permits of placing a scraper ring near the lower end of the piston. It gives the same result as undercutting or "waisting" the piston in the lathe over that portion of its length covered by the piston bosses, and any distortion due to driving the wrist pin in place cannot affect the bearing surface. Of course, with this hour glass design the effective bearing surface of the piston is reduced. This is avoided in a design (Fig. 91) due to the Northway Motor Mfg. Co., in which the cylindrical surface of the piston is depressed only a short distance to both sides of the piston boss and not all around the circumference.

In machining aluminum pistons a mixture of kerosene or gasoline with 10 per cent. lubricating oil is used as a lubricant.

Manufacture of Pistons—Since the walls of the piston castings are very thin, they are often hard in spots, and for this reason the castings are first annealed. They are filled with charcoal and brought to a good red heat in an annealing furnace,

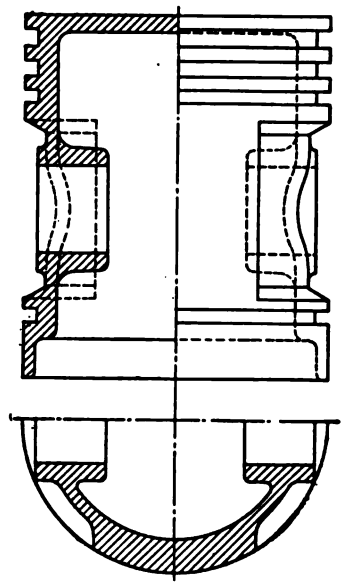

FIG. 91.—MODIFIED HOURGLASS TYPE OF PISTON (NORTHWAY).

and are then allowed to cool slowly on a bed of ground bone so that the heads of the pistons will not chill. After annealing the castings are sand blasted to remove the core sand, and if it is thought desirable to clean them still further, they may be placed in a tank of kerosene.

The first machining operations on a piston of the type illustrated in Fig. 87 consist in centre drilling and reaming the little boss generally provided on the head, and boring out the internal flange or rib at the open end. The latter operation can be accomplished to advantage by means of a boring tool and floating reamer in a turret lathe.

The next operations consist of turning the piston on the outside, facing the head and cutting the ring grooves. These operations are preferably performed at one setting in a turret lathe specially adapted for the work. A face plate for holding and driving the piston and the necessary tools for finishing it, are illustrated in Fig. 92. The piston is secured to the face plate *A* by means of the draw-in rod *B*, with a Tee head which engages over the piston bosses. It is centred and held square to the face plate by the finished internal flange at its open end. The

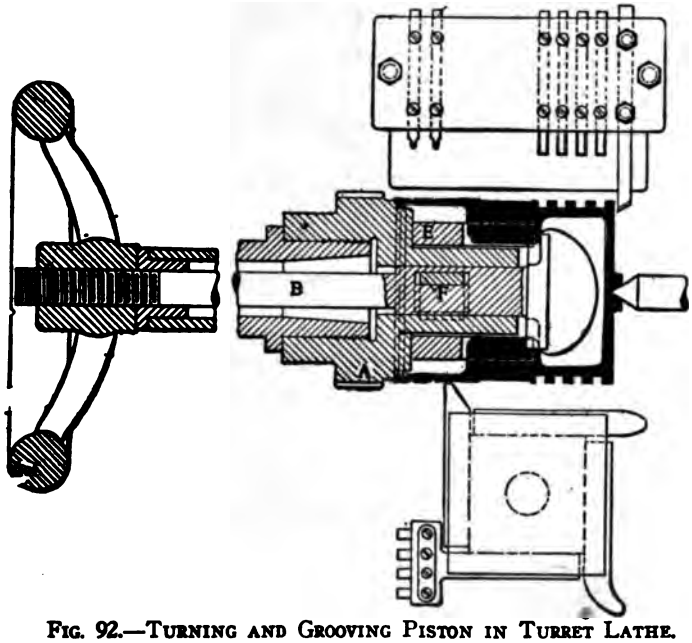

FIG. 92.—TURNING AND GROOVING PISTON IN TURRET LATHE.

casting is driven by means of a semi-floating driver *E* attached to the face plate *A*. This driver bears uniformly on the two bosses and floats on the flat key *F* at right angles to the driving faces. The casting is further steadied by means of the tail centre. The turret head on the cross slide contains the tools for rough turning, rough facing, rough grooving and under cutting, which are brought into operation in the order given. Finish facing, finish grooving and cutting of oil grooves are accom-

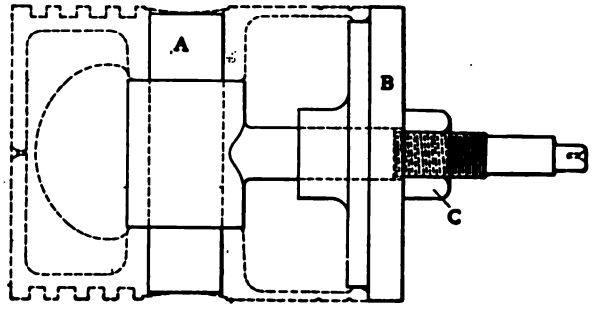

FIG. 93.—ARBOR FOR GRINDING PISTON.

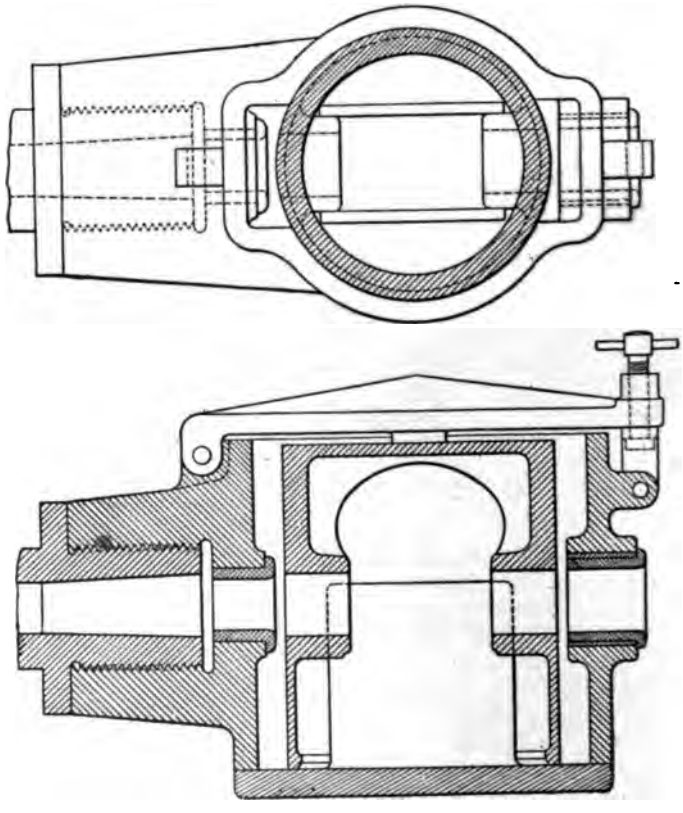

FIG. 94.—PISTON BOSS DRILLING JIG.

plished simultaneously by means of a set of tools carried on the back end of the carriage. These turret lathes are provided with star wheel stops and with spring actuated ball locating pawls on the head stock, which makes longitudinal measurements unnecessary. If the piston is of such design that the rib prevents the T head of the draw-in rod from engaging securely over the piston bosses, the bosses may first be drilled and a slip pin used instead of the T head.

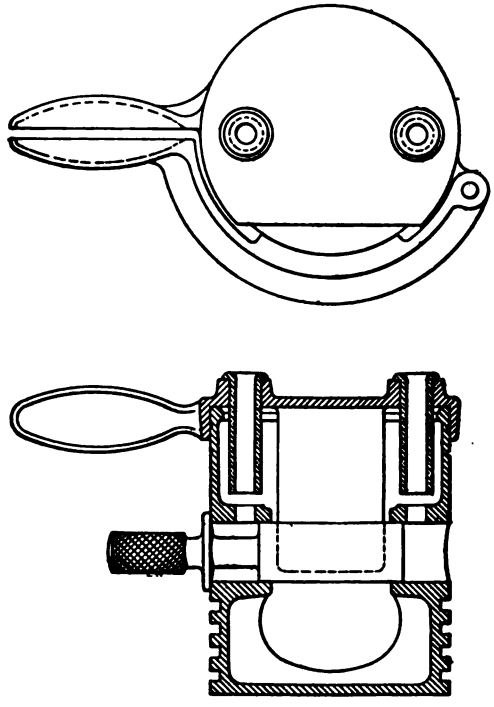

FIG. 95.—JIG FOR DRILLING LOCK SCREW HOLE.

If the piston is to be ground on the outside, no finishing cut is necessary, but an allowance for grinding of from 0.020 to 0.030 is made in the diameter. An arbor suitable for holding the piston for grinding is illustrated in Fig. 93. The grinding is done after the piston bosses have been drilled and reamed, and the sliding rod *A* is passed through the holes in the

piston bosses, while the sliding collar B is drawn up against the finished open end of the piston by means of the nut C. The piston being centre drilled and reamed at the head end, when it is secured on the arbor, the assembly can be supported in the grinding machine between centres.

For drilling and reaming the holes in the piston bosses a drilling fixture is made use of, which can be secured to a lathe face plate or screwed to the head stock. A well designed jig for this purpose, which was described by Robert G. Pilkington in THE HORSELESS AGE of October 21, 1908, is illustrated in Fig. 94. This jig is adapted to be screwed to the head stock of a turret lathe. It consists essentially of a cylindrical casting into which the piston casting fits, grooves being left on opposite sides for the escape of the chips. One head of the jig is permanently fastened in place and is provided with lugs which straddle the piston bosses so as to centre them with the tool. The other head is in the form of a hinged yoke which can be swung aside to introduce the piston into the fixture and is held in place by means of a swinging stirrup and clamp screw.

On the entering side of the jig slip bushings are used, of the proper size for the drill and reamer, respectively. The drill is guided only by the bushing on the entering side, while the reamer is guided at both ends.

In drilling the holes for the piston pin lock screw the jig shown in Fig. 95, also due to Pilkington, can be used to advantage. This jig is made in two parts, a body and a clamp, which form handles convenient to grasp in one hand while the other feeds the drill. When so held the jig is firmly clamped to the piston and will not be pulled off when the drill is raised out of the bushing. A hardened steel guide pin is placed in the piston pin hole, so as to centre the bushings with the hole by means of machined surfaces straddling the guide pin.

CHAPTER VIII.

OFFSET CYLINDERS.

Object of Offsetting—The side thrust of the piston against the cylinder wall is the cause of both wear of the piston and cylinder and of frictional loss, and any means of reducing it is therefore doubly advantageous. It was shown in a previous chapter that this side thrust is proportional to the effective pressure on the piston and to the tangent of the connecting rod angle. The effective pressure on the piston cannot well be reduced, as upon it depends the power developed by the motor, so the only chance lies in reducing the value of tangent ϕ (that is, of the angle ϕ itself). The most obvious way of accomplishing this is by making the connecting rod longer. Old text books on the steam engine dwell at considerable length on the ideal engine with a connecting rod of infinite length, in which, among other things, there is no side thrust on the cylinder wall. In practice, however, the length of the connecting rod is limited, since the height of the motor, and consequently its bulk and weight, increase rapidly with this length. There is, however, a method of arranging the moving parts so that with a fixed length of connecting rod the connecting rod angle will be relatively small when the pressure on the piston is high, and proportionately greater when the pressure on the piston is low. This consists in offsetting the cylinder axis from the vertical plane through the crank shaft axis toward the side on which the crank arm móves during the power stroke. The angularity of the connecting rod for any position on the power stroke, except at the very ends of the stroke, is then less than it is for the corresponding position in a motor without offset cylinders—a symmetrical motor.

Offsetting of the cylinders (or of the crank shaft) has some rather peculiar effects on the functions of the motor. In the first place, the piston is not at the ends of its stroke when the crank arm is in the vertical positions; it reaches the ends of the

stroke a moment later, when the crank arm and connecting rod are in line with each other. Besides, the two dead centre positions are not 180 degrees apart, as they are in a symmetrical motor, but slightly less, as clearly shown in Fig. 96. The effective or actual length of the stroke, instead of being equal to twice the length of the crank arm, is slightly greater than this. The connecting rod is parallel with the cylinder axis

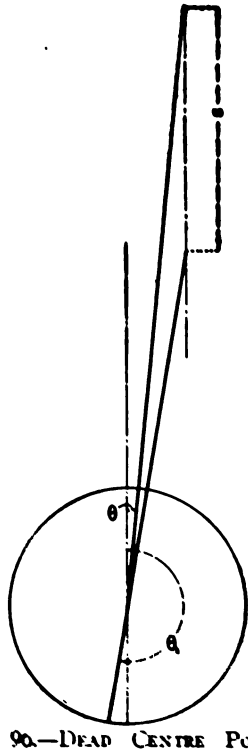

FIG. 96.—DEAD CENTRE POSITIONS IN OFFSET CYLINDER MOTOR.

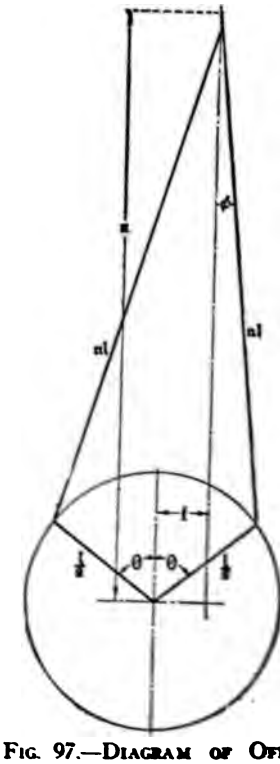

FIG. 97.—DIAGRAM OF OFFSET CYLINDER.

some time after the top vertical position of the crank has been passed and the same time before the bottom vertical position is reached. The two points for which the connecting rod angle becomes zero both fall in the downward stroke. The piston is not at the same distance from the top end, say, of the stroke, when the crank arm is at the same angular distance from its

upper vertical position on opposite sides of the centre, respectively, as in the case in the symmetrical motor.

Length of Stroke and Dead Centre Positions—Referring to Fig. 96, when the crank and connecting rod are in the upper dead centre position, the sine of the crank angle

$$\sin\theta = \frac{f}{\frac{l}{2} + n\,l} = \frac{f}{l\,(n + \frac{1}{2})} \quad \ldots\ldots\ldots\ldots\ldots\ldots\ldots\ldots (57)$$

and when the piston is in the bottom dead centre position

$$\sin\theta_1 = -\frac{f}{n\,l - \frac{l}{2}} = -\frac{f}{l\,(n - \frac{1}{2})} \quad \ldots\ldots\ldots\ldots\ldots\ldots\ldots\ldots (58)$$

In our particular example, with an offset of $\frac{b}{4} = 1$ *inch.*

$$\sin\theta = \frac{1}{5 \times 2.5} = 0.08,$$

and

$$\theta = 4^\circ\,35';$$

also

$$\sin\theta_1 = -\frac{1}{5 \times 1.5} = -0.133$$

and

$$\theta_1 = 187^\circ\,40'.$$

If we assume that the crank motion is uniform, which is very nearly the case, it follows that the mean piston speed is slightly less during the down stroke than during the up stroke, since the crank travels through a greater angular distance during the down stroke than during the up stroke.

Referring to Fig. 96, it can easily be seen that the actual length of stroke is

$$S = \sqrt{\left(n\,l + \frac{l}{2}\right)^2 - f^2} - \sqrt{\left(n\,l - \frac{l}{2}\right)^2 - f^2} =$$

$$\sqrt{l^2\,(n + \tfrac{1}{2})^2 - f^2} - \sqrt{l^2\,(n - \tfrac{1}{2})^2 - f^2} \quad \ldots\ldots\ldots\ldots\ldots\ldots (59)$$

For a motor of 5 inch nominal stroke with 10 inch connecting rod and 1 inch offset this gives

$$s = 5.027 \text{ inches},$$

while for the same motor with an offset of 0.666 inch (one-sixth the bore) it gives

$$s = 5.012 \text{ inches}$$

The main object of offsetting the cylinder being a reduction in the side thrust of the piston against the cylinder wall, we will investigate the variation of this side thrust in an offset cylinder

motor during the power stroke and compression stroke, respectively. We will also investigate the effect of offsetting on the timing of the motor and on the balance of the reciprocating parts. To this end it is necessary to develop equations for the piston position, piston speed and piston acceleration corresponding to any crank angle, the same as was done for the symmetrical motor.

Piston Speed and Acceleration—Referring to Fig. 97, let f represent the amount of the offset. Let the length of the connecting rod be denoted by $l\,n$ and the length of the crank arm by $\frac{l}{2}$, (though it should be pointed out that in this case l stands for the nominal length of stroke and not the actual). The use of the same symbols as in the previous discussion has the advantage that the equations developed should reduce to the corresponding equations for the symmetrical motor if f is made 0, which will be a check on the accuracy of the work. The crank and connecting rod angles are again represented by θ and ϕ, respectively. As regards the momentary piston position, it is more convenient in this case to represent this by the vertical distance between the piston pin axis and the crank shaft axis, rather than by the distance between the momentary position of the piston pin axis and its highest position.

Let x represent the vertical distance between the piston pin axis and the crank shaft axis. Then (Fig. 97),

$$x = n\,l \cos\phi + \frac{l}{2}\cos\theta,$$

and

$$n\,l \sin\phi + f = \frac{l}{2}\sin\theta.$$

This latter relation holds for any point of the crank circle.

It follows that

$$\sin\phi = \frac{\frac{l}{2}\sin\theta - f}{n\,l} = \frac{\sin\theta}{2\,n} - \frac{f}{n\,l} \quad \text{.....(60)}$$

$$\text{But } \cos\phi = \sqrt{1 - \sin^2\phi} = \sqrt{1 - \left(\frac{\sin\theta}{2\,n} - \frac{f}{n\,l}\right)^2}.$$

Hence,

$$x = n\,l\sqrt{1 - \left(\frac{\sin\theta}{2\,n} - \frac{f}{n\,l}\right)^2} + \frac{l}{2}\cos\theta \quad \text{.....(61)}$$

In order to get rid of the radical expression we add to it

$$\frac{1}{4}\left(\frac{\sin\theta}{2n}-\frac{f}{nl}\right)^4,$$

which makes it a perfect square and does not introduce an appreciable error. Extracting the root, we get

$$x=nl-\frac{nl}{2}\left(\frac{\sin\theta}{2n}-\frac{f}{nl}\right)^2+\frac{l}{2}\cos\theta \quad\ldots\ldots\ldots\ldots\ldots\ldots\ldots(62)$$

If now we differentiate this expression with respect to time we get the momentary piston speed

$$v=\frac{dx}{dt}=\left[-nl\left(\frac{\sin\theta}{2n}-\frac{f}{nl}\right)\frac{\cos\theta}{2n}-\frac{l}{2}\sin\theta\right]\frac{d\theta}{dt}.$$

But $$\frac{d\theta}{dt}=\frac{\pi N}{30}\ \textit{radians per second},$$

hence,

$$v=-\frac{\pi N}{30}\left(\frac{l}{4n}\sin\theta\cos\theta-\frac{f}{2n}\cos\theta+\frac{l}{2}\sin\theta\right).$$

Dividing by 12 to reduce to feet per second, and multiplying the expression in parentheses by 2, and dividing the coefficient of this expression by the same number,

$$v=-\frac{\pi N}{720}\left(\frac{l}{2n}\sin\theta\cos\theta-\frac{f}{n}\cos\theta+l\sin\theta\right)\ \textit{feet per second}\ldots(63)$$

When $f=0$ this equation becomes identical with equation (21), giving the momentary piston speed for a symmetrical motor.

In order to find the piston acceleration we differentiate equation (63), which gives

$$dv=-\frac{\pi N}{720}\left[\frac{l}{2n}(\cos^2\theta-\sin^2\theta)+\frac{f}{n}\sin\theta+l\cos\theta\right]d\theta,$$

and remembering that

$$\frac{d\theta}{dt}=\frac{\pi N}{30},$$

and that

$$\cos^2\theta-\sin^2\theta=\cos 2\theta,$$

we get

$$a=\frac{dv}{dt}=-\frac{\pi^2N^2}{21{,}600}\left(\frac{l}{2n}\cos 2\theta+\frac{f}{n}\sin\theta+l\cos\theta\right)=$$

$$-\frac{\pi^2N^2l}{21{,}600}\left(\frac{1}{2n}\cos 2\theta+\frac{f}{nl}\sin\theta+\cos\theta\right).\quad\ldots\ldots\ldots\ldots\ldots\ldots(64)$$

This equation becomes identical with equation (23) (which gives the piston acceleration for a symmetrical motor) when the offset f is zero, except that it is preceded by the minus sign, which is due to the fact that in this case we are considering the motion of the piston pin axis relative to the crank shaft axis, which is opposite to the motion of the piston pin relative to its highest position, which we considered in the former case.

If W represents the weight of the reciprocating parts, then the inertia force in the offset motor may be represented by the equation

$$F_a = 0.0000142\, W l N^2 \left(\frac{1}{2\,n} \cos 2\,\theta + \frac{f}{n\,l} \sin \theta + \cos \theta\right) \ldots\ldots\ldots (65)$$

Side Thrust on Cylinder Wall—The length of the offset employed in practice lies generally within the limits of one-quarter the bore and one-sixth the bore. American practice rather favors an offset of one-sixth, while European practice favors an offset of one-fourth. In determining the side thrust for different points of the up stroke and the down stroke we must first determine the crank angle corresponding to different points on both strokes. The deduction of an equation giving this

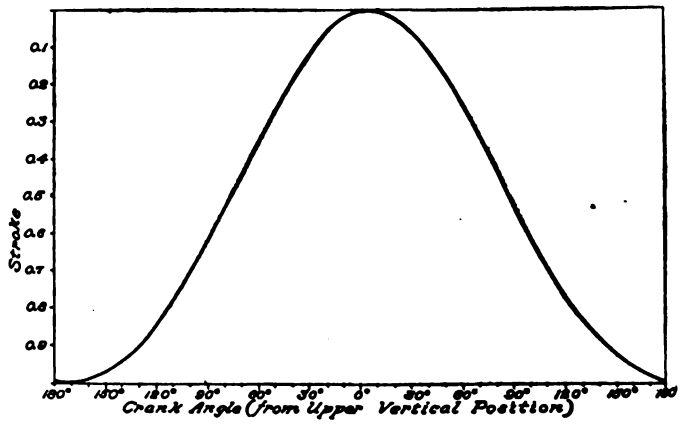

FIG. 98.—CRANK ANGLE-STROKE CURVE FOR MOTOR WITH AN OFFSET EQUAL TO ONE-FIFTH THE STROKE.

angle or a function of it directly involves considerable difficulty, and the best method is to proceed backwards, assuming different crank angles and then determining the corresponding point on the stroke by means of equation (61). From the results thus obtained a curve like that shown in Fig. 98 can be drawn. It is, of course, also possible to determine the points for this curve graphically without calculation, by laying off the connecting rod and crank arm for different angular positions of the latter. From Fig. 98 we can readily determine the crank angle corresponding to any point on the stroke. The connecting rod angle is next determined by means of equation (60) and the effective

piston pressure from the standard diagram. Multiplying corresponding values of the connecting rod angle and the effective piston pressure together, we obtain the side thrust on the cylinder wall.

In this way the curves in Fig. 99 were plotted. The calculations were based on the assumption of a cylinder of 4 inch bore by 5 inch stroke. The full line curve gives the side thrust of the piston on the cylinder wall per square inch of piston head area for an offset equal to one-sixth the bore, and the dotted line the corresponding values for an offset equal to one-quarter the bore. In a 4x5 inch motor one-sixth of the bore corresponds to two-fifteenths of the stroke and one-quarter of the bore to one-fifth the stroke. In the figure the offsets are given in terms of the stroke so as to make the diagram applicable to all sizes of motors. For the sake of comparison, the side thrust diagram for a symmetrical motor obtained under the same conditions is also drawn in in dashed lines. Since we are not so much concerned with what side of the cylinder the piston presses against, as with the total pressure with which it bears against the cylinder walls, all side thrusts are plotted on the same side of the base line, irrespective of their direction.

By reference to Fig. 97 it can readily be seen that in an offset motor the connecting rod angle is comparatively small throughout the power stroke, and comparatively large throughout the compression stroke. For this reason the side thrust on the cylinder wall in an offset motor is less than in a symmetrical motor during the power stroke and greater than in a symmetrical motor during the compression stroke. This is clearly shown in Fig. 99. In a symmetrical motor the side thrust becomes zero when the crank is in the two vertical positions. In an offset motor, on the other hand, when the crank is in its lowest position (represented in the diagram by the left hand co-ordinate axis), the connecting rod makes an appreciable angle with the cylinder axis. During the first part of the compression stroke, the greater the offset the greater the side thrust, because the greater the angularity of the connecting rod. The side thrust becomes zero in all three types of motors when the piston is slightly less than four-tenths of the stroke from its top position, because, in the diagram worked from the inertia and gas pressure then neutralize each other so that the effective piston pressure is zero. At the end of the compression stroke the side thrust is again zero, because at this point of the diagram the inertia and compression pressure again balance each other. From this point on the side thrust in the symmetrical motor increases rapidly; in the

offset cylinder motor, on the other hand, it increases for a moment and ther drops back to zero again, which it attains when the connecting rod centre coincides with the cylinder axis; from that point on the side thrust increases in about the same manner as in the symmetrical motor, but decreases to zero again a moment before the crank reaches the lowest position, when the connecting rod is again in line with the cylinder axis. It will be seen from Fig. 99 that under the conditions here assumed, the mean side thrust on the cylinder wall during the compression and power strokes is 11.2 pounds per square inch of piston head area in a symmetrical motor; 8.9 pounds in a motor with an offset equal to two-fifteenths of the stroke, and 7.8 pounds in a motor with an offset equal to one-fifth the stroke. Offsetting the cylinder by an amount equal to two-fifteenths the stroke results therefore in a reduction of 20.5 per cent. in the side thrust on the cylinder wall during the compression and power strokes, and offsetting by an amount equal to one-fifth the stroke in a reduction of about 30 per cent.

Effect on Timing—The valves should begin to open and should close and the spark in a motor should occur when the piston is at particular points of its stroke, and since any particular point of the stroke corresponds to a different crank angle in an offset motor than in a symmetrical motor, it is plain that these functions should occur at different angular positions of the crank in an offset motor than in a symmetrical motor. If the designer knows of a valve timing system which gives satisfaction in a symmetrical motor and wants to apply the same system in an offset motor, he should first determine, by means of equation (19), the piston positions corresponding to the different crank angles used in the timing system in the symmetrical motor, and then determine by means of Fig. 98 (or a similar curve if the offset is more or less than one-fifth the stroke) the crank angles corresponding to these piston positions in an offset motor.

One of the peculiar effects of offsetting in a four cylinder engine is that all four pistons travel in the same direction—downward—for a moment after two have passed the top dead centre.

Effect on Balance—An inertia force curve for a 4x5 inch motor with an offset of one inch, reciprocating parts weighing 0.55 pound per square inch of piston head area and operating at 1,000 feet piston speed per minute, is shown in Fig. 100. The data from which this curve was drawn were calculated by means of

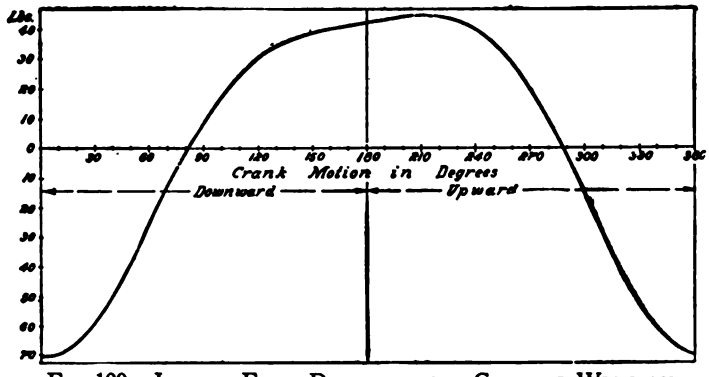

FIG. 100.—INERTIA FORCE DIAGRAM FOR A CYLINDER WITH AN OFFSET OF ONE-FIFTH THE STROKE.

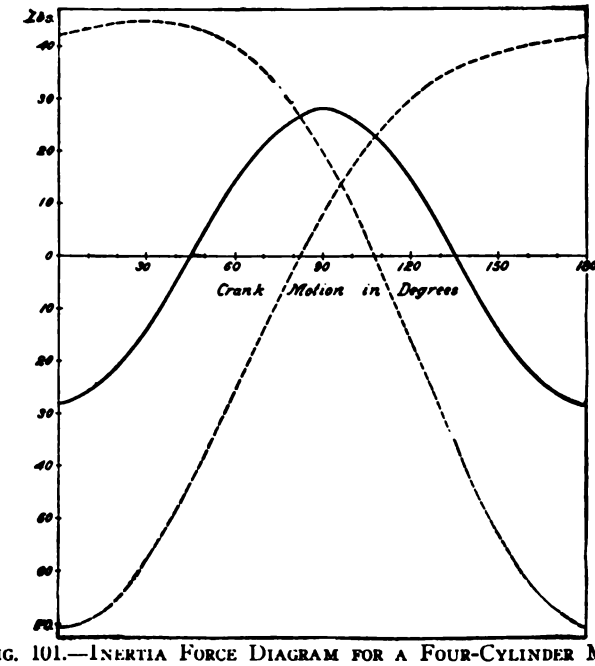

FIG. 101.—INERTIA FORCE DIAGRAM FOR A FOUR-CYLINDER MOTOR WITH AN OFFSET EQUAL TO ONE-FIFTH THE STROKE.

equation (65). It will be noticed that the curve is considerably distorted. When the crank is in the vertical positions the inertia forces are exactly the same as in a corresponding symmetrical motor. The inertia reaches both of its maxima during the upward stroke.

In Fig. 101 one-half of this inertia curve is shifted 180 degrees with relation to the other. This represents the conditions in a four cylinder motor in which the motion of one pair of cranks is advanced 180 degrees with relation to that of the other pair. The two portions of the inertia curve are drawn in in dotted lines and their resultant is drawn in in a full line. This resultant is exactly the same as is obtained in the case of a corresponding symmetrical motor; consequently, offsetting of the cylinder has absolutely no effect on the unbalanced inertia force in a motor. That this is so can also easily be proven analytically.

In a four cylinder motor there are two sets of moving masses separated by 180 degrees of crank motion. The inertia of one set may be represented by the equation

$$F_a = 0.0000142\, W l N^2 \left(\frac{1}{2\,n}\cos 2\,\theta + \frac{f}{n\,l}\sin\theta + \frac{l}{2}\cos\theta\right)$$

and that of the other by

$$F_{a_1} = 0.0000142\, W l N^2 \left[\frac{1}{2\,n}\cos 2\,(\theta + 180^\circ) + \frac{f}{n\,l}\sin(\theta + 180^\circ) + \frac{l}{2}\cos(\theta + 180^\circ)\right]$$

The resultant unbalanced inertia force is the sum of these two expressions.

But

$$\sin\theta = -\sin(\theta + 180^\circ)$$

and

$$\cos\theta = -\cos(\theta + 180^\circ),$$

hence the terms involving the factors $\sin\theta$ and $\cos\theta$ cancel out in the sum. On the other hand,

$$\cos 2\,(\theta + 180^\circ) = \cos(2\,\theta + 360^\circ) = \cos 2\,\theta.$$

Hence

$$F_a + F_{a_1} = 0.0000142\, W l N^2 \left(\frac{1}{n}\cos 2\,\theta\right) \qquad (66)$$

This is the equation of the unbalanced inertia force. It will be seen that it does not involve the factor f, and the same result

is obtained if the expression for the unbalanced inertia force in a four cylinder symmetrical motor is made the basis of the discussion.

With motors of comparatively long stroke offsetting of the cylinders involves some difficulty, because there usually is not sufficient clearance for the connecting rod during the power stroke. This difficulty can be overcome by casting the bottom end of the cylinder with a sort of slot, into which the connecting rod can swing, or curving the connecting rod near its lower end.

In the above discussion a low speed motor was purposely chosen as an example, because offsetting is undoubtedly most advantageous in motors of that class. This is due to the fact that in a high speed motor there is much side thrust on the cylinder walls due to the inertia, and since the average of this is the same for both up and down strokes the average value of the side thrust due to it for the two strokes cannot be reduced by offsetting. For instance, in the 3½ x 5 high speed motor, which we have been considering previously, the average side thrusts per square inch of piston head area at 1,800 r.p.m. during the four strokes of a cycle are as follows:

Inlet	8.9 lbs.
Compression	7.5 lbs.
Power	20.4 lbs.
Exhaust	8.9 lbs.

It will readily be seen that if by offsetting we reduced the average side thrust during the power stroke in the ratio of, say, 4:3, and increased the average side thrust during the compression stroke in the inverse ratio, the result on the total average for the four strokes would be very small. In fact, it would be reduced only from 11.4 to 10.8 lbs.

CHAPTER IX.

THE CRANKSHAFT.

One of the most important parts of the gasoline motor is the crankshaft. It is an expensive part, requiring a very considerable amount of accurate machine work to be done upon it, and it is subjected to very severe strains, consequently it is liable to fail in service unless properly dimensioned and made of a suitable grade of material properly treated.

Crankshaft Material—Medium carbon steel is the material most extensively used for crankshafts. The blanks from which the crankshafts are machined are generally produced by the drop forging process, though where a high grade of car is turned out in comparatively small numbers the crankshafts are sometimes turned up out of solid billets. The drop forging process requires several heatings to a good red heat; this heating impairs the physical qualities of the steel, and the latter have to be restored by suitable heat treatment, consisting of annealing, quenching and reheating. The carbon steel generally used for crankshafts has approximately the following composition and physical properties (after heat treatment):

CHEMICAL COMPOSITION.

		Per Cent.
Carbon		0.45
Manganese		0.60
Silicon	not over	0.18
Sulphur	not over	0.04
Phosphorus	not over	0.04

PHYSICAL PROPERTIES.

Tensile strength	90,000 lbs. per sq. in.
Elastic limit	70,000 lbs. per sq. in.
Elongation in 2 inches	15 per cent.
Contraction of area	38 per cent.

A suitable heat treatment for steel of this character is as follows: The forgings are first heated to a temperature of about 1,500° Fahr. and quenched in oil. They are then reheated to

1,450° Fahr. and allowed to anneal (cool slowly) in lime. They are heated again to 1,450° Fahr. and quenched in oil, and are then drawn to about 900° Fahr. The drawing temperatures may be varied more or less, a lower drawing temperature giving a stronger shaft and a higher drawing temperature a tougher or more ductile shaft.

In a number of the higher grades of automobile motors 3½ per cent. nickel steel is used for the crankshaft. The (approximate) composition and physical properties of this steel (after heat treatment) are as follows:

CHEMICAL COMPOSITION.

		Per Cent.
Carbon		0.25
Nickel		3.5
Manganese		0.60
Silicon	not over	0.18
Sulphur	not over	0.04
Phosphorus	not over	0.04

PHYSICAL PROPERTIES.

Tensile strength	120,000 lbs. per sq. in.
Elastic limit	90,000 lbs. per sq. in.
Elongation in 2 inches	16 per cent.
Contraction of area	50 per cent.

The heat treatment for this steel is simpler than that for carbon steel, and consists merely in quenching in oil at a temperature of 1,530° Fahr., reheating to 900° Fahr., or thereabouts, and then cooling slowly.

Other materials used in the construction of crankshafts are chrome-nickel steel and chrome-vanadium steel. Both of these can be given exceedingly high tensile strength combined with a high ductility. A chrome-vanadium steel, for instance, incorporating 1 per cent. of chromium and from 0.16 to 0.18 per cent. of vanadium, has, according to J. Kent Smith, a tensile strength of 127,800 pounds, an elastic limit of 110,100 pounds, an elongation of 20 per cent. and a contraction of area of 58 per cent., when quenched in lard or fish oil at 1,650° Fahr., annealed for two hours at 1,000° Fahr. and cooled in air. Even better properties can be obtained with chrome-nickel steel when suitably treated, but owing to the fact that this material is very hard to machine, it is little used for crankshafts. Vanadium steel machines with less difficulty. Vanadium when added to steel containing no other metallic alloys in appreciable quantity considerably improves the endurance properties of the steel, but in order to materially increase the tensile strength the addition of another metal is necessary, such as nickel, chromium or tungsten.

It may be pointed out here that the physical properties of the material are generally left out of account in determining the dimensions of the crankshaft. The reason for this is that one of the chief requirements in a crankshaft is stiffness or rigidity. This depends upon the coefficient of elasticity of the material, which is substantially the same for all grades of steel (in the neighborhood of 30,000,000).

Types of Crankshafts—A crankshaft is composed of the crank pins, crank arms, crank journals and driving ends. As a rule, crankshafts are made from integral forgings, but occasionally they are built up. Built-up crankshafts are used for two reasons. In the first place, it is quite customary abroad to enclose the flywheels of small single and double cylinder motors in the crankcase, and the flywheels then take the place of the crank arms, the crank pin and crank journals being bolted to the flywheels by means of nuts and tapered seats in hubs cast on the flywheels. These flywheels are cast with solid webs. The other reason for using built-up crankshafts is that if ball bearings are to be used on the intermediate journals, in the case of an integral crankshaft the inner race has to be of such a large diameter that it can be stripped over the crank arms. To avoid this the cranks are built up of a number of parts in such a manner that ball bearings with a bore of the inner race equal to the journal diameter can be put in place on the journal.

The most common types of crankshafts for motors of from one to twelve cylinders are illustrated in Fig. 102. The four cylinder crankshafts shown also serve for eight cylinder engines and the six cylinder crankshafts, for twelve cylinder engines. It should here be pointed out that a crank pin, together with the two crank arms on opposite sides of it, is frequently referred to as a "throw." By reference to the figure it will be seen that in some crankshafts there is only a single throw between a pair of crank journals or supporting bearings; in other crankshafts there are two throws between crank journals; in others three, and in still others four. The dimensions of the crank pins are naturally largely determined by their function as a bearing, and it might be thought that the unit pressure on the pins should be approximately the same in crankshafts of all types and sizes. However, when there are several throws between supporting bearings the pins must necessarily be made of large diameter, so as to be able to withstand the bending stresses to which they are subjected at the moment of explosion, and since with a larger pin diameter the rubbing speed is greater, the unit pressure must be reduced if there is not to be undue heating at the bearing.

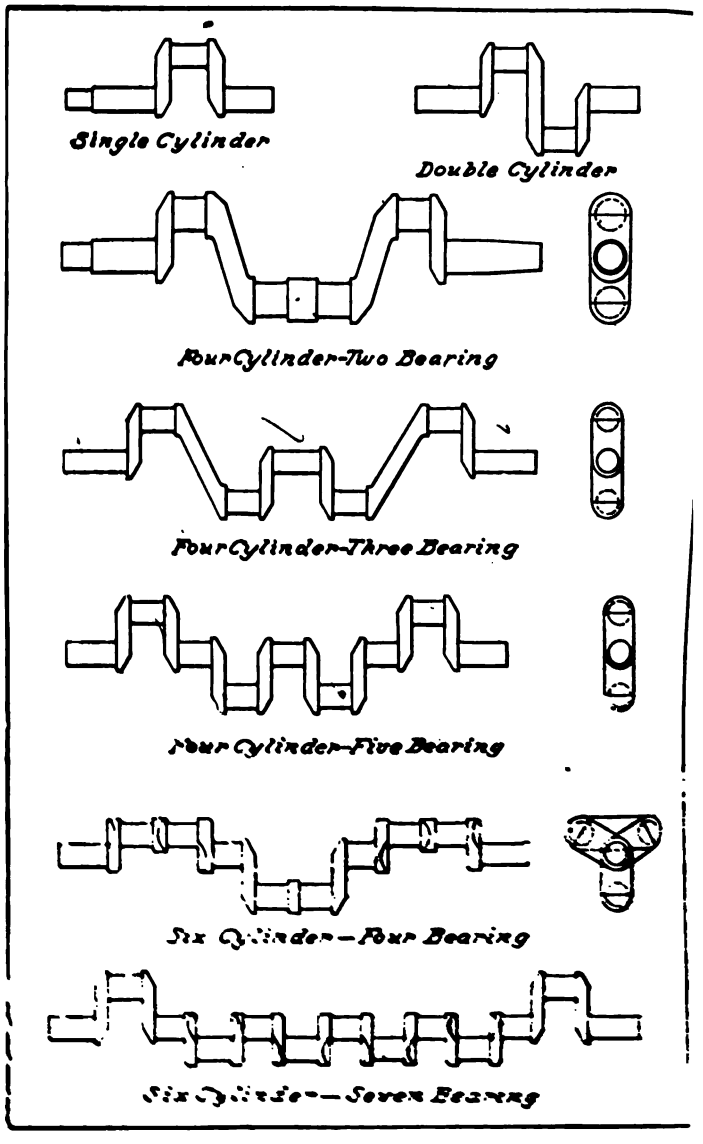

FIG. 102.—TYPES OF CRANKSHAFTS

Balancing Crankshafts—In a single cylinder crankshaft the centrifugal force on the crank arms, crank pin and part of the connecting rod forms an unbalanced rotating force which would cause a great deal of vibration if no means were provided for properly balancing it. The method generally resorted to consists in applying balance weights to the crank arms, as pointed out in the chapter on Balancing of Engines. The method of calculating the proper balance weight was there given. The balance weight should be such that the centrifugal force acting on it is equal to the centrifugal force acting on the crank arms, crank and half of the connecting rod, plus one-half of the maximum inertia force acting on the reciprocating parts.

The balance weights in a high speed motor must be securely fastened to the crank arms, since the strains due to the centrif-

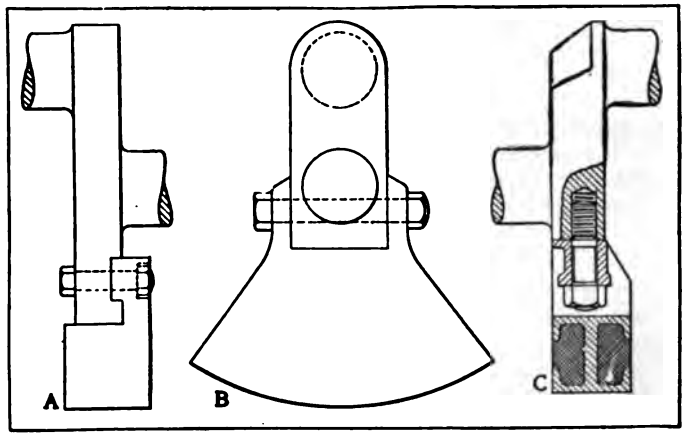

FIG. 103.—METHODS OF FASTENING BALANCE WEIGHTS.

ugal force at "racing" speeds are very considerable, and the loosening of one of the weights would be sure to do serious damage. Three methods of fastening the balance weights are illustrated in Fig. 103. The most secure way is undoubtedly to extend the crank arms to the opposite side from the crank pin, milling a transverse groove into the arms on the outer side near the end, fitting a counterweight with a tongue into this groove, and bolting it in place (see *A*, Fig. 103). The clamping bolt is then relieved of all shearing stresses. A method that is extensively used in marine practice is represented at *B* in the same figure. In this case the counterweight is held in place by a bolt

which passes through the end of the crank arm, and through portions of the counterweight passing over the end of the arm. At *C* is shown the method employed in the Brush single cylinder motor, the counterweight being held in place by a stud and nut, the stud being screwed into the crank arm from the end. In the Brush motor the counterweights are filled with lead to get the necessary weight into a small space.

In a double cylinder opposed motor the crankshaft is always made with two throws set at 180 degrees relative to each other. In this way one set of reciprocating parts always moves opposite to the other set, and at exactly the same speed, so that the reciprocating parts are perfectly balanced, except for the fact that the two sets are not quite in line with each other. The rotating parts are also very nearly balanced, since the centrifugal force acting on one throw is equal and opposite in direction to the centrifugal force acting on the other throw, and there is only a small couple due to the centrifugal forces acting on arms equal to half the distance between the cylinder axes. This is generally so slight that it can be neglected, and no special means for balancing such a crankshaft are needed.

In a four cylinder vertical motor the four throws are always in the same plane, the two outer throws being on the same side of the crankshaft centre, and the two inner throws on the opposite side. The centrifugal force acting on each throw is a radial rotating force which may be considered to act at the centre of that throw. The centrifugal forces F on the two outer throws (Fig. 104) are naturally always in the same plane, and as they are equal, their resultant R is a force equal to twice that acting on the individual throw, acting at a point midway between the two throws. The resultant R_1 of the centrifugal forces F_1 acting on the two inner throws is exactly equal to the resultant of the centrifugal forces acting on the two outer throws, and acts at the same point but in the opposite direction to the latter; consequently it neutralizes or balances it.

But while a crankshaft of this type is perfectly balanced as a whole, its individual throws are unbalanced, and since the crankshaft is more or less flexible, the centrifugal force acting on the individual throws tends to produce a pressure of the crank journals adjacent to these throws on their bearings. To overcome this, some designers provide each of the short crank arms in a four cylinder crankshaft with a balance weight, so that the crankshaft is perfectly balanced at every point of its length.

In a four-cylinder two-bearing crankshaft there is no inherent balance, since there are only two short crank arms, and

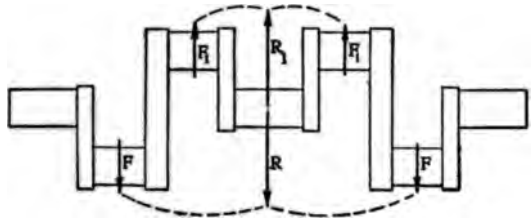

FIG. 104.—CENTRIFUGAL FORCES ON FOUR THROW CRANKSHAFT.

both of these are on the same side of the crank. There is, however, a certain length of shaft between the two inner crank pins, and by making this of somewhat greater diameter than the crank pin, and by drilling out the two outer crank pins no difficulty need be experienced in balancing such a crankshaft without the use of counterweights.

In a six-throw crankshaft the throws are arranged in pairs, the two inner ones being in line with each other, as are also the two outer ones and the two intermediate ones, respectively. Each pair of throws is located at an angular distance of 120 degrees from the other two pairs. By reference to Fig. 105, which is an end view of a six throw, seven bearing crankshaft, it can easily be seen that if all of the throws are identical, such a crankshaft is in perfect balance. The resultant F of the centrifugal forces on the two throws of each pair acts at the middle of the length of the crankshaft. The three resultants therefore all act in the same plane radially outward from the centre of the crankshaft, at angles of 120 degrees apart, and they exactly balance each other.

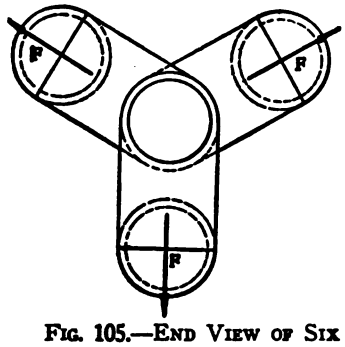

FIG. 105.—END VIEW OF SIX THROW, SEVEN BEARING CRANKSHAFT.

Six cylinder crankshafts with either three or four main bearings are not inherently balanced but can be balanced by means of a mass of metal between the two middle crank pins. In order, however, that the balancing weight required at this point may not be too great, the so-called long arms of these crankshafts, which produce the unbalanced moment, are curved inward toward the axis of the crankshaft.

Crankshaft Proportions.—Formerly the crank pin diameter was made proportional to the cylinder bore and independent of the stroke, because if the crank pin length is made proportional to the crank pin diameter, then the crank pin bearing area is proportional to the square of the diameter, and since the total explosion pressure is proportional to the square of the cylinder bore, if the crank pin diameter bears a certain proportion to the cylinder bore, the unit bearing pressure on the crank pin will be constant. However, in recent years piston speeds have been so greatly increased that explosion pressure is no longer the chief factor in determining the load on the crank pin, but, rather, the inertia of the reciprocating parts. The inertia force, however, is proportional to the length of stroke. At high engine speeds there is very little pressure on the crank pin during the first part of the explosion stroke, as the force of the explosion is nearly balanced by the oppositely directed force of inertia on the piston and the upper end of the connecting rod. Inertia forces due to the reciprocating parts are acting during all four strokes, and, therefore, it may safely be said that at high speeds the greater part of the bearing load on the crank pin is due to inertia forces. Since the inertia force is proportional to the weight of the reciprocating parts, which varies substantially as the square of the bore, and to the length of stroke, it follows that the crank pin bearing surface should be made proportional to the piston displacement. As a matter of fact, crank pin diameters have increased relatively with the increase in strokes, hence we may say that this rule has the sanction of practice.

In four-cylinder engines it is now customary to use three bearing crankshafts, except in very small engines, in which two bearing crankshafts are used to quite an extent. Four bearing crankshafts are possible, but have little to recommend them, while five bearing crankshafts have almost passed out of existence with individual cast cylinders. In a block cast motor it is very difficult to get sufficient bearing length in a five bearing crankshaft. Of course, the cylinders can be placed at such distances apart as to make the necessary length of bearings available, but this adds greatly to the weight of the engine. It is also necessary to face the crank arms off on both sides, and this adds to the expense.

From the above it will be gathered that the dimensions of crankshafts are dictated by considerations of stiffness or rigidity (both lateral and torsional), and of bearing surface, and

that the bearing surface required in high-speed engines depends more upon the inertia of the reciprocating parts than upon the explosion pressure. Since all steels have substantially the same coefficient of rigidity, we can neglect the physical properties of the material to be used in the crankshaft. The explosion pressure, which varies with the compression ratio, may also be neglected. In the following are given empirical rules for dimensioning crankshafts of automobile motors, based on a mass of carefully collected data of recent motors.

Three Bearing Four-Cylinder Crankshafts.—Let

d = diameter of crank pin

l = length of crank pin bearing

d_1, d_2, d_3 = diameters of main crank journals, front to rear

l_1, l_2, l_3 = length of main crank journals, front to rear

D = piston displacement of one cylinder

w = width of crank arms (largest dimension)

t_s = thickness of short crank arms

t_l = thickness of long crank arms.

The crank pin diameter of a three bearing, four-cylinder crankshaft

$$d = \sqrt{\frac{D}{16}} \qquad (67)$$

and the length of the crank pin journal,

$$l = 1.25\ d \qquad (68)$$

In a four-cylinder three bearing crankshaft the crank journals are generally made all of the same diameter as the crank pins and the length of the different journals are made as follows:

$$l_1 = 1.25\ l$$
$$l_2 = 1.25\ l$$
$$l_3 = 1.75\ l.$$

The extra length of the rear bearing is necessary because this bearing carries the weight of the flywheel in addition to its other loads. This makes the total length of the main bearings slightly greater than the total length of the crank pin bearings, and as the bearing diameters are the same, the total main journal bearing surface is slightly greater than the total bearing surface of the crank pins.

There is a good deal of variation in practice regarding width of crank arms. This width must be greater than the diameter of the crank pin and journals so as to afford bearing surface for end thrusts. In checking up the dimensions of a large number of crankshafts the writer finds that the width of the

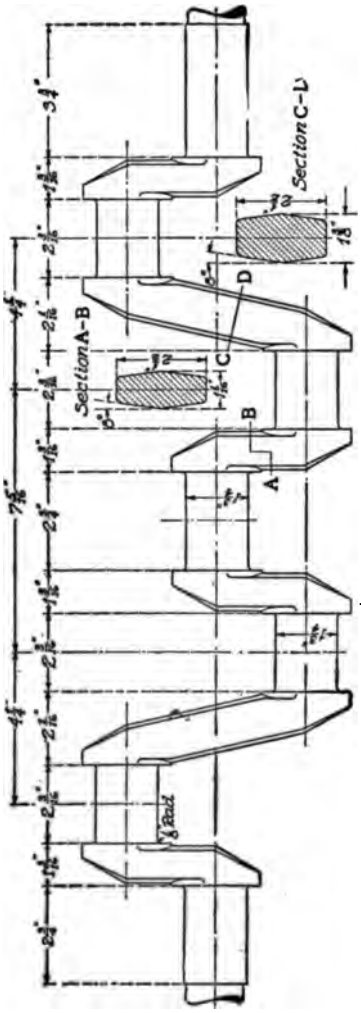

FIG. 106.—FOUR-CYLINDER, THREE-BEARING CRANKSHAFT FOR 3½ x 5-INCH ENGINE.

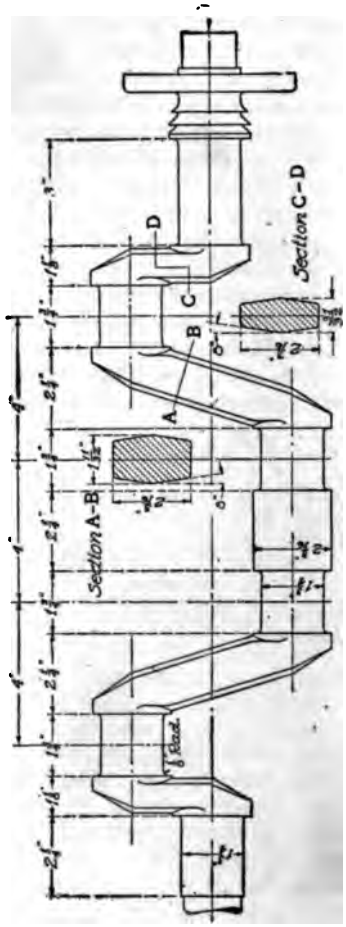

FIG. 107.—FOUR-CYLINDER, TWO-BEARING CRANKSHAFT FOR 3¼ x 4½-INCH ENGINES.

crank arms varies between 1.2 d and 1.58 d. In a rigid shaft there is end thrust only on the main journals and this is sometimes provided for by forging the crank with circular flanges on both sides of the central journal, as shown in Fig. 108, or at both sides of the rear journal, as exemplified in Fig. 107. In either of these cases the width of arm can be made

$$w = 1.25\ d,$$

but if the crank arms themselves are to be sufficiently wide to afford sufficient bearing surface it is well to make

$$w = 1.4\ d.$$

The thickness is, of course, different for the short and the long arms, because the bending moment is greatest in the latter. The resistance to bending of the arms in the plane of the crankshaft must be proportional to the resistance to bending of the crank pins. The latter is proportional to the cube of the crank pin diameter and the former to the product of the width into the square of the thickness. Hence we have

$$c\ d^3 = w\ t^2.$$

If c has a value of 0.59 then the crank pin and crank arm would have the same resistance to bending in the plane of the crankshaft. As the bending moment is greater in the long arm and smaller in the short arm than in the crank pin it is logical to use a somewhat smaller constant for the short arm and a somewhat greater one for the long one. We will make these constants 0.36 and 0.64, respectively, which gives

$$t_s = 0.6\sqrt{\frac{d^3}{w}} \qquad (69)$$

and

$$t_l = 0.8\sqrt{\frac{d^3}{w}}. \qquad (70)$$

In all drop forged unfinished crankshafts the section, of course, is not a parallelogram, as draft has to be allowed on the two long sides, amounting usually to about 7 degrees. In applying the above formulae the calculated thickness can be taken as the mean between the minimum and the maximum thickness.

Applying the equations to a four-cylinder 3½ x 5-inch motor, which has a piston displacement of 48.1 cu. in., we obtain the following results:

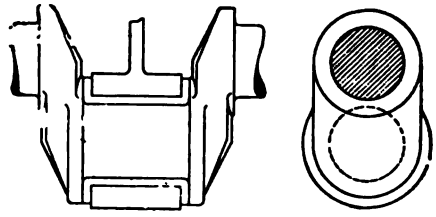

FIG. 108.—THRUST FLANGES ON CRANKSHAFT

$$d = \sqrt{\frac{48.1}{16}} = 1.74, \text{ say } 1\tfrac{3}{4} \text{ inches}$$

$l = 1.25 \times 1.74 = 2.18$, say 2 3/16 inches
l_1 and $l_2 = 1.25 \times 2.18 = 2.70$, say $2\tfrac{3}{4}$ inches
$l_3 = 1.75 \times 2.18 = 3.82$, say $3\tfrac{3}{4}$ inches
$w = 1.4 \times 1.74 = 2.43$, say $2\tfrac{1}{2}$ inches

$$t_2\ 0.6 \sqrt{\frac{1.75^3}{2.5}} = 0.876, \text{ say } \tfrac{7}{8} \text{ inch}$$

$$t_1\ 0.8 \sqrt{\frac{1.75^3}{2.5}} = 1.17, \text{ say } 1\ 3/16 \text{ inches.}$$

Two Bearing, Four-Cylinder Crankshafts.—Two bearing four-cylinder crankshafts, as a rule, are used only on engines of less than 200 cu. ins. piston displacement. Crank pin and crankshaft journals are made of the same diameter.

The following rules apply:

$$d = \sqrt{\frac{D}{12.5}} \quad \ldots\ldots\ldots\ldots\ldots\ldots (71)$$

$$l = d \quad \ldots\ldots\ldots\ldots\ldots\ldots (72)$$

$$l_1 = 1.3\ l$$
$$l_2 = 1.7\ l$$
$$w = 1.25\ d$$

$$t_2 = 0.55 \sqrt{\frac{d^3}{w}} \quad \ldots\ldots\ldots\ldots\ldots\ldots (73)$$

$$t_1 = 0.8 \sqrt{\frac{d^3}{w}} \quad \ldots\ldots\ldots\ldots\ldots\ldots (74)$$

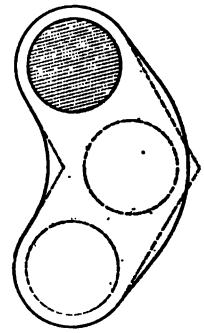

FIG. 109. — FORM OF LONG ARMS OF SIX-CYLINDER, THREE-BEARING CRANKSHAFT

Let us now apply the preceding equations to the case of a 3¼ x 4½-inch engine, which has a piston displacement per cylinder of 37.4 cubic inches.

$$d = \sqrt{\frac{37.4}{12}} = 1.76, \text{ say } 1\tfrac{3}{4} \text{ inches}$$

$l = d = 1\tfrac{3}{4}$ inches
$l_1 = 1.3\ l = 2.29$, say $2\tfrac{1}{4}$ inches
$l_2 = 1.7\ l = 3$ inches
$w = 1.25\ d = 2.19$, say 2 3/16 inches

$$t_2 = 0.55 \sqrt{\frac{1.76^3}{2.19}} = 0.82, \text{ say } 13/16 \text{ inch}$$

$$t_1 = 0.8 \sqrt{\frac{1.76^3}{2.19}} = 1.19, \text{ say } 1\ 3/16 \text{ inches.}$$

This crankshaft is shown in Fig. 107. It will be seen at once that such a crankshaft is not symmetrical about a plane through its axis perpendicular to the plane through the crank arms, and it is, therefore, not inherently balanced. The two short arms are both on the same side, and they must be balanced by the block of metal between the two middle crank pins, which must be made of sufficient diameter so that its moment around the crank axis exactly balances the moment of the two short arms.

In a crankshaft of this type it is well to take up end thrust in both directions on thrust collars to both sides of the rear main journal, as shown in the figure. This entirely relieves the cranks of end thrust resulting from forces outside the engine. When provision is thus made to take up the thrust at certain points, a slight clearance must be allowed at other points where thrust might be taken up, as on the inside of the front main journal in this case.

Six-Cylinder Three Bearing Crankshafts.—Crankshafts of six-cylinder motors are supported on three, four or seven bearings, the first mentioned construction being the most popular. Of the 1915 American six-cylinder models, 44 per cent. had three bearing crankshafts, 37 per cent. four bearing crankshafts and 19 per cent. seven bearing crankshafts. The three bearing crankshaft goes together most naturally with cylinders cast in threes, the four bearing crankshaft with cylinders cast in pairs and the seven bearing crankshaft with individually cast cylinders, but the different types of crankshafts are by no means limited to the respective forms of construction.

In the case of a three bearing crankshaft, since there are three throws between supports, the crank pins and crank arms must be of very substantial form. Following are rules for the dimensions of crankshafts of this type:

$$d = \sqrt{\frac{D}{12}} \quad \text{.....} (75)$$

$$l = 1.06\, d \quad \text{.....} (76)$$

$$l_1 = 1.3\, l$$
$$l_2 = 1.3\, l$$
$$l_3 = 1.75\, l$$

$$w = 1.25\, d \quad \text{.....} (77)$$

$$t_s = 0.55 \sqrt{\frac{d^2}{w}} \quad \text{.....} (78)$$

$$t_1 = 0.8 \sqrt{\frac{d^2}{w}} \quad \text{.....} (79)$$

These rules give for a 3½ x 5-inch motor of a piston displacement of 48.1 cu. ins. per cylinder, the following crankshaft dimensions: Crank pin diameter, 2 inches; crank pin length, 2⅛ inches; diameter of main journals, 2 inches; length of front and central journals, 2¾ inches; length of rear journal, 3¾ inches; width of crank arms, 2½ inches; thickness of short arms, 1 inch; thickness of long arms, 1 7/16 inches.

In a six-cylinder three bearing crankshaft there are, of course, three throws between supports, the central one of the three crank pins having a long arm on both sides and the other two crank pins a long arm on one side and a short arm on the other. Adjacent crank pins are always 120 degrees apart and it can easily be shown that if the long crank arms were run straight across from one crank pin to the adjacent one the crankshaft would not be in balance. In order to secure absolute balance the long arms should run from one pin radially inward to the crankshaft axis and then radially outward to the adjacent crank pin, so its two parts make an angle of 120 degrees with each other. Formerly, these cranks were sometimes made with short crank arms only, with a short dummy journal between the two short arms which take the place of the long arm. Such a construction, while in absolute balance, is not as rigid as it can be made without an increase in the amount of metal used. In actual practice the arm is curved inward so it passes through the axis of the crankshaft, and it also slightly advances helically in the direction of the

axis, as shown in Fig. 109. In laying out the arm to ensure proper balance it is well to start with the double short arm, as shown in dotted lines in the figure, and any fillet on the inside must then be balanced by a corresponding amount of material on the outside. This type of crankshaft is used mainly on engines with all cylinders cast en bloc or in two sets of three each. In the former case there must be left considerable space between cylinders Nos. 3 and 4 in order to make room for the central crankshaft bearing. This space can be slightly reduced and the engine thus rendered more compact, by making the two central short arms somewhat thicker in the first place and then turning them down to a rectangular cross section, so that the crank pin bearing surface extends right up to the inner plane surface of the crank arm, but as this further disturbs the symmetry of the crank it requires greater care in balancing.

Six-Cylinder Four Bearing Crankshaft.—This type fits in particularly well with engines having their cylinders cast in pairs, because there is naturally room for the two intermediate crankshaft journals between adjacent cylinder pairs. Owing to the fact that there are only two throws between supports the crank pins and arms can be made lighter, relatively, than in the previously described type. Following are the rules for crank pin dimensions:

$$d = \sqrt{\frac{D}{15}} \quad \text{.....(80)}$$

$$l = 1.1\ d \quad \text{.....(81)}$$

It will be seen that this rule gives a decidedly smaller crank pin than is given by the rule for the three bearing crankshaft. The use of this is justified because the chief stress on the crank pin is in the nature of bending stress, and in the four bearing crankshaft the maximum bending moment is much less than in the three bearing crankshaft, because of the shorter distance between supports in the former. However, in a six-cylinder engine torsional weakness of the long crankshaft is an important factor to look out for. The turning effort or torque on the crankshaft due to explosion pressure and inertia forces varies constantly and suddenly, and as the heavy flywheel prevents any sudden changes in motion of the rear end of the crank, the crankshaft will twist under these variable torsion forces. Each crankshaft has a definite period of tor-

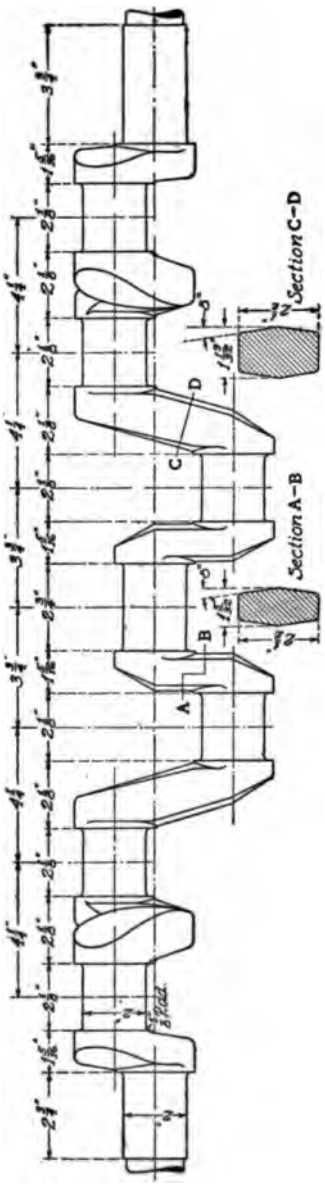

FIG. 110.—SIX-CYLINDER, THREE-BEARING CRANKSHAFT FOR 3½ x 5-INCH ENGINES.

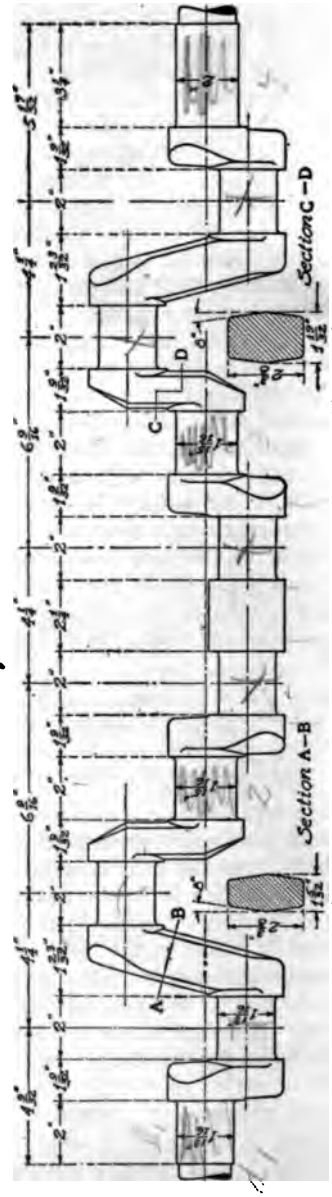

FIG. 111.—SIX-CYLINDER, FOUR-BEARING CRANKSHAFT FOR 3½ x 5-INCH ENGINES.

sional vibration and if the engine speed happens to be such that the interval between explosions is equal to the natural period of vibration of the crankshaft, violent vibrations will be set up. In order to minimize this the shaft must be made very stiff torsionally. The torsional deflection of a crankshaft is made up of deflections of its individual parts—crank pins, crank arms and crank journals—but it is directly evident that the crank journals contribute much more to this deflection than the crank pins. Therefore, in order to reduce torsional vibration the crank journals should be made heavier, particularly the rear one, which is longer than the others and is subjected to the greatest torque. It is well to make the rear journal of the same diameter as it would be made in a three bearing crankshaft, viz.,

$$d_4 = \sqrt{\frac{D}{12}}$$

the front one the same as the crank pin diameter,

$$d_1 = \sqrt{\frac{D}{15}}$$

and the two intermediate journals of a diameter about equal to the mean of these two, viz.,

$$d_2 \text{ and } d_3 = \sqrt{\frac{D}{13}}$$

All of the crank arms of the same kind must, of course, be alike, as otherwise the crankshaft would be difficult to balance. The length of the rear bearing should be

$$l_4 = 1.6\ l$$

and the lengths of the other three bearings should be equal to l. The width of all arms

$$w = 1.35\ d;$$

the thickness of the short arms,

$$t_2 = 0.65 \sqrt{\frac{d^3}{w}}$$

and the thickness of the long arms

$$t_1 = 0.85 \sqrt{\frac{d^3}{w}}.$$

ence we get the following dimensions for a four bearing ankshaft for a six-cylinder 3½ x 5-inch motor with 48.1 cubic

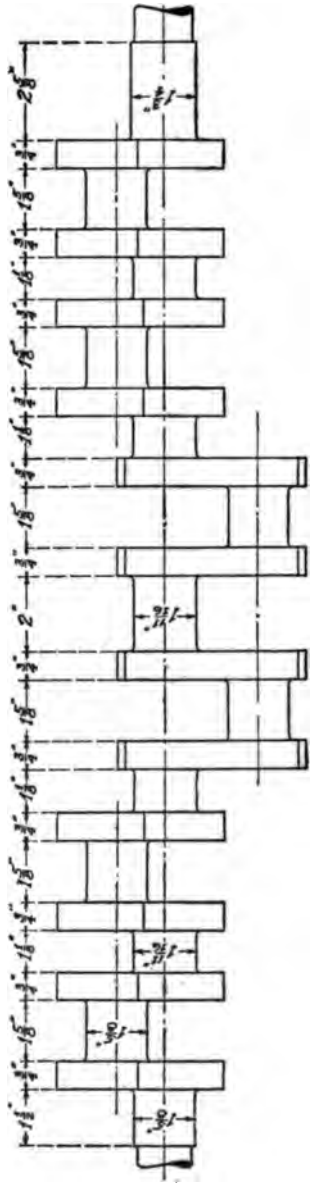

FIG. 112.—SIX-CYLINDER, SEVEN-BEARING CRANKSHAFT FOR 3½ x 5-INCH MOTOR.

inches piston displacement per cylinder. Crank pin diameter, 1 13/16 inches; crank pin length, 2 inches; front crankshaft bearing, 1 13/16 x 2 inches; rear crankshaft bearing, 2 x 3¼ inches; intermediate crankshaft bearings, 1 15/16 x 2 inches; width of crank arms, 2⅝ inches; thickness of short crank arms, 1 inch; thickness of long crank arms, 1 7/16 inches.

Six-Cylinder Seven-Bearing Crankshafts.—In a seven-bearing crankshaft the tendency to torsional vibration is probably greater than in any other type, owing to the greater aggregate length of the main journals. On the other hand, the bending moments are small, owing to the short distances between supports, hence it seems logical to make the crank pins of smaller diameter than the main journals. As an instance of the extremes to which some designers have gone to prevent torsional vibration in six-cylinder engines it may be mentioned that the Sheffield Simplex six-cylinder 3½ x 5 inch engine has a seven-bearing crankshaft with main journals 2¾ inches in diameter. In order to secure adequate bearing surface without unnecessarily lengthening the engine the crank arms must be finished on the sides at least and the journals must come right up to the sides of the arms. Another thing to be remembered is that the central bearing is subject to greater loads from inertia forces than any of the others, and for that reason should preferably be made longer than the other intermediate bearings. This may be explained as follows: All loads on one crank pin are considered as equally divided between the two adjacent main journals. Now, the two pistons on opposite sides of the central bearing are in phase, so that their inertia forces always add together. On the other hand, the pistons on opposite sides of the other intermediate bearings are 120 degrees out of phase, and the resultant of the two forces over a complete revolution is equal only to the inertia force of a single piston, because soon the two are of the same sign, and, therefore, add, and soon they are of opposite sign. However, the inertia load on the crank journal would not be quite halved by this condition, owing to the lateral displacement between the simultaneous forces. But in any event the inertia load on the central main journal is considerably greater than that on the other intermediate journals.

Rules for crank pin dimensions are as follows:

$$l = 1.06\ d.$$

$$\frac{D}{a} = 18.$$

The total bearing area of the main journals may be made 0.38 D. This may be divided between the different bearings as follows: Front, 15%; central, 18%; rear, 25%; others, 10.5% each. The ratios of length to diameter of the rear bearing can be made 1.5. The front bearing can be made of the same diameter as the crank pin, and the intermediate bearings of a diameter equal to that of the rear bearing or intermediate between the diameters of the front and rear bearings. The crank arm width can be made anything desired from 1.25 d to 1.5 d and the thickness

$$t = 0.6\sqrt{\frac{d^2}{w.}}$$

These rules give for a six-cylinder, seven-bearing crankshaft for a 3½ x 5 inch engine the following dimensions: Crank pin diameter, 1⅝ inches; crank pin length, 1⅝ inches (the formulae give the dimensions 1.59 x 1.68, but, of course, it is the intention that round figures be chosen for the dimensions, and 1⅝ x 1⅝ inches gives about the same bearing area); front journal diameter, 1⅝ inches; front journal length, 1½ inches; rear journal diameter, 1¾ inches; rear journal length, 2⅝ inches; central journal diameter, 1 11/16 inches; central journal length, 2 inches; diameter of other journals, 1 11/16 inches; length of other journals, 1⅛ inches; width of crank arms, 2½ inches; thickness of crank arms, ¾ inch.

When the cylinders are cast in pairs the bearing area of the main journals must be differently divided. Front and rear journals can, of course, be the same as in the above case, but of the five intermediate journals the two between cylinder pairs will be longer than the remaining three. The bearing area of each of the two longer intermediate bearings may be made 15% of the total, and that of each of the short intermediate bearings, 10% of the total. In case all of the cylinders are cast singly there is plenty of room for sufficient bearing area without finishing the crank arms. However, in view of present tendencies it does not appear likely that any new six-cylinder engines of this type will be designed, owing to the necessarily great length of such engines.

Eight-Cylinder Three-Bearing Crankshafts.—In an eight-cylinder motor with two sets of cylinders at an angle of 90 degrees, any of the types of crankshafts suitable for a four-cylinder motor—two, three, four and five bearing—may be

used, but the two and three bearing types are the most advantageous. In such engines two connecting rods connect to each crank pin, and there are three different methods of arranging the connecting rod big-end bearings, which affect the design of the crankshaft. These methods are as follows:

1. One connecting rod yoked and clamped to a bearing bushing, and the other having a bearing on the outside of the bushing.

2. Bearings on crank pin side by side.

3. One "master" connecting rod, having its bearing on the crank pin, and the other hinged to the master connecting rod.

The yoked form of construction is the most popular. Crank pins and crank journals can be of the same diameter. In proportion to the cylinder displacement the crank pin area will be large, and this is a very desirable feature, as with the ordinary yoked construction the crank pin bearing cannot be refitted when worn, but must have its bushing replaced. For an eight-cylinder three-bearing crankshaft with yoked connecting rods the crank pin dimensions may be made as follows:

$$\frac{l}{d} = 1.25.$$

$$\frac{D}{a} = 9.$$

The lengths of the three crank journals may be made as follows:

$$l_1 = 1.28\ l;\ l_2 = 1.06\ l;\ l_3 = 1.64\ l.$$

For a 3 x 4½ inch engine this gives the following dimensions: Crank pin, 1 11/16 x 2⅛ inches; front bearing, 1 11/16 x 2¾ inches; middle bearing, 1 11/16 x 2¼ inches; rear bearing, 1 11/16 x 3½ inches.

It results from the above figures that the second and third cylinders must be a considerable distance apart in order to make room for the middle bearing. In order to keep down the length of the engine it is well to face off the short crank arms on both sides and bring the journal right up to the finished surfaces. The long crank arms, however, can be made of the usual form with draft and left rough. The crank arm width may be made

$$w = 1.25\ d.$$

The thickness of the short crank arms

$$t = 0.5 \sqrt{\frac{d^2}{w}}.$$

and the thickness of the long crank arms

$$t_l = 0.75 \sqrt{\frac{d^3}{w.}}$$

These rules give for the dimensions of the crank arms for the 3 x 4½ inch engine crankshaft the following: Width of arms, 2⅛ inches; thickness of short arms, ⅝ inch; thickness of long arms, 1⅛ inches. With the crank pins symmetrical to the cylinder axes this calls for a space of about 2⅛ inches between cylinders Nos. 2 and 3.

Crank Journals Side by Side.—If the crank pin journals are to be placed side by side the proportions of the crankshaft can be made the same as above, with the exception of the length of the crank pin bearings, which are made as long as the distance between adjacent cylinders permits, the long crank arms also being finished on the sides. For instance, in the above case the distance between axes of adjacent cylinders would be about 3¾ inches, and as the long crank arm occupies 1⅛ inches of this space there remains 2⅝ inches for the piston pin, making the bearing surface of each connecting rod 1 11/16 x 1 5/16 inches.

Eight-Cylinder Two-Bearing Crankshafts.—Owing to the necessity of allowing considerable space between the second and third cylinders of each cylinder block in an eight-cylinder engine with a three-bearing crankshaft, many designers prefer to use a two-bearing shaft, and the latter is much more popular, relatively, for eight-cylinder than four-cylinder engines. Undoubtedly the fact that individual explosions and the inertia forces due to the reciprocating parts of a single cylinder are so much smaller makes this type of crankshaft more practical for the "eight" than it is for the "four." Following are suitable proportions for a two-bearing eight-cylinder crankshaft with which yoked connecting rods are to be used:

$$\frac{l}{d} = 1.06.$$

$$\frac{D}{a} = 6.5.$$

$$l_1 = 1.35\ l.$$

$$l_2 = 1.45\ \text{"}.$$

$$w = 1.25\ d.$$

$$t_s = 0.55 \sqrt{\frac{[illegible]}{w.}}$$

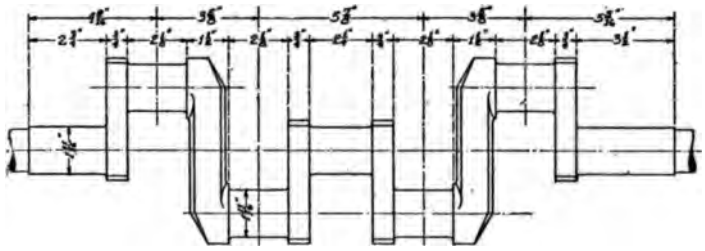

FIG. 113.—EIGHT-CYLINDER, THREE-BEARING CRANKSHAFT FOR A 3 x 4½-INCH MOTOR.

$$t_1 = 0.8 \sqrt{\frac{d^2}{w.}}$$

These rules give the following dimensions for a crankshaft for a 3 x 4½ inch engine: Crank pin, 2⅛ x 2¼ inches; front crank journal, 2⅛ x 3; rear crank journal, 2⅛ x 3¼; short crank arms, 2⅝ x 1 inches; long crank arms, 2⅝ x 1⅓. Practically the same crankshaft would be used if the connecting rod bearings were to be placed side by side; but in that case the ratio of cylinder displacement to crankpin bearing area would be 13 instead of 6.5. This figure, it may be pointed out, is still considerably less than that given for a six-cylinder seven-bearing crankshaft, for instance.

Twelve-Cylinder Three-Bearing Crankshaft.—Probably the standard type of crankshaft for twelve-cylinder motors will be the three-bearing, because the cylinders are likely to be

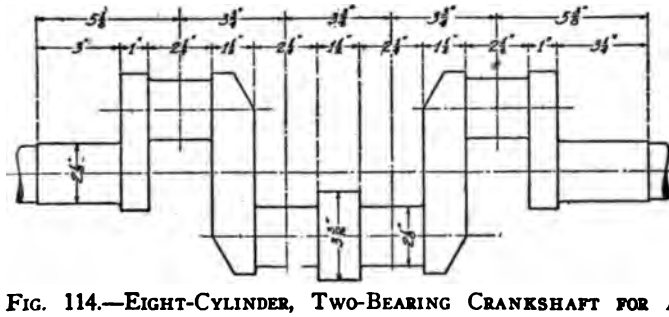

FIG. 114.—EIGHT-CYLINDER, TWO-BEARING CRANKSHAFT FOR A 3x 4½-INCH MOTOR.

always cast in blocks of six, and all intermediate bearings call for extra space between cylinders, which adds to the weight and bulk of the engine. A two-bearing crankshaft, of course, is out of the question. For yoked connecting rods the proportions can be made as follows:

$$\frac{D}{a} = 7.5.$$

$$\frac{l}{d} = 1.15.$$

$$l_1 = l;\ l_2 = 1.25\ l;\ l_3 = 1.25\ l.$$

$$w = 1.3\ d.$$

$$t_0 = 0.5\sqrt{\frac{d^2}{w.}}$$

$$t_1 = 0.7\sqrt{\frac{d^2}{w.}}$$

These rules give for a crankshaft for a 2¾ x 4½-inch engine the following dimensions: Crank pin, 1¾ x 2 inches; front journal, 1¾ x 2 inches; central journal, 1¾ x 2½ inches; rear journal, 1¾ x 2⅞ inches; short crank arms, 2¼ x ¾ inches; long crank arms, 2¼ x 1 1/16 inches. This allows of the use of unfinished long arms.

If the connecting rod bearings are to be placed side by side on the crank pin, then it is advisable to make the pin somewhat longer, and the long crank arms as well as the short ones have to be finished off. We may then make

$$\frac{D}{a} = 13.$$

$$\frac{l}{d} = 1.35.$$

The crank journal and crank arm dimensions remain the same as in the previous case. In the case of the 2¾ x 4½-inch engine the crank pin dimensions then become 1¾ x 2⅜ inches, and the dimensions of each crank pin bearing, 1¾ x 1 3/16 inches.

It will have been noticed that as the number of engine cylinders increases the excess length of the rear bearing over the other crankshaft bearings becomes less, which is due to the

fact that the flywheels of eight and twelve-cylinder engines weigh comparatively little.

Balance Weights on Six-Throw Crankshafts—What was said regarding the lack of balance of the individual throws in four-cylinder crankshafts applies equally in the case of six-cylinder crankshafts, and some makers of high speed six-cylinder engines provide each crank arm with a counter-weight such as to balance the arm to which it is attached, and one-half of the adjacent crank pin or pins. The counter-weights may be either forged integral with the crankshaft or secured to the latter by bolts. Some engineers doubt the value of the counter-weights except in certain cases. Perhaps the best method of studying the problem is to assume a standard indicator diagram, and then from the cylinder dimensions, length of connecting rod and weights of reciprocating and rotating parts and the speed of rotation calculate the different forces due respectively to gas pressure, inertia forces and centrifugal forces for each bearing in each of say, twenty points evenly distributed over the cycle. A polar diagram of bearing pressure can then be drawn, from which it can easily be seen whether or not a weight revolving at crankshaft speed could be used to reduce the bearing load and in which angular relation to the crank arms the radius from the crank axis to the center of gravity of the revolving weight should be.

Front and Rear Ends—The front end of the crankshaft must be extended to carry the driving pinion of the camshaft gear and the pin or ratchet toothed sleeve with which the starting crank engages. There may also be an oil guard formed on the shaft inside the seat for the cam gear pinion. The length of the cam gear seat may be made 0.6 times the crankshaft diameter and the length for the starting ratchet seat the same. The starting ratchet seat is made smaller in diameter than the pinion seat, and the latter smaller than the crank journal.

At the rear end of the crankshaft an oil guard is usually provided, especially if a cone clutch is to be employed. This consists of a narrow flange turned on the crankshaft just beyond the rear crank journal, with a sharp outer edge, from which the oil is flung off when the shaft turns rapidly. The oil is caught in a recess turned in the outer end of the bearing hub, from which it drains back to the crank case.

Beyond the oil guard there is generally provided an integral flange to which the flywheel is bolted. This flange is made of an outside diameter equal to the stroke, of a width equal to 1/16 inch per inch of bore multiplied by the square root of the number of cylinders and is drilled with six holes for the

reception of bolts. The diameter of the bolts may be made equal to the width of the flange. Where a very secure job is desired the holes in the flange and in the web of the flywheel are counterbored and have hardened dowel bushings inserted, which take up the driving strain.

Beyond the flywheel flange the crankshaft is generally extended a short distance to form a stud or pilot for the clutch to ride upon.

Crankshaft Blanks—Crankshafts are made either from large slabs of steel of prismatic form slightly larger than the overall dimensions of the finished shaft, or from drop forgings, which are very close to the sizes of the finished shaft. When the shaft is made from a slab it is practically impossible to provide an

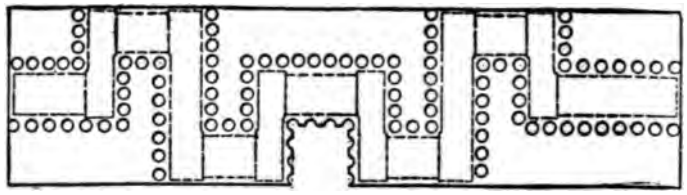

FIG. 115.—SLAB OF STEEL DRILLED TO FORM CRANKS.

integral flywheel flange, and the flywheel is then keyed on, a long tapered key seat and a thread for a nut to draw the flywheel onto its seat being provided for the purpose. The cranks are first formed by drilling and sawing, as indicated in Fig. 115, and are then rough turned, in which state they are generally delivered to the motor manufacturer. Crankshafts of this type are eventually machined all over, being planed or milled on the flat sides and turned on all other surfaces.

When the cranks are to be produced by the drop forging process a draft of about 8 degrees must be allowed on the sides of the arms, so the forgings can be readily withdrawn from the dies. The sections should be laid out so that they are equivalent to rectangular sections of the calculated dimensions. When the forgings are completed they are subjected to the heat treatment already referred to, and are then ready for machining.

Machining—Whether the crankshafts are made from slabs or drop forgings, they are generally first turned in the lathe, and the crank pin and journal bearings are then finished in a grinding machine. It was formerly customary to finish them in the lathe, but since a four or six cylinder crankshaft supported only at its ends is not very stiff, it tends to spring away from

the cutting tool, thus becoming inaccurate. In grinding, on the other hand, the pressure of the wheel against the work in taking the finishing cut is so light that there is no springing away, and an almost absolutely round journal is produced.

For turning the crank pins the crank shaft must be secured in the lathe in such a manner that the crank pin axis coincides with the lathe centre axis. After the pins in one angular position have been finished the crankshaft must be turned around so as to bring other crank pins into the axis of the lathe centres, to be machined, and the angular movement given the crankshaft must be very accurately gauged in order that the crank shaft may be absolutely true and the crank and piston motion properly balanced. Moreover, since the centre of gravity of the crankshaft, when the latter is so supported that one of its pins is in line with the lathe centres, is at a distance from the centre line of rotation, the lathe face plates or crank clamping fixtures must be provided with counterweights to balance the weight of the crankshaft, so the lathe may be run at high speed without undue vibration.

A simple clamping fixture for a four-cylinder crankshaft is shown in Fig. 116. The shaft is clamped by its outer journals in the middle of the clamping fixture. The latter is provided with two centre holes for the lathe centre, one in line with each pair of crank pins. With this fixture suitable weights for balancing the weight of the crankshaft must be clamped to the face plate, and spacers must be placed between crank arms to prevent their being forced together under the pressure of the lathe centres.

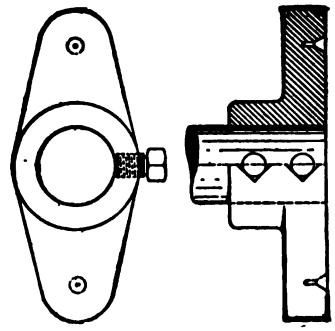

FIG. 116.—SIMPLE CRANK TURNING FIXTURE.

A crankshaft turning lathe is illustrated in Fig. 117. The crankshaft is clamped in clamping fixtures by means of swinging caps, and is held in the proper angular position by a sliding Vee carried on the fixture secured to the head stock. When one set of pins has been machined, a portion of the fixture can be swung through a half circle in order to bring the other set of crank pins in line with the lathe centre. The tool at the front of the lathe carriage is used for turning the cylin-

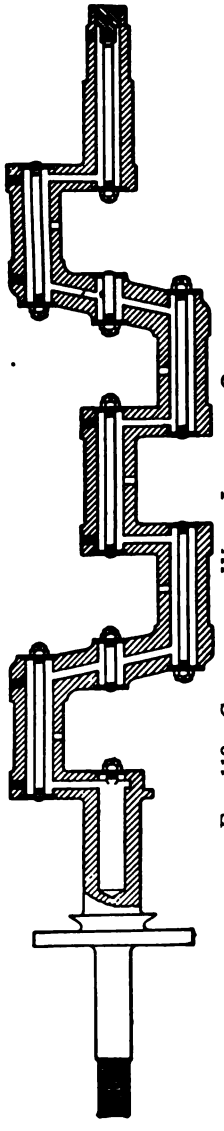

FIG. 119.—CRANKSHAFT WITH INTERNAL OILWAYS.

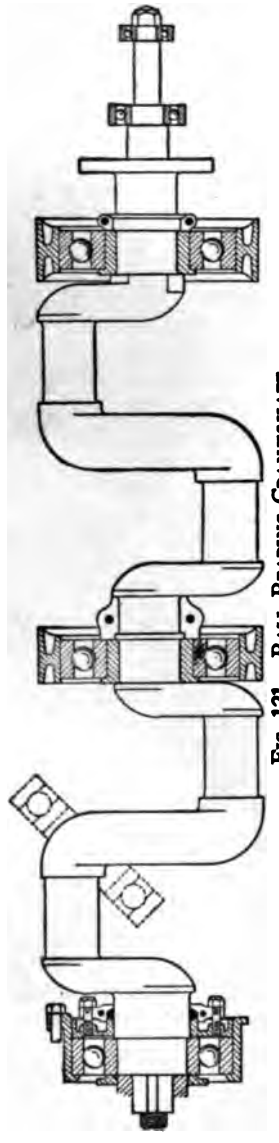

FIG. 121.—BALL BEARING CRANKSHAFT.

radial holes drilled half way through the outer journals, which register once during every revolution with holes in the crank bushings and bearing hubs, to which oil is being fed by a pump. The oil travels through the horizontal passage in the crank journals under the head produced by the oil pump, and is carried out into the crank pins by centrifugal force. The crank pins are also drilled with radial holes at their middle, through which the oil flows to the bearing surface. A few makers take advantage of the centrifugal force to feed oil from the crank pin to the piston pin bearing by connecting the lower connecting rod bearing with the upper by means of a tube running either through or alongside of the connecting rod. Some designers object to drilling of the shaft as here shown because the radial hole at the centre of the crank pin materially reduces the strength of the shaft. This objection is overcome by drilling diagonal holes through the crank arms from the journal to the crank pin, as shown in Fig. 120.

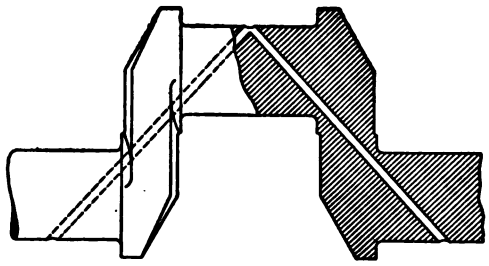

FIG. 120.—CRANKSHAFT DRILLED DIAGONALLY.

Ball Bearing Crankshafts—Although the great majority of crankshafts are provided with plain or parallel journal bearings, the so-called radial type of ball bearing has been used to some extent—especially in racing engines. Perhaps the principal advantage of the radial ball bearing for this purpose is that it permits of reducing the over-all length of the motor, and since this is one of the main objects aimed at in *en bloc* cylinder construction, and the use of four throw, two bearing crankshafts, the ball bearing falls right in line with this class of design. One further advantage of ball bearings on crank shafts is that they

reduce the friction loss. Of course, ball bearings are not at the same advantage in a place where the load varies between wide limits as where it is fairly uniform, and bearings of relatively large size must be chosen in order to secure satisfactory results.

In applying ball bearings to crankshafts which have journals between throws, some difficulty is encountered in getting the intermediate bearings into place. In order to avoid this difficulty some designers use ball bearings at the ends only, and plain bearings in the middle. Where ball bearings are to be applied throughout, the inner bearings must be chosen of such a bore that they can be stripped over the crank arms. To facilitate this process the ends of the crank arms are rounded off so that the bore of the bearings may be made smaller.

Practically all the radial ball bearings used in this country are imported, and are made to metric measurements. These bearings come with bores of the inner races in 5 millimeter gradations. For a four throw, three bearing crankshaft a ball bearing of a bore equal to the crank journal diameter will be big enough for the front end; a bearing that can be passed over the crank arms will be big enough for the central journal, and a bearing of the same size as this will do for the rear or flywheel end. This means, of course, that the intermediate and rear bearings have to be fitted to enlargements of the crank journals or to collars surrounding the journals, which latter, in the case of the intermediate bearing at least, have to be made in halves in order to get them into place.

These radial ball bearings are made in three different weights; that is, for a certain bore of inner race the bearings are made with three different sizes of balls and outer diameters. For the flywheel end, if the flywheel is secured by a key so the bearing need not be stripped over the crankshaft, it is advantageous to use the heavy type of ball bearing, in which case the crank journal need not be enlarged, or at least not much, at the bearing seat.

Fig. 121 is an illustration of the crankshaft of a four-cylinder motor, which is mounted in three radial ball bearings. This is a four-cylinder motor of 5⅜ inches bore and 5⅞ inches stroke. The front bearing is of the heavy type of 2.56 inches bore, while the intermediate and rear bearings are of the medium weight type, of 3.15 inches bore. The rated load capacity of each of these bearings is approximately 5,000 pounds.

Testing the Running Balance of Crankshafts—Fig. 122 shows a machine for testing the running balance of crankshafts

and other parts, made by the Norton Grinding Co., of Worcester, Mass. The crankshaft is rotated by means of an electric motor secured to the frame of the machine, while carried on yielding supports, and if it is not in running balance it will cause the supports to vibrate in the horizontal plane, the vibrations being indicated by means of long indicating hands.

Referring to the illustration, the machine consists of a stationary support with three upright, lengthwise adjustable

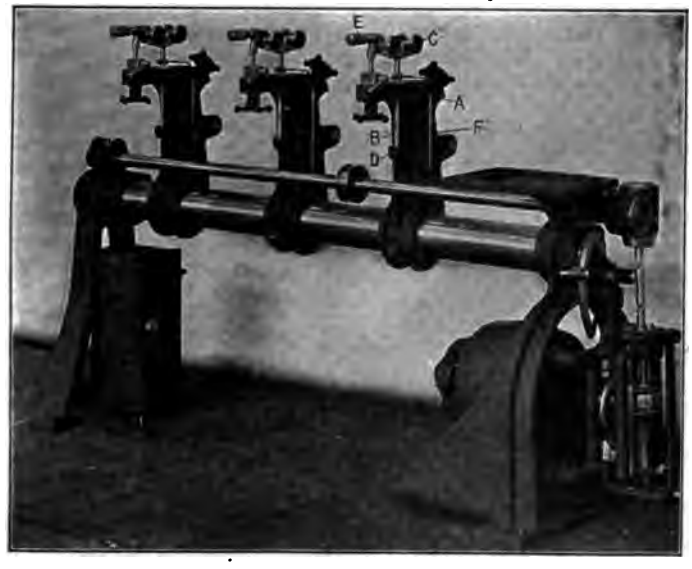

FIG. 122.—NORTON CRANKSHAFT BALANCING MACHINE.

columns *A* which carry vertical steel rods *B*, fitted at their top end with double pairs of rollers *C* each, on which the crankshaft may rest. The steel rods *B* are freely supported at their lower ends in brackets *D* with cup-shaped recesses, and are flexibly held near the top ends by means of rubber discs carried by the upright columns. This allows the top ends of the rods to move to and fro under the action of the centrifugal force on any unbalanced part of the crankshaft.

The crankshaft is driven by means of a belt from a horizontal shaft which receives its motion from the electric motor through an intermediate vertical shaft with universal

joints, a friction drive mechanism and a pair of helical gears. An adjustable scriber *E* is fixed to the top of each vertical column, and the top of each carrying rod *B* is connected to a long indicator hand *F* extending downward at the side of the column, so that the vibrations of the rod are multiplied and plainly indicated. In the use of the machine the crankshaft is rotated at a certain speed and the different scribers are advanced until they mark the shaft; then the scribers are slightly withdrawn, the direction of rotation is reversed and the scribers are again advanced until they mark the shaft. The part of the shaft midway between the two marks, circumferentially, is too heavy and should be lightened. A color roller is furnished with the machine, by means of which color is applied to the revolving journal to make the scriber marks plainer.

After the crankshaft has been properly balanced at moderate speed it can be tested at service speed. It is claimed that the indicating means is so sensitive that a proper balance can be obtained by running at low speed only, in case the crankshaft is not sufficiently stiff to permit of driving it at high speed without causing it to flex appreciably.

CHAPTER X.

THE CONNECTING ROD.

The connecting rod is the intermediate member between the crankshaft and the piston. It consists of the rod proper, the head or big end, which forms a bearing for the crank pin; and the small end, which forms a bearing for the piston pin.

Materials—Connecting rods are almost invariably drop forged from either low carbon (about 0.30%) or nickel steel. The former may be assumed to have a tensile strength of 70,000 pounds per square inch and the latter of 90,000 pounds per square inch. For heavier work they are occasionally cast of steel or manganese bronze.

Length of Rod—In determining the dimensions of the rod proper we have to consider first the necessary length, and, second, the necessary cross section. In speaking of the length of the connecting rod the distance between the centre of the piston pin bearing and the centre of the crank pin bearing is referred to. This length is generally expressed in terms of the stroke. In our discussion of the crank moment and of side thrust on the cylinder wall we assumed different values for the ratio between the length of the connecting rod and the length of stroke ranging between 1.75 and 2.5.

For a motor with offset cylinders and intended for a purpose where lightness is paramount, the smaller ratio can be chosen. In American pleasure car motors of the symmetrical type the ratio lies generally between 2 and 2.25. European designers not infrequently provide a connecting rod equal to 2.5 times the length of the stroke and this ratio can be recommended for commercial vehicle motors in which long life of the motor is more important than low weight.

A consideration that influences the length of the rod is that it must clear the bottom end of the cylinder bore when in its position of greatest angularity. The cylinder, crank and connecting rod are laid off on the drawing board, as shown in Fig.

123, with the connecting rod at right angles to the crank arm. If a certain length of connecting rod does not clear properly, a longer rod may be chosen and the layout worked over again. Sometimes when the shortest possible connecting rod is wanted the bottom end of the cylinder is formed with slots into which the connecting rod swings at the moments of its greatest angularity.

Calculation of Cross Section—The connecting rod works chiefly under compression, and must be treated as a column.

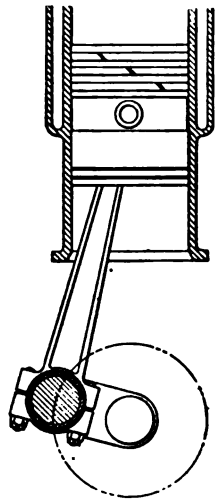

FIG. 123.

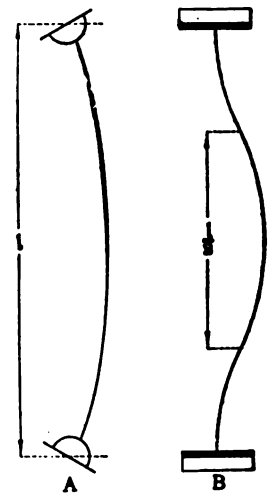

FIG. 124.

The most accepted formula for the strength of columns seems to be Rankine's, which is as follows:

$$\frac{P}{A} = \frac{S_c}{1 + q\frac{l^2}{r^2}} \quad \text{.....(82)}$$

where P is the total pressure on the column; A, the cross sectional area at the section of maximum stress; S_c, the working stress; l^2 the square of the length of the column; r^2 the square of the least radius of gyration and q a coefficient depending upon the condition of the ends of the column (whether fixed or free) and upon the material. The square of the least radius of gyration is found by dividing the moment of inertia of the section by its area. The left hand member of the equation evidently represents the compression per unit of area of the cross

section of the column. The term $q \frac{l^2}{r^2}$ in the denominator of the right hand member of the equation takes account of the additional stress due to the bending of a long column. When the length of the column is small in comparison with its cross section this factor is negligible, and the maximum stress is simply $\frac{P}{A}$.

In the discussion of columns with respect to their strength, a distinction is made between columns fixed at their ends and those free at their ends, the latter being not nearly as strong as the former, if the length is large in comparison with the cross section. Now, the connecting rod presents a case intermediate between a column with fixed ends and a column with free ends, since it is free at its ends in the plane of motion, and fixed that its ends perpendicular to the plane of motion. The result is that if bending occurs in the plane of motion it will be as shown on an exaggerated scale at *A* in Fig. 124, the entire length of the rod tending to form a simple curve concave to the normal centre line of the rod. If bending occurs at right angles to the plane of motion, the rod will assume a shape similar to that shown at *B*, Fig. 124. The end portions of the rod will form curves convex to the normal centre line, and the centre portion a curve concave to the normal centre line. At the points where the convex and concave portions join there is a neutral section at which there is no bending stress. The distance between these two inflection points is equal to one-half the total length of rod, and since the stress necessary to cause a certain bending strain varies as the square of the length of the curve, it follows that the bending moment due a certain pressure on the rod is four times as great in the plane of motion as normal to the plane of motion.

In a connecting rod we have, however, an additional moment tending to cause the rod to bend in the plane of motion which is not present in a stationary column—namely, the moment due to the transverse acceleration of the mass of the rod, or the whipping effect, as it is generally called. But at the instant when the greatest pressure acts on the connecting rod. the lower end of the rod moves transversely at a uniform speed, and the transverse accelerating force is zero. This effect may, therefore, be neglected.

The formula quoted above, viz.:

$$\frac{P}{A} = \frac{S_c}{1 + q\frac{l^2}{r^2}},$$

may be written

$$\frac{P}{A} + q\frac{l^2}{r^2}\frac{P}{A} = S_c \qquad (83)$$

which shows that the actual maximum stress on the fibres of the rod is made up of two items, the first, $\frac{P}{A}$, being that due to the compression of the rod and the second, $q\frac{l^2}{r^2}\frac{P}{A}$, being that due to the bending moments.

From a mass of practical data at hand the writer has calculated the proper values for q and for S_c in equation (83). The value of q is 0.000526, considering the square of the least radius

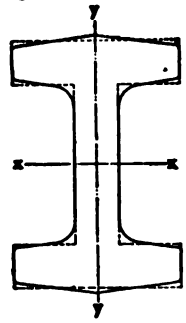

FIG. 125.

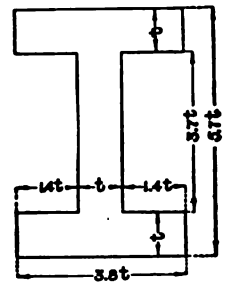

FIG. 126.

of gyration around the axis x-x, Fig. 125, and that of S_c, 18,000 in the case of carbon drop forge steel and 22,000 in the case of nickel steel, both steels being properly heat-treated.

Hence we may write

$$\frac{P}{A} + 0.000526\frac{P}{A}\frac{l^2}{r^2} = 18{,}000 \qquad (84)$$

for carbon steel and

$$\frac{P}{A} + 0.000526\frac{P}{A}\frac{l^2}{r^2} = 22{,}000 \qquad (85)$$

for nickel steel.

The section of the connecting rod is generally of I shape and the flanges must be given the usual draft. The writer has found it convenient, in calculating the dimensions of the section, to base the calculations on an equivalent section with web and flanges of uniform thickness, that is, without draft. An analysis of the sections in actual use shows that the average proportions are as follows: Calling the thickness of the web and the flange t, the width of the section is $3.8t$ and the height is $5.7t$. The height is

therefore, one and one-half times the width. The moment of inertia around the axis x-x (Fig. 126) is

$$I_x = \frac{3.8\,t\,(5.7\,t)^3 - 2.8\,t\,(3.7\,t)^3}{12} = 46.83\,t^4,$$

and the moment of inertia around the axis is $y-y$—

$$I_y = \frac{2\,t\,(3.8\,t)^3 + 3.7\,t\,(t^3)}{12} = 9.45\,t^4.$$

The area of the section is

$$(3.8\,t \times 5.7\,t) - (3.7\,t \times 2.8\,t) = 11.3\,t^2.$$

Since the square of the least radius of gyration around any axis is equal to the moment of inertia around that axis divided by the area of the section, we have for the square of the least radius of gyration around $x-x$

$$\frac{46.83\,t^4}{11.3\,t^2} = 4.14\,t^2$$

and the square of the least radius of gyration around $y-y$

$$\frac{9.45\,t^4}{11.3\,t^2} = 0.84\,t^2.$$

Having thus found expressions for A and r_x^2 in terms of t, we may substitute these values in equations (84) and (85) and solve for t. Equation (84) becomes

$$\frac{P}{11.3\,t^2} + 0.000526\,\frac{P}{11.3\,t^2}\,\frac{l^2}{4.14\,t^2} = 18{,}000$$

$$4.14\,P\,t^2 + 0.000526\,P\,l^2 = 842{,}076\,t^4$$

$$t^4 - 0.00000491\,P\,t^2 = 0.000000000625\,P\,l^2$$

$$t^2 - 0.00000245\,P = \sqrt{(0.00000245\,P)^2 + 0.000000000625\,P\,l^2}$$

$$= \sqrt{\sqrt{0.000{,}000{,}000{,}005\,P^2 + 0.000{,}000{,}000625\,P\,l^2} + 0.00000245\,P}$$

inches ..... (86)

This equation, which gives the necessary thickness of web and flanges for a section of a carbon drop forge steel connecting rod of length l and subjected to an explosion pressure P, is rather inconvenient to use on account of the big fractions involved, and for this reason Chart III has been drawn from which the proper value of t for any values of P and l can readily be determined. The chart permits of finding the proper section thickness for stresses between 14,000 and 24,000 pounds per square inch and even for stresses beyond these limits since stress and load are directly proportional. After the thickness has once

been found the width of the section can be found by multiplying the thickness by 3.8 and the height by multiplying the thickness by 5.7.

The section thus calculated is to be used at the middle of the length of the rod where at the moment of explosion the bending stress is the greatest. It is the usual custom to taper the rod, letting the height of the section decrease more or less rapidly from the head down to the small end. There is no apparent

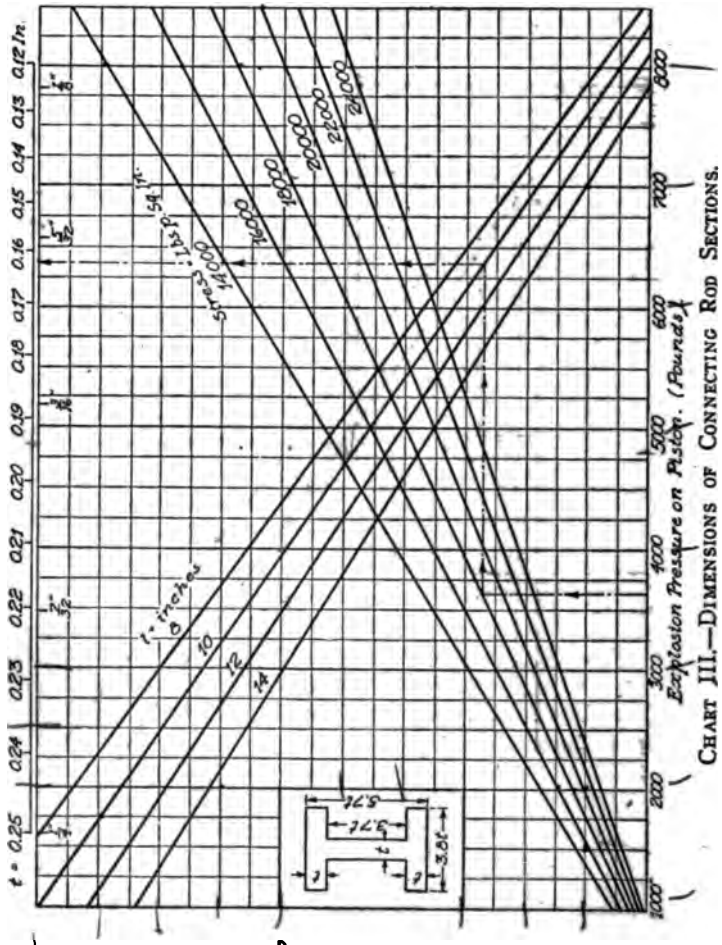

CHART III.—DIMENSIONS OF CONNECTING ROD SECTIONS.

reason why this should be done, since the maximum stress occurs midway between the ends. The theoretically correct way would be to make the section largest at the middle and taper it slightly toward the ends, but the gain would be so slight that it would not pay for the more complicated die. The writer considers a straight rod of uniform section from end to end the most practical form. But, as stated, the usual practice is to taper the rod from the head end down to the smaller or top end.

The form of cross section depicted in Fig. 125 and Chart III corresponds in proportions to the mean of modern practice. If it is desired to use an I section differently proportioned, it is, of course, quite permissible to do so, but the section modulus around either principal axis should be at least as great as that of the section found from Chart III for the particular explosion pressure P and length of rod l.

Tubular Connecting Rods.—Where the reciprocating parts must be of the lowest possible weight, as in racing and other high speed engines, the connecting rods are sometimes made tubular; that is, the shank is forged of solid round section and then drilled out from one end and turned off on the outside. Being machined all over, the section will be more nearly uniform than in a rough drop forging, and therefore a somewhat higher unit stress can be allowed. In some racing engines with tubular connecting rods of chrome-nickel steel, heat treated, the stress in the connecting rod shank was figured by the author to be in the neighborhood of 36,000 lbs. p. sq. in. Most designers of racing engines, however, keep well within this mark, and a stress of 24,000 lbs. p. sq. in. would seem to be a good average figure for the shank of a tubular connecting rod of heat treated alloy steel. The necessary diameters may then be calculated as follows: Suppose that the internal diameter is to be three-quarters the external diameter. Then the moment of inertia of the section

$$I = \frac{\pi\ [D^4 - (\tfrac{3}{4}\ D)^4]}{64} = 0.0335\ D^4.$$

and the area of the section

$$a = \frac{\pi}{4}\left(D^2 - \frac{9}{16}D^2\right) = 0.344\ D^2.$$

Hence the square of the least radius of gyration

$$r^2 = \frac{I}{a} = \frac{0.0335\ D^4}{0.344\ D^2} = 0.0974\ D^2.$$

Inserting in equation (83)

$$\frac{P}{0.344\ D^2} + 0.000526\ \frac{P}{0.344\ D^2} \times \frac{l^2}{0.0974\ D^2} = 24{,}000$$

$$0.0974\ P\ D^2 + 0.000526\ P\ l^2 = 804\ D^4$$

$$D^4 - 0.000121\ P\ D^2 = 0.000000654\ P\ l^2$$

$$D^2 - 0.0000605\ P = \sqrt{(0.0000605\ P)^2 + 0.000000654\ P\ l^2}$$

$$D = \sqrt{\sqrt{(0.0000605\ P)^2 + 0.000000654\ P\ l^2} + 0.0000605\ P}$$

$$= \sqrt{\sqrt{\left(\frac{P}{16{,}550}\right)^2 + \frac{P\ l^2}{1{,}530{,}000}} + \frac{P}{16{,}550}}$$

As an example let us take the case of a 3¾ x 6½-inch racing engine. The piston head area is 11.045 sq. in., and if we figure on a maximum explosion pressure of 400 lbs. p. sq. in., the pressure on the piston is

$$P = 4{,}418\ lbs.$$

Supposing the connecting rod to be 14 inches long between centres we get for the necessary outside diameter of the shank

$$D = \sqrt{\sqrt{\frac{4{,}418}{16{,}550}^2 + \frac{4{,}418 \times 196}{1{,}530{,}000}} + \frac{4{,}418}{16{,}550}} = 1.032\ inch.$$

The inside diameter should be three-fourths of this, or

$$\tfrac{3}{4} \times 1.032 = 0.774\ inch.$$

Round figures approximating the calculated values can then be chosen. A design of tubular rod is shown in Fig. 135 farther on.

Whipping Effect—It is of interest to investigate the "whipping effect" in a connecting rod, which has evidently a considerable influence on the stress in the rod when the piston is near mid-stroke. In Fig. 127, let A represent the momentary position of the crank pin axis and $B\ C$ the linear speed of the crank pin. If we call the number of revolutions per minute N, then the linear speed is

$$\frac{\pi\ r\ N}{30 \times 12}\ feet\ per\ second.$$

The linear speed can be resolved into two components, the vertical component $O\ B$ and the transverse component $O.\ C$. It is the latter component that interests us here. But

$$O\ C = B\ C \cos B\ C\ O = B\ C \cos B\ O\ A,$$

because $O\ A$ is perpendicular to $B\ C$ and $O\ B$ perpendicular to $O\ C$, hence angles $B\ C\ O$ and $B\ O\ A$ are identical. Substituting

the value of $O\ C$ and denoting angle $B\ O\ A$ by θ as in former discussions, we have for the transverse component of the crank pin velocity

$$v = \frac{\pi r N}{360} \cos \theta.$$

To find the transverse acceleration we differentiate this expression with respect to time, which gives

$$\frac{dv}{dt} = -\frac{\pi r N}{360} \sin \theta \frac{d\theta}{dt}.$$

But

$$\frac{d\theta}{dt} = \frac{\pi N}{30},$$

hence

acceleration $= \frac{\pi^2 N^2 r}{10{,}800} \sin \theta$ feet per second per second.

Now, it is only the shank portion of the rod that causes a whipping effect, since the two hubs are symmetrical around their journals and therefore balance around the supports, as it were. But we will not be far wrong in assuming that the rod extends from centre to centre of bearings. This will give a result slightly too large, so any calculation of dimensions based upon it will be on the safe side.

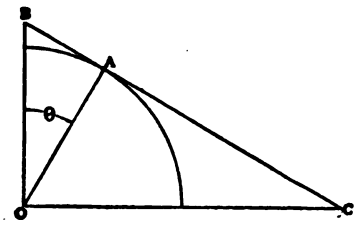

FIG. 127.

The above expression for the acceleration attains its maximum values when θ is 90 degrees and 270 degrees, when sin θ is equal to 1 and -1, respectively. The maximum values of the transverse acceleration are therefore

$$\pm \frac{\pi^2 N^2 r}{10{,}800}.$$

This is the maximum transverse acceleration of the lowest point of the connecting rod. The uppermost point of the rod has no transverse motion, and consequently no transverse acceleration. The maximum transverse acceleration of any intermediate point at a distance x from the upper end is

$$\frac{x}{l} a_m,$$

where l is the centre to centre length of the rod and a_m the maximum transverse acceleration of the lower end. Let s represent the cross sectional area of the rod, which we will consider to be constant from end to end. Then the weight of a small section $d\,x$ of the rod is

$$W = 0.26\ s\ d\ x \text{ pounds,}$$

and the acceleration force on it is

$$\frac{W\,a}{g} = \frac{0.26\,s\,d\,x \times \frac{x}{l}\,\frac{\pi^2 N^2 r}{10{,}800}}{32.16} = \frac{N^2\,r\,s\,x\,d\,x}{135{,}320\,l}$$

Integrating between the limits $x = 0$ and $x = l$, we have for the total force of acceleration

$$\frac{N^2\,r\,s\,l}{270{,}640}.$$

In applying this formula to a practical case it is well to give N the value corresponding to the extreme racing speed. This for a moderate speed 4x5 inch motor may be assumed to be 2,400 r. p. m. From Chart III and the equation for the area of the cross section we find that if we figure on the relatively low stress of 13,000 lbs. p. sq. in., the proper area for a rod 10 inches long and supporting and explosive force of 3,500 pounds is 0.35 square inch. The value of r is 2.5 inches and that of l, 10 inches. Hence we have for the force of transverse acceleration on the rod

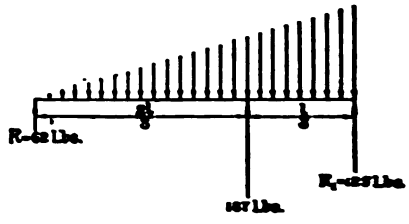

FIG. 128.

$$\frac{2{,}400 \times 2{,}400 \times 2.5 \times 0.35 \times 10}{270{,}640} = 187 \text{ pounds.}$$

When considered with respect to this force the rod obviously constitutes a simple beam subjected to a non-uniformly distributed load. The sum of the reactions at the supports is equal to the total pressure, viz., 187 pounds. Besides, the two reactions will bear to each other the same relation as if the rod was subjected to a concentrated load at the centre of gravity of the distributed load. In Fig. 128 the distributed load is represented by down-

wardly pointed arrows bearing against the base line which represents the length of the connecting rod. This distributed load can be balanced by a concentrated load of 187 pounds applied at a point one-third the length of the connecting rod from the lower end, since the distributed load is represented by a triangle, and the centre of gravity of a triangle is at one-third its height from the base line. But a reaction of 187 pounds at one-third the connecting rod length from the lower end is easily resolved into reactions of 125 pounds at the lower end, and 62 pounds at the upper end of the rod, as shown in the figure.

We must now find the maximum bending moment on the rod due to this distributed force of acceleration. Referring to Fig. 129, assume any point at a distance x from the upper support. The bending moment at this point is equal to the moment of the reaction at the left hand support around the point, minus the moment of that part of the distributed force to the left of this point, around the point. The moment of the reaction at the left hand support is evidently equal to $62x$. In order to find the moment of that portion of the distributed force to the left of the point, we take a section dy to the left of the point x. Since the total length of the rod is 10 inches the average pressure on it is $187 \div 10 = 18.7$ pounds per inch in length, and the maximum is twice this, or 37.4 pounds per inch. The pressure at a distance y from the left hand support is $\frac{37.4}{10} y$ pounds per inch in length, and the pressure on a short length dy at that distance from the left support is

$$37.4 \times \frac{y}{10} dy = 3.74 y\, dy.$$

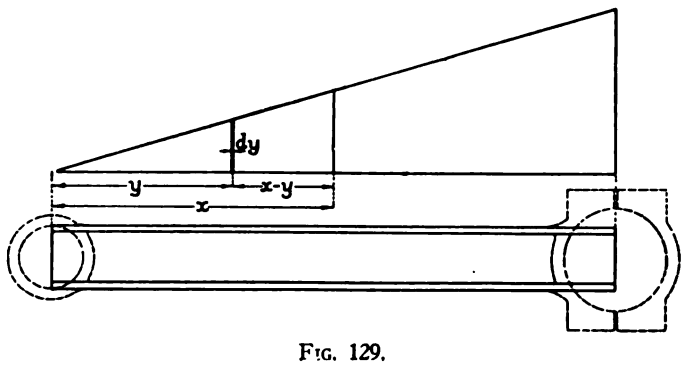

FIG. 129.

The moment of this force around a point at a distance x from the left hand support is

$$3.74\, y\, dy\, (x - y) =$$
$$3.74\, (x\, y\, dy - y^2\, dy)$$

Integrating between the limits $y = 0$ and $y = x$ we get the expression

$$\frac{3.74}{2} x^2 - \frac{3.74}{3} x^3 = 0.62\, x^3.$$

Hence the bending moment around a point at a distance x from the left hand support is

$$M = 62\ x - 0.62\ x^3.$$

In order to find the point where the bending moment is a maximum we place the first differential coefficient of the expression equal to zero—

$$62 - 3 \times 0.62\, x^2 = 0,$$

from which we find

$$x = 5.77 \textit{ inches.}$$

Inserting this value of x in the equation for the bending moment we have

$$M = (62 \times 5.77) - (0.62 \times 5.77^3) = 238.6 \textit{ pounds-inches.}$$

From Chart III we find the thickness t of a section proper for a connecting rod 10 inches long and subjected to an explosion pressure of 3,500 pounds if the stress is to be 13,000 lbs. p. sq. in. to be 0.185 inch, and since the moment of inertia around the principal axis perpendicular to the plane of motion is

$$I_x = 46.8\, t^4,$$

its value in this case is

$$46.8 \times 0.185^4 = 0.052.$$

The distance c of the outermost fibre from the neutral section is

$$\frac{5.7 \times 0.185}{2} = 0.527 \textit{ inch.}$$

Hence, since the stress

$$S = \frac{Mc}{I},$$

$$S = \frac{238.6 \times 0.527}{0.052} = 2{,}400 \textit{ pounds}$$

per square inch, approximately.

This stress must, of course, be added to that due to the compression on the rod. When the crank during the power stroke is in the quarter position the piston is 2.8 inches from the top end of the stroke (see Fig. 13), and the gas pressure in the cylinder then is 65 pounds per square inch (see Fig. 15). The total pressure on the 4-inch piston then is

$$12.56 \times 65 = 816 \textit{ pounds.}$$

Owing to the angularity of the connecting rod the pressure along the rod is greater in the proportion

$$\frac{\sqrt{4^2 + 1^2}}{4} = 1.031,$$

viz.,

$$1.031 \times 816 = 841 \textit{ pounds.}$$

The cross sectional area of the rod we found to be equal to 0.35 square inch, hence the unit stress due to the compression is

$$\frac{841}{0.35} = 2{,}400 \textit{ pounds per square inch approximately.}$$

The combined stress, therefore, is

$$2{,}400 + 2{,}400 = 4{,}800 \textit{ pounds per square inch}$$

which is very low compared with the 13,000 pounds per square inch to which the rod is subjected at the moment of explosion. This calculation shows that with steel I section connecting rods there is absolutely no danger from the whipping effect, even at the very highest speeds.

Piston Pin Bearing—The upper end of the connecting rod generally is a plain hub bored out to receive the bearing bushing. The outer end of the hub can be made equal in diameter to the piston bosses, or 1.5 times the diameter of the piston pin, the bushing being made of a thickness equal to one-eighth the piston pin diameter and the wall of the hub at the outer end the same. The hub is generally made one-eighth of an inch shorter than the distance between the piston bosses, so there will be no difficulty in assembling even if the cylinders should not be fitted to the crank case with absolute accuracy. If splash lubrication is used the bearing hub is provided with a sort of oil pocket to catch the oil which drips from the piston head, one or two holes being drilled through the bottom of the pocket and through the bushing, so that the oil can flow to the bearing surface.

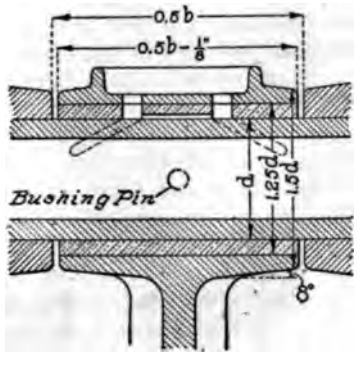

FIG. 130.

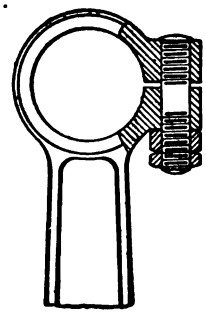

FIG. 131.

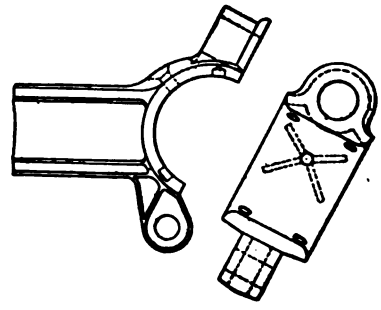

FIG. 132.

In order that the bushing may not turn in the hub, and thus the oil holes through the latter be closed up, it must be secured by a screw or pin. When the piston pins are lubricated by means of an oil tube leading up from the connecting rod head or through their bore, this oil pocket can be dispensed with. A typical design of connecting rod small end is shown in Fig. 130.

The bushing is generally made of phosphor bronze, though sometimes it is made of steel and hardened, in which case the wearing surfaces are hardened steel on hardened steel. It is forced into the bearing hub under pressure. Sometimes the piston pin bearing hub is provided with a lug and split, and a stud fitted with a nut and check nut is inserted, by means of which the bearing can be adjusted for wear (see Fig. 131).

Connecting Rod Head—The connecting rod head is made in halves, with a detachable cap and half bushings, so that the bearing can be adjusted for wear. In engines which have large inspection holes in the crank case the cap is sometimes hinged to the rod. A typical rod of this type, which has been used particularly on single and double cylinder motors, is illustrated in Fig. 132. The advantage of the hinged cap is that it can be more readily adjusted than a cap held on by two or four studs, it being only necessary to adjust a single screw. On the other hand, it seems that a bearing cannot be adjusted as accurately if provided with a hinged cap as if provided with a stud-retained cap. The hinged bearing is divided in a plane making an angle of 25 to 45 degrees with the cross section of the rod, to make the clamp bolt more accessible through the handhole in the side of the crank case.

When the connecting rods are drop forged the heads are forged

integral, and are later split by means of a saw so as to detach the caps. This facilitates the operation of boring out the heads. The heads are given the usual drop forging draft on the outside and are provided with bosses for the studs or bolts. Shims of thin sheet copper are placed between the connecting rod head and cap for purposes of adjustment.

The length and diameter of the conecting rod head bore are fixed by the dimensions of the crank pin and need not be discussed further. The thickness of the bushing can be made $d/10$, where d is the crank pin diameter, and the thickness of the hub wall at the outer ends the same, choosing the nearest size in thirty-seconds of an inch.

A number of designs of connecting rod heads are shown in Fig. 133. In the first of these, *A*, the cap is secured by two bolts with round heads, part of which is cut away so as to prevent the bolts from turning when the nuts are drawn up. The latter are secured in place by split pins. Design *B* is similar, except that cap screws are used instead of bolts and nuts. These cap screws must be locked by some means, as by a wire passed through the heads of both screws with its ends turned over, or by a brass strip under the heads, provided with lips at its ends which are turned up against the faces of the screw heads, thus holding it from rotating. The feature of the design shown at *C*

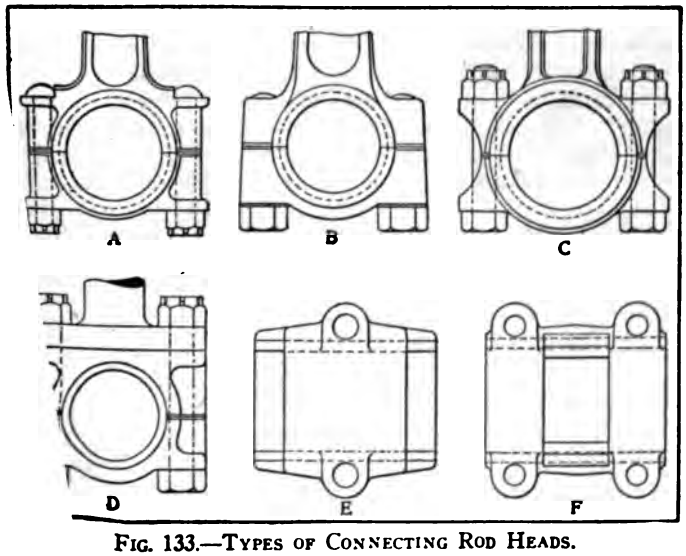

FIG. 133.—TYPES OF CONNECTING ROD HEADS.

is that the lugs for the cap bolts are lightened by removing some of the material by means of a milling cutter after the holes for the bolts have been drilled. At *D* is shown the so-called marine type of connecting rod head. In this design the rod proper is forged or cast with a T head, which is milled off to be fitted to the bronze crank pin box, which is cast in halves. This design is little used in automobile motors, but is extensively employed on marine motors, the rod being hand forged.

In the head shown at *E* the cap is made of less width than the other half, the idea being that weight can be saved in this way. since under ordinary conditions of operation the maximum pressure on the cap is much less than on the other half of the head. It is to be understood that the half bushing in the cap is also shorter than the other one. The same idea underlies design *F*, in which a portion at the middle of the cap, between the two sets of lugs, is cut away. Designs A, B and C are commonly used in automobile practice, while D, E and F are rare.

Crank Pin Bearings—The bushings for the connecting rod head are made in halves. They are cast in metal dies of some soft bearing or anti-friction metal (babbitt or white bronze). A softer metal is employed than for the piston pin bushing, because the unit pressure on the crank pin bearing is much smaller, and, besides, in the case of the crank pin it is essential that the wear be confined to the bushing as far as possible, because the renewal of a crankshaft means great expense, whereas a piston pin can be replaced cheaply. The bushings are often cast with integral pins or dowels which fit into drill holes on the inside of the connecting rod head, and are cast or cut with oil holes and with oil grooves, the latter usually of spider-foot form. Instead of spider-foot grooves, some manufacturers cut intersecting longitudinal and circumferential grooves in the head. At the ends the bushings have external flanges equal in width and height to their thickness. This subject is discussed further in Chapter XIII.

Size of Studs—Ordinarily the connecting rod cap is held in place by either two or four studs and nuts. The necessary diameter of these studs can be calculated as follows: The greatest strain will come upon the studs when the piston starts on the suction stroke while the motor runs at "racing" speed, say, 3,000 revolutions per minute in the case of a 3.5x5 inch motor. The force of acceleration then is (see page 44)

$$129.5 \times \frac{3{,}000^2}{1{,}800^2} = 3{,}600 \text{ lbs.}$$

In the calculation of this force only one-half the connecting rod weight is taken into account, the other half being considered to

have a rotary motion. This half, however, is subjected to centrifugal force, and at the moment when the inertia force on the reciprocating parts is a maximum the centrifugal force on the rotating part of the connecting rod is in the same direction as the inertia force, and should, therefore, be added to it. The weight of the connecting rod may be assumed to be 4 pounds, so that one-half of it is 2 pounds. The radius of rotation of this weight at the moment when the crank is in the top dead centre position is about 3 inches. Consequently the centrifugal force on this weight at 3,000 revolutions per minute would be (equation 31)

$$1.226 \times 2 \times \left(\frac{3{,}000}{60}\right)^2 \times \frac{3}{12} = 1{,}532 \textit{ pounds.}$$

The total force on the cap bolts, therefore, is

$$3{,}600 + 1{,}532 = 5{,}132 \textit{ pounds.}$$

Figuring on a load of 22,000 pounds per square inch, the necessary section of metal in each of two bolts is

$$\frac{5{,}132}{2 \times 22{,}000} = 0.117 \textit{ square inch.}$$

The size of screw with S. A. E. thread whose cross-section at the bottom of the thread is nearest to this is $\frac{1}{16}$ inch. In case four bolts or studs are to be used, each must have a section of 0.058 square inch at the bottom of the thread. A $\frac{1}{16}$ inch screw with S. A. E. thread has nearly this section, but a $\frac{3}{8}$ inch stud would probably be used owing to the danger of injuring the smaller thread by a too powerful application of the wrench. A good deal of trouble has been experienced with the connecting rod cap bolts since the high speed motor was first taken up, as the strains on these bolts were not fully realized at first. Nickel steel bolts are now largely used for this purpose. Four bolts evidently offer an advantage over two bolts, but their use involves difficulties in construction, as it is impossible to form two separate lugs on each side of a drop forged connecting rod head except by machining.

Offset Connecting Rods—With the object of producing a motor of the greatest possible compactness, and yet providing liberal bearing surfaces, many American designers offset their connecting rods, as shown on an exaggerated scale in Fig. 134. The following consideration shows that nothing is gained by this proceeding. The resultant of the distributed pressure on the piston pin bearing must be equal to and in line with the resultant of the pressure at the crank pin bearing. Let us con-

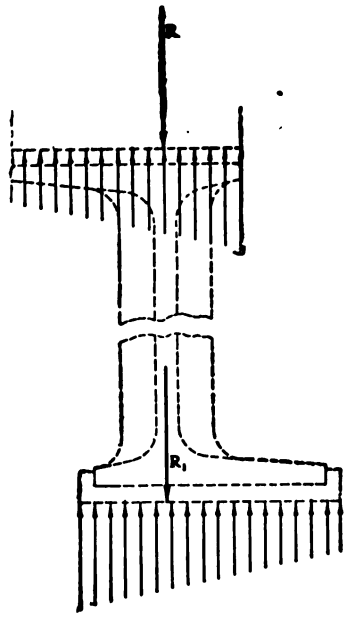

FIG. 134.

sider the two bearings equally offset from the rod in opposite directions. Then the resultants of the pressures at the bearing surfaces will be represented by R. These forces, it will be noted, are to one side of the centres of the bearings, and we found in the discussion of the side thrust of pistons that when a bearing surface is thus unsymmetrically loaded the pressure is unevenly distributed over the surface. The unit pressure at the end farthest away from the point where the resultant takes effect is to the unit pressure at the opposite end as the distance of the nearest end from the resultant is to the distance of the farther end. Suppose, for instance, that in Fig. 134 the two bearings are of equal length, and that the two "overhanging" portions of the bearings are equal to one-third the length of the bearing each; then the location of the resultant will be one-third the length from one end of the bearing and the unit pressure will be twice as great at the nearer end as at the farther end. Calling the average unit pressure p, the unit pressure at the nearer end will be $\frac{4p}{3}$. The wear at the near end will, of course, be proportional to $\frac{4p}{3}$, or 33 per cent. greater than if the bearings were of the same size and in line. Now, if the overhanging portions were left off the unit pressure would be uniform, $\frac{3p}{2}$ throughout the length of the bearing, or only about 13 per cent. greater than with this big offset. In an offset rod the bearings will wear more rapidly at one end than at the other, and will then subject the connecting rod to additional bending strain, and cause side thrust on the crankshaft and cylinder wall.

The connecting rod cap is generally fitted with a "spoon" or quill, which dips into the oil at the bottom of the crank case once during every revolution and projects it over the inner wall of the crank case, cylinder and piston (Fig. 136). If no such dipper were provided it would be necessary to carry the oil level at such a height that the cap itself would dip into the oil, and this, at high motor speeds, would be sure to splurge the oil entirely too much, causing the motor to smoke and the oil to be wasted. When it is considered that the cylinder of a 4x5 inch motor requires much less than a drop of oil per revolution, it will be realized that the part dipping into the oil can be made very small.

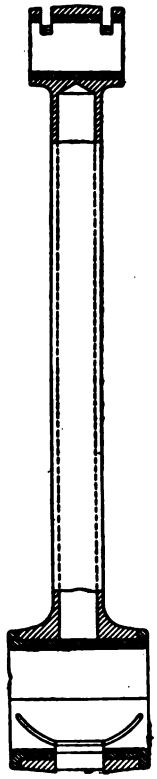

FIG. 135.—TUBULAR CONNECTING ROD.

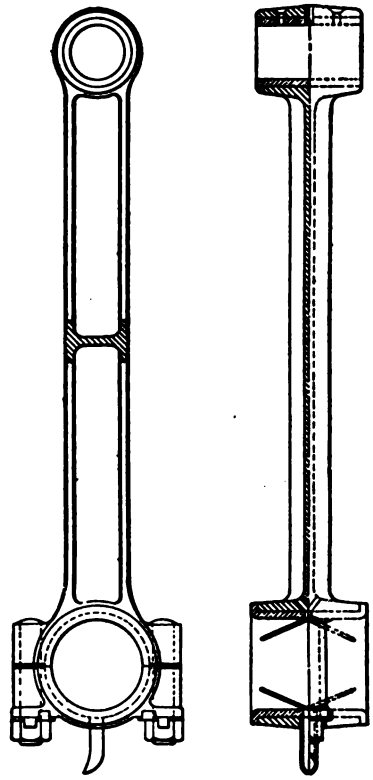

FIG. 136.—TYPICAL DESIGN OF I SECTION CONNECTING ROD.

When splash lubrication is depended on for the rod, two slanting holes are drilled through the top half of the head, as shown in Fig. 136, through which any oil running down the connecting rod sides may reach the crank pin bearing surface.

Forked Connecting Rods for V Engines.—In all V motors the connecting rods of two oppositely located cylinders are secured to the same crank pin. There are three possible arrangements. Either the two connecting rod heads may be located on the crank pin side by side, or one rod may be forked and have its bearing on the outside of the other rod which is fitted to the crank pin; or one rod, known as the master rod, may have a bearing on the crank pin and be

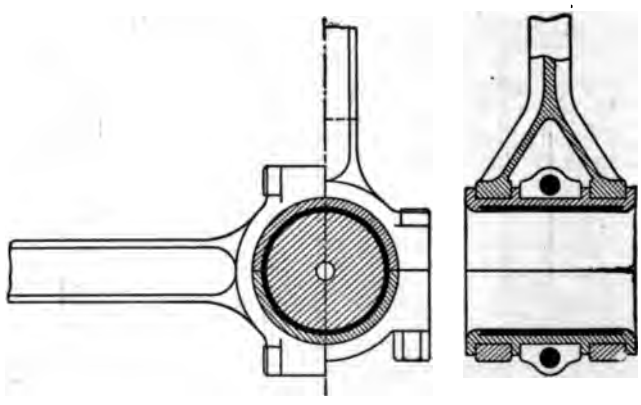

FIG. 137.—YOKED CONNECTING RODS FOR V ENGINES.

provided with a lug to which another, shorter rod is pivoted. At present the side-by-side arrangement is used in the greatest number of models, though the forked arrangement also enjoys a fair share of popularity. One objection to the latter is that, as ordinarily constructed, it cannot be taken up for wear. Undoubtedly the weight of the two connecting rod heads and hence the centrifugal force on them is greater than where the two heads are side by side. The bearing bushing is made in halves, and the end of the forked connecting rod is securely clamped to the bushing. The other connecting rod has its bearing on the bushing between the two prongs of the forked rod, as shown in Fig. 137. It will be readily seen that if the bearing were taken up on account of wear

at the crank pin surface, the outside of the bushing would be too small to fit the bearing of the plain connecting rod. Fortunately the pressures on the individual connecting rods in a V engine are relatively small, and it is possible to keep down the unit pressures on the crankpin bearing to a low figure. There is very little wear on the bearing of the plain rod, as the bushing does not revolve in this bearing, but merely rocks back and forth in it through a small angle.

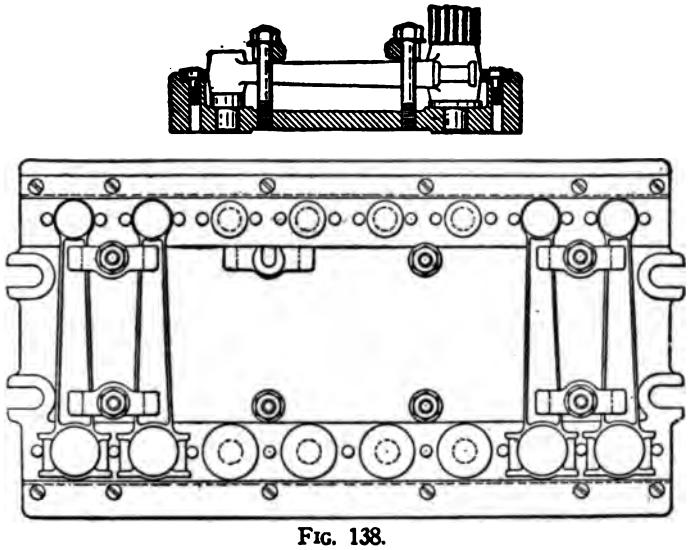

FIG. 138.

Manufacture of Rods—In the machining of the rods the greatest care must be taken to get the holes at the two ends parallel with each other. On a rod of the design herewith illustrated there are five successive machining operations, and a set of jigs and fixtures for performing these operations was described by Robert G. Pilkington in THE HORSELESS AGE of November 25, 1908, whose drawings are herewith reproduced. The five successive operations are as follows:

1. Milling sides of ends (one fixture).
2. Drilling and reaming crank and piston pin fits (in jigs).
3. Straddle milling bolt and nut surfaces on head (one fixture).
4. Drilling and reaming small holes (one jig).
5. Cutting off cap (No. 3 fixture).

Fig. 138 shows a fixture for holding the rods while the sides of the ends are being milled off. It is arranged to carry eight pieces. In filling the fixture the first time after setting up, pieces are put in the odd numbered positions and a "dummy" in the even numbers. The fixture is placed in a milling machine with two adjustable vertical spindles, which are set to take off the required amount, and a cut is taken. Before reversing the feed, No. 1 rod is turned over and put in No. 2 position, No. 3 in No. 4, and so on. The hardened pads in the even numbered positions are

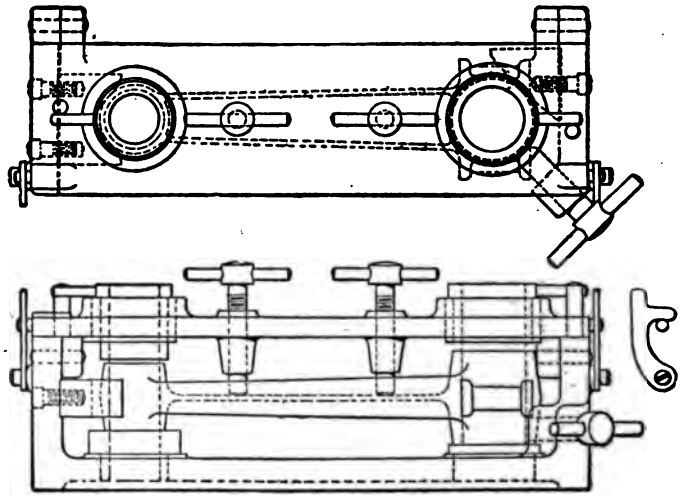

FIG. 139.

just enough higher than those in the odd numbered ones to leave the work of the required size. After clamping down and running under the cutters a second time the rods on the even numbered positions are finished. Odd numbered positions are again filled with rough work. All pins and pads which locate the work are of hardened tool steel. The clamps are made to bear on the web of the rod, not on the flanges.

A multiple spindle drill of at least four spindles is required for drilling and reaming the crank and piston pin holes. Fig. 139 shows a box jig for this purpose. The usual slip bushings for drill and reamer are provided for each end. In putting the work into the jig it is laid on the lower bushings and the lid is brought

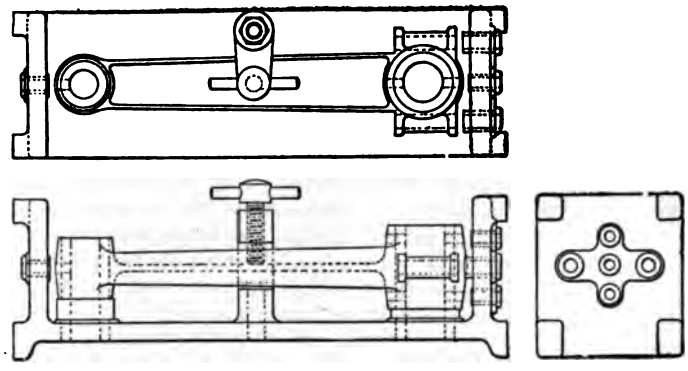

FIG. 140.

down and clamped by the cam hooks, one of which is shown at the right. The holding screws in the lid are then brought down lightly, followed by bringing up tight on the locating screw at the right. This forces the piston end of the rod into its V block and the crank end over against the 45 degree surface of its block. The work-holding screws are then brought down tight.

The jig in Fig. 140 locates two holes for the cap bolts, an oil hole in each end and four dowel holes for the babbitt liners. The large locating pins are made hollow, which makes it very easy to clean all chips and lubricant from the jig with the air jet. The two upper dowel holes in the head are located positively by the holes in the locating pin serving instead of drill bushings.

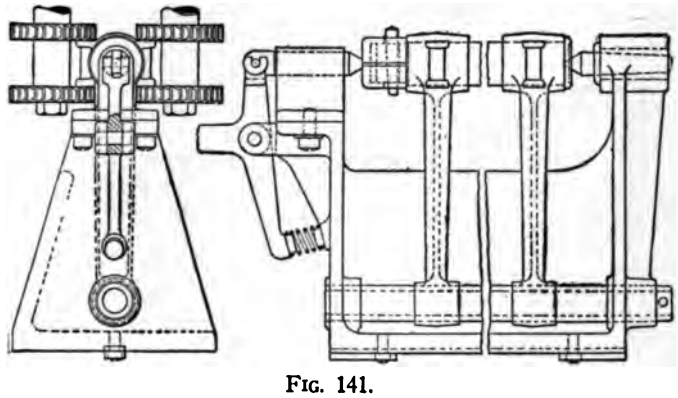

FIG. 141.

The holding screw with the T head swings on the pivot indicated by the nut, and allows the work to be lifted out.

The fixture shown in Fig. 141 serves to hold the rods for operations 3 and 5. None of the pressure of the cut is intended to be taken by the spring pressed live centre, the side pressure being neutralized by the use of opposing cutters. In setting up the work four pieces are placed on the arbor, the cap is put on the end and the key dropped in place. After placing on the centres the locating pin is pushed through the lower ends and the key in the arbor cap is tapped in place, clamping the work firmly. Exactly the same procedure is carried on in the fifth operation, with the difference that thin slitting cutters are used.

CHAPTER XI.

VALVES AND VALVE GEARS.

The modern standard automobile motor works on the four cycle principle, as explained in the chapter on "The Otto Cycle," and is fitted with mechanically operated poppet valves for both the inlet and the exhaust. A poppet valve consists of a disc of metal, with a stem on one side coaxial with the disc, which closes a circular opening in a partition wall between two chambers, against which wall it is drawn by a spring. To open the valve a force has to be applied to it contrary to the direction of spring pressure, strong enough to overcome the spring. Formerly the inlet valves were generally actuated by the suction prevailing in the cylinder during the inlet stroke, such valves being called automatic or suction valves. A typical valve of this kind with its cage is illustrated in Fig. 142. It will be understood that, since the valve opens toward the cylinder, when the piston moves down on the inlet stroke and the pressure in the cylinder drops below atmospheric, the excess pressure of the atmosphere against the outer face of the valve head overcomes the pressure of the light valve spring, and the valve opens. Toward the end of the inlet stroke the excess pressure of the atmosphere diminishes and the spring then closes the valve.

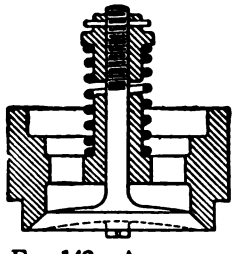

FIG. 142.—AUTOMATIC INLET VALVE WITH CAGE.

Since automatic inlet valves are no longer used on automobile motors, except in rare instances, it is not necessary to go extensively into their theory, but it may be well to point out some of the disadvantages which led to their abandonment in favor of mechanically operated valves. When the motor is pulled down in speed by a heavy load the automatic valve will close as

soon as the suction force decreases to the point where it is equaled by the force of the valve spring; that is, before the end of the suction stroke, and the cylinder receives an incomplete charge. The valve will not remain open under less than a certain suction, and the motor, therefore, cannot be throttled down as much as a motor with mechanically operated valves. In other words, it is less flexible. The automatic inlet valve has a tendency to stick to its seat, owing to the gumming effect of the gasoline, and to produce noise by "fluttering" and by "wire-drawing" the charge.

Angle of Seat—The poppet valve consists of two parts, the head and the stem. That portion of the head which when the valve is closed rests on a machined portion of the cylinder casting is known as the seat. This surface usually forms a truncated cone whose generatrices make an angle of 45 degrees with the plane of the valve head. Sometimes, however, the valve seat is a plane surface perpendicular to the valve axis, and, again, the seat is a truncated conical surface of less than 45 degrees inclination. Flat seated valves are used by the Daimler Motor Company, of Cannstadt, Germany, in their Mercedes motors, by the Knox Automobile Company, of Springfield, Mass., and by a few others, but the great majority of makers use 45 degree conical valves. The advantage of the flat seated valve is that for a certain area of opening at the seat it does not need to be lifted as high as a conical valve. It can, therefore, attain its maximum opening quicker and retain it longer, and since the amount of travel in closing is less, it should operate more quietly. The conical valve, on the other hand, has the advantage that it is self-centering. The two types are shown in Figs. 143 and 144, respectively.

In Fig. 143 let d ($= B\,B'$) be the clear diameter of the valve or the diameter of the bore of the valve seat, and h ($= B\,D$) be the lift. Also, let θ be the angle of the valve seat. It is required to find the effective area of opening corresponding to any lift h. Referring to the figure, the minimum area of cross-section is evidently a truncated conical surface, of which $B\,C$ is a generatrix. Now,

$$B\,C = B\,D \cos C\,B\,D = h \cos \theta.$$

Also

$$C\,E = B\,C \cos B\,C\,E = B\,C \sin C\,B\,E = h \cos \theta \sin \theta.$$

Hence the diameter $C\,C'$ is

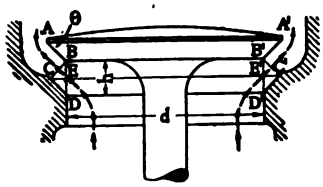

FIG. 143.

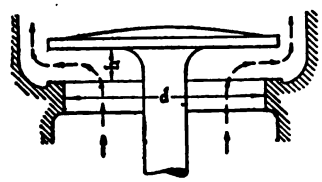

FIG. 144.

$$d + 2\,h \cos\theta \sin\theta.$$

The area of the truncated conical surface is

$$\pi \frac{CC' + BB'}{2} \times BC =$$

$$\pi\,(d + h \cos\theta \sin\theta)\,h \cos\theta =$$

$$\pi\,(d\,h \cos\theta + h^2 \cos^2\theta \sin\theta) \quad \ldots\ldots\ldots\ldots \quad (87)$$

In case $\theta = 45$ degrees the expression for the area becomes

$$A = \pi\,(0.707\,d\,h + 0.353\,h^2) \quad \ldots\ldots\ldots\ldots \quad (88)$$

It will readily be seen by reference to Fig. 144 that in the case of a flat seated valve the area of opening is $\pi d\,h$. Hence, calling the lift of the flat valve h_f and that of the 45 degree valve h_{45} the two lifts must be so related that

$$0.707\,d\,h_{45} + 0.353\,h^2_{45} = d\,h_f,$$

from which it follows that

$$h_f = 0.707\,h_{45} + 0.353\,\frac{h_{45}}{d}.$$

If the lift of the 45 degree valve is one-fifth the clear diameter, then

$$h_f = 0.778\,h_{45}$$

or roughly four-fifths of h_{45}.

It would be desirable in one respect to have the passage around the valve when fully lifted about equal to the area of the valve port. The full area of the valve port is $0.7854\,d^2$, but the stem will reduce this to $0.74\,d^2$. Hence

$$3.14\,(0.707\,d\,h + 0.353\,h^2) = 0.74\,d^2,$$

$$2.22\,d\,h + 1.11\,h^2 = 0.74\,d^2;$$

which when solved gives

$$h = 0.29\,d.$$

In practice, however, the lift is always made less than this, owing to the difficulty of making the valve action sufficiently quiet with high lifts. There is also a noticeable tendency to make the lift of small valves proportionately greater than that of large valves. A good rule is to make the lift

$$h = \frac{d}{8} + \tfrac{1}{8} \text{ inch} \quad \ldots\ldots\ldots\ldots \quad (89)$$

Material of Valves—The heads of the valves are subjected to the high temperature of the burning gases, and it is essential that they should not warp under the influence of the heat, and that their seats should not burn or oxidize, as in either case they will become leaky. Pure nickel is sometimes used on account of its non-oxidizing qualities. A more common material for valve heads is high percentage (30-36 per cent.) nickel steel, which has an exceedingly low co-efficient of heat expansion, hence does not warp. Recently tungsten steel (high speed tool steel) has come into extensive use, and valves of it are said to be non-pitting, because of their extreme hardness. The stems of the valves are preferably made of carbon steel, which is harder than the high percentage nickel steel, and therefore stands the shocks better, and it is also considerably cheaper. Poppet valves with high percentage nickel steel heads electrically welded to carbon steel stems are at present very widely used. Valves with cast iron heads screwed and riveted to carbon steel stems are also used to some extent. The bottom ends of the stems should be case hardened (which is conveniently done in cyanide of potassium), so that they will not wear or become deformed under the shocks of the push rods.

Form and Dimensions of Head—The valve head should be made of the minimum thickness that will insure against deformation, and to this end it is sometimes made dome shaped. In American practice the head is made flat on the under side and rounded on top, so as to give increased strength at the centre, where the bending moment due to the explosion is the greatest. The principal dimension of the valve head is the bottom diameter d, which should be equal to the clear diameter of the valve port. All the other dimensions of the head may be expressed in terms of d as follows (for 45 degree valves):

Outside diameter of head $= 1.15\ d$.

Thickness at centre of head $= 0.15\ d$.

Valve stem diameter $= 0.15\ d + 0.15$ inch.

Radius of fillet at junction of head and stem $= 0.2\ d$.

The above ratio between the bottom and top diameters of the valve head gives a seat on the head about $0.10\ d$ in width, and the projection of this width on the horizontal plane is $0.07\ d$. The latter should be the same for valves with other seat angles. The width of the seat formed in the cylinder casting must be somewhat less, so there will be no interference between the outer edge of the valve and the seat in the casting after repeated grindings. European designers sometimes provide an exceedingly large fillet between the valve head and the stem, of a radius equal to and even greater than the overhang of the head, to deflect the col-

umn of gas and thus lessen the resistance of the valve passage, and make the upper surface of the head flat, as shown in Fig. 145. They also often make the upper portion of the stem slightly less in diameter than that portion working in the guide, so that there is no possibility of a shoulder being formed where the stem leaves the guide when the valve is in the closed position. This is also shown in Fig. 145.

If the head is made of cast iron it is provided with a sort of hub on the under side and is screwed over the reduced upper end of the stem against a shoulder, and the end of the stem is then riveted over, as shown in Fig. 146. All valves must have a screw-driver slot milled in the head for the grinding tool.

Mean Gas Speed Through Valves—In calculating the dimensions of valves, the calculations are often based upon a certain mean gas speed through the valve port in feet per minute. It is obvious that the mean gas speed through the

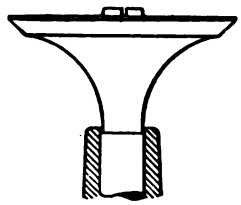

FIG. 145—EUROPEAN DESIGN POPPET VALVE.

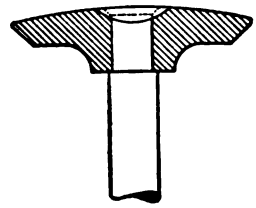

FIG. 146.—CAST IRON HEAD POPPET VALVE.

valve port is to the mean piston speed as the piston head to the valve port area. But since the piston head area is proportional to the square of the bore and the valve port area to the square of the clear valve diameter, the mean gas velocity through the valve port is to the mean piston speed as the square of the bore is to the square of the clear valve diameter—

$$v_v : v_p = b^2 : d^2,$$

Hence

$$v_v = v_p \left(\frac{b}{d}\right)^2 \quad \text{.....} (90)$$

In modern engines v_v has a value of 7,000 to 9,000 feet per minute when the engine runs at its speed of maximum output, the former figure applying to truck engines and the latter to high speed engines.

A committee appointed in 1910 by the (British) Institution of Automobile Engineers to develop a rating formula for

gasoline motors, in its report suggests the following formula for the clear diameter of the inlet valve:

$$d = 0.29\, b \sqrt[4]{\frac{b^2 l}{m}},$$

where b and l have their usual meanings and m is the weight of the reciprocating parts (piston and connecting rod). The idea underlying this recommendation is that a motor will be able to run at a higher piston speed the greater the length of stroke l and the less the weight m of the reciprocating parts, hence the valve diameter should increase with the former and as the latter decreases. It is admitted, however, that this formula in the majority of cases gives valve diameters greater than actually employed in practice.

Degree of Filling—A gasoline engine cylinder in normal operation never draws as much charge per suction stroke as is represented by the piston displacement volume at atmospheric pressure and temperature. This latter amount is referred to as a complete charge. The ratio of the amount of air actually taken in per suction stroke to a complete charge is known as the volumetric efficiency. This factor decreases as the speed of the motor increases, increases and decreases with the size of the inlet valves, and varies also with the valve timing and the cylinder wall temperature. Some tests made on a Franklin four cylinder, 4x4 inch air cooled motor at Cornell University, and reported in a paper read by Prof. R. C. Carpenter before the Society of Automobile Engineers at New York in January, 1911, showed that this motor, fitted with poppet valves of a clear diameter of 1⅜ inches, opening 5 degrees past dead centre and closing 30 degrees past dead centre, had a volumetric efficiency when cold (that is, when driven by an electric motor) of 82 per cent. at 1,000 r. p. m. and 68 per cent. at 1,500 r. p. m. When run under its own power, with the inlet valves opening 5 degrees past dead centre and closing 30 degrees past dead centre, the volumtric efficiency was 68 per cent. with applied phosphor bronze cooling fins and 62 per cent. with cast iron integral cooling fins at 1,000 r. p. m.; 63 per cent. with applied phosphor bronze and 56 per cent. with integral cast iron cooling fins at 1,500 revolutions per minute. This clearly shows the effect of the cylinder wall temperature on the volumetric efficiency, the applied phosphor bronze fins evidently cooling less than the integral cast iron fins. The effect of valve timing on the volumetric efficiency is shown by the following figures: With cast iron integral fins but with the inlet valves opening 7 degrees

before dead centre and closing 17 degrees past dead centre the volumetric efficiency was 45 per cent. at 1,000 revolutions and 47 per cent. at 1,500 revolutions. Curves plotted to show the variation of the volumetric efficiency with the speed of the engine bring out the interesting fact that whereas in the cold engine the volumetric efficiency decreases practically uniformly as the engine speed increases, in the hot engine it decreases rapidly at first, then less rapidly and becomes constant or begins to increase at from 1,300 to 1,400 revolutions per minute. The probable explanation of this difference in the variation of the volumetric efficiencies of hot and cold engines is that at high rotative speeds the incoming gases do not have sufficient time to absorb much heat from the cylinder wall, hence the difference in the efficiencies of hot and cold cylinders is then less.

Valve Guides—Sometimes the guides for the valve stems are cast integral with the cylinders, but more frequently they are inserted. Casting them integral is the least expensive construction, but it is open to the objection that owing to the unavoidable inaccuracies in molding, the holes through the guides are frequently considerably out of centre, and, besides, when the guide has become worn it is very difficult to refit it so as to make a fairly tight joint, which is essential particularly in connection with the inlet valve. Since it is impossible to properly lubricate the exhaust valve guides, wear on these is comparatively rapid.

The methods of inserting the guides differ considerably. Formerly it was customary to provide them with a screw thread and screw them into the cylinder casting, as shown at *A*, Fig. 147. This is objectionable, however, since it is difficult to get the thread on the guide absolutely concentric with the hole through it, and if the guide should ever be removed, and in replacing not be turned to exactly the same angle, the hole through it would not be concentric with the valve seat. It is therefore preferable to clamp the guide into the cylinder casting by means of a flange on it and a nut, as shown at *B*, or to force it into the casting under pressure and hold it in position by one or two flat head machine screws, as shown at *D*. The screws can even be dispensed with, since the valve spring pressing against the flange of the guide will hold it in its place in the cylinder casting, but the screws will prevent it from turning. Instead of inserting the guides from below, they may be inserted into the cylinder casting from above, as shown at *C*. In this case the valve spring bears against a seat formed on the cylinder casting, and the guide is held in place by friction and by its weight.

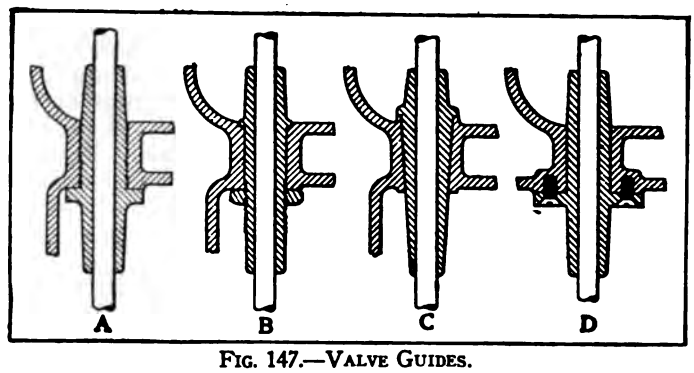

FIG. 147.—VALVE GUIDES.

The mean diameter of the guides is made about twice the diameter of the valve stems, and the length is made 1¾ to 3 times the clear diameter of the valve, the former figure being used where overhead valves or similar constructions limit the available space.

Valve Timing—The valves are operated by cams on a shaft which turns at one-half the speed of the crankshaft, so that each valve is opened and closed once during two revolutions of the crankshaft. For operation at very low speed the inlet valve should begin to open and should close at the beginning and end of the inlet stroke, respectively, and the exhaust valve should open a trifle before the end of the power stroke and close at the end of the exhaust stroke. However, in order that the motor may operate satisfactorily at high speed, it is necessary to alter the valve periods considerably. The exhaust valve must open earlier and close later, and the inlet valve must open later (in order not to overlap the exhaust opening) and close later. The respective lags and leads should be greater in proportion as the motor is intended to run at higher rotary speed. For a motor intended for service at normal speed, say a 3.5x5 inch motor to run at 1,800 revolutions per minute, the following valve timing would be suitable:

Exhause opens 45 degrees ahead of bottom dead centre.

Exhaust closes 10 degrees past top dead centre.

Inlet opens 15 degrees past top dead centre.

Inlet closes 30 degrees past bottom dead centre.

In motors intended to run at very high speed, and consequently provided with valves of very large diameters, the timing may be made as follows:

Exhaust opens 50 degrees ahead of bottom dead centre.

Exhaust closes 10 degrees past top dead centre.

Inlet opens 15 degrees past top dead centre.

Inlet closes 45 degrees past bottom dead centre.

The first mentioned timing system is illustrated diagrammatically in Fig. 148.

It should be pointed out that if a motor is timed to give the very best output at high speeds it will not run so satisfactorily at low speed, and will not be as flexible. This is due to the fact that when the exhaust valve opens very early, some of the power otherwise available at low speed is lost through the exhaust, and when the inlet valve closes very late some of the charge drawn in dur-

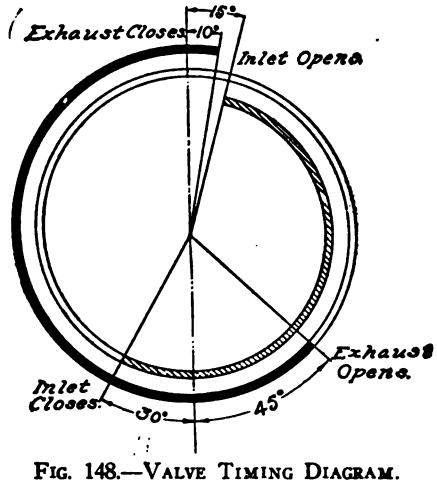

FIG. 148.—VALVE TIMING DIAGRAM.

ing the suction stroke will be forced out again during the beginning of the compression stroke. The cylinder, therefore, will not receive a full charge, and will not utilize to the fullest advantage the charge it does receive.

Influence of Inlet Valve Timing on Power and Fuel Efficiency—Some tests were made in 1909 at the Laboratory of the Automobile Club of France on a four cylinder Renault motor of 100 mm. bore and 140 mm. stroke, to determine the effect of variations in inlet valve timing on the power output, fuel efficiency and torque. The motor was provided with 45 degree poppet valves, inlet and exhaust valves being identical. The valve heads had a bottom diameter of 36 mm., a top diameter of 42 mm. and were lifted 7.5 mm. The inlet

valves began to open 15 degrees after the top dead centre, and by means of a stepped cam could be closed 27 degrees ahead of the lower dead centre, at the dead centre, and 19, 27, 40, 60 and 90 degrees past dead centre. The exhaust valves began to open 33 degrees ahead of dead centre and closed on dead centre. The effects of these changes in the timing of the inlet valve are graphically shown in Figs. 149 and 150, and the results of the tests may be summarized as follows:

As the inlet valve is set to close later, the power for a given speed of rotation increases until a lag of 60 degrees is

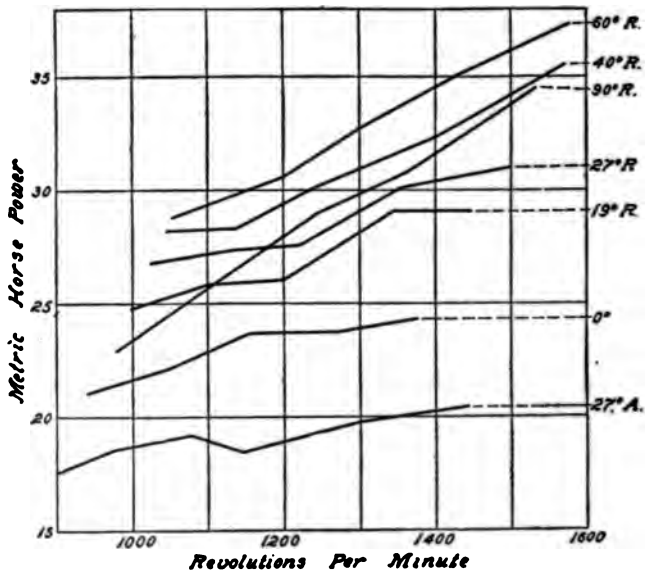

FIG. 149.—EFFECT OF INLET VALVE TIMING ON POWER OUTPUT.

reached. When the lag of the inlet valve is still further increased, to 90 degrees, the power diminishes, but the diminution in power becomes less as the speed of the motor increases, and for very high angular speeds such a lag would seem to give an increase in power. The angular speed corresponding to the maximum power is the greater the later the inlet valve closes.

The effect on the fuel economy is practically the same as that on the power output. That is, the amount of fuel consumed per horse power hour decreases as the inlet valve is

closed later, up to a lag of 60 degrees, but increases for a lag of 90 degrees.

It will be observed that the tests covered the operation of the motor at high speed only, from about 1,000 feet per minute piston speed upward. It is obvious that inlet valves with as big a lag as 60 degrees would not be very satisfactory for operation at low speed, and for this reason on stock motors the lag is always made considerably less than this. But the test results indicate that in racing motors an inlet valve lag of 60 degrees or more would be advantageous.

The reason the inlet valve has to close some time after the completion of the inlet stroke is that at high speed the inrushing column of gas possesses considerable inertia, and the charge continues to flow into the cylinder even after the piston has started on the return or compression stroke.

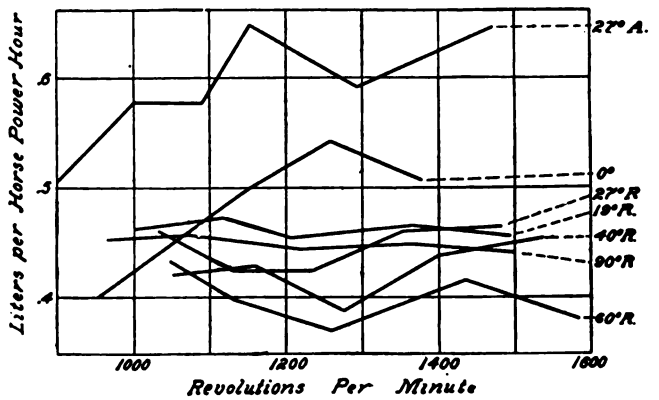

FIG. 150.—EFFECT OF INLET VALVE TIMING ON FUEL EFFICIENCY.

Cams and Cam Followers—The rate at which the valve is opened and closed depends upon the cam outline and upon the type and size of cam follower employed. From the standpoint of gas flow it is, of course, desirable that the valve should open and close very quickly, and remain fully open for the greatest possible length of time. However, the valve gear must operate quietly, and in order to do this it must lift and drop the valves more or less gradually.

There are three common types of cam followers. The most extensively used is the cam roller; next comes the mushroom type, and finally the rounded or V type.

There are also three types of cams, viz., the tangential cam, the convex flanked cam, used together with a mushroom type follower (called for short the mushroom type cam), and the constant acceleration cam, whose flank is concave. Either roller or round nose followers are used with the first and third types of cams. The tangential cam has been in use longest, and gives very satisfactory results, the only objection to it being that it requires a rather stiff spring. The mushroom type cam does not call for so stiff a spring, and opens the valve very quickly, thus giving a better volumetric efficiency, but it strikes the cam follower rather a sharp blow when first coming in contact with it, especially when the adjustment is not very close. The constant acceleration cam in one

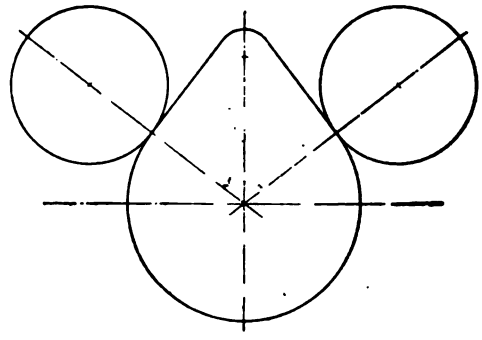

FIG. 151.—TANGENTIAL CAM.

sense is a compromise between the two other types, raising the valve less abruptly than the mushroom cam, and decreasing its speed more gradually, and consequently requiring a less strong valve spring than the tangential cam. With this cam the valve is first accelerated at a uniform rate until it attains its maximum speed. From that point on the valve is uniformly decelerated until at the point of maximum lift it has lost all speed. Disregarding the fact that there is a slight change in the pressure of the valve spring between the points of half lift and full lift this cam possesses the advantage that at high speed the spring force is fully utilized throughout the period of deceleration. However, the denomination "constant acceleration" does not by any means com-

pletely fix the form of the cam, even for a given arc of opening and maximum lift, for the periods of acceleration and deceleration are independently variable and the two together may be equal to or less than one-half the period of valve opening.

Laying Out Tangential Cam.—In Figs. 151-3 are shown the three forms of cams, and the methods by which they are laid out may be briefly described as follows: Suppose that the cam is to lift the inlet valve, and that the latter is to begin to open at 10 degrees past the top dead centre, and to close 40 degrees past the bottom dead centre. This makes the total period of opening equal to

$$180 + 40 - 10 = 210 \text{ degrees}$$

of crank motion, or 105 degrees of cam motion. The cam follower, of course, begins to lift at the moment when the radius at the point of tangency between the cam incline and the base circle is in line with the axis of the follower. Therefore, we first draw the base circle, which must be slightly larger in diameter than the camshaft and the exact diameter of which is determined by a method of calculation to be explained further on. Then we draw two radial lines, making with each other an angle of 105 degrees, and a third radial line bisecting this angle. Along the latter, from the circumference of the base circle outward we lay off a distance corresponding to the maximum lift of the valve. In the case of the tangential cam, at the points of intersection of the other two radial lines with the circumference of the base circle, we draw tangents to the base circle, and then with the point of the compass on the central radial line we draw a small circular arc such that it passes through the point of maximum lift and that the tangents to the base circle are also tangent to it. This completes the cam outline. We have then a cam which will raise the valve during the first half of the period of cam opening and lower it during the second half, there being no period of dwell in the position of full opening. In case the period of valve opening is considerably over 100 degrees of cam motion, as is often the case with exhaust cams, provision is made for a period of dwell in the position of full lift. We then draw a circular arc through the point of full lift, determined as explained in the foregoing, concentric with the base circle, and at the intersections of this arc with the tangents to the base circle draw rounding arcs to a radius the dimensions of which will be discussed further on.

Laying Out Mushroom Type Cam.—In laying out a mushroom type cam we again draw a base circle, and the three radial lines exactly as in the previous case. Then we lay off the point of maximum lift on the central radial line and with the point of the compass on this line draw a small top circle passing through the point of maximum lift. Then we draw the circular arc constituting the cam incline, which must be tangent to the base circle at the point where one of the outer radial lines intersects the circumference of that circle (which means that the centre of this circular arc must lie on an extension of this radial line) and also must be tangent to the top circle. The radii of the base circle, top circle and

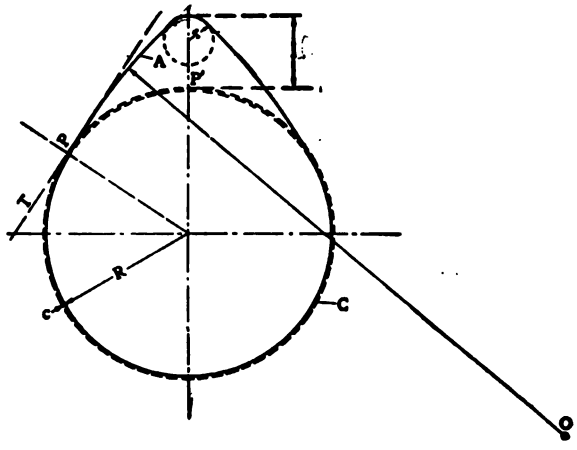

FIG. 152.—EXHAUST CAM FOR MUSHROOM TYPE CAM FOLLOWER.

flank curve and the lift and opening angle are mutually related, and these relations will be discussed further on. With mushroom cams there is no period of dwell in the full open position for either inlet and exhaust cams, and both kinds of cams, therefore, are laid out the same way.

Laying Out Constant Acceleration Cam.—Constant acceleration cams are laid out somewhat differently from the other two types, as the inclines of these cams are not plain geometrical lines, but curves of varying radius. After having laid off the base circle and the three radial lines denoting the beginning, middle and end of the opening period, respectively, we divide the opening period into a certain number of equal

parts, and draw radial lines through all division points. Then, by means of a formula to be developed later, we calculate the valve lift for each of these positions. Next we lay off the position of the cam roller centre for each of these positions along the corresponding radial line, remembering that the distance of the centre of the cam roller from the centre of the base circle is equal to the sum of the radius of the base circle, the radius of the roller circle and the lift. We then draw circles of the same radius as the cam roller around the various cam roller centres thus found and then draw a curve which is tangent to all of these circles and to the base circle, which constitutes the cam outline. In the case of exhaust valve cams it is advisable to have a period of dwell in the position of maximum opening, but the application of the above method

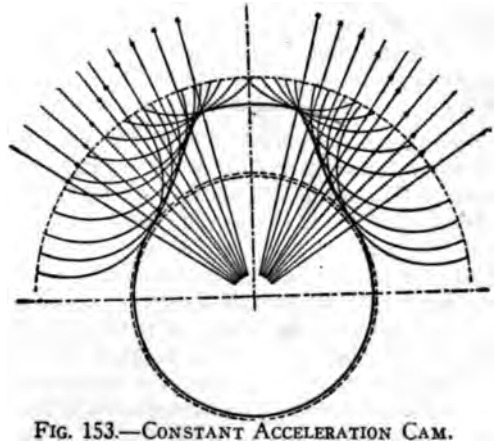

FIG. 153.—CONSTANT ACCELERATION CAM.

of laying out to such cams is obvious without further explanation.

Mushroom Type Cam Followers—The mushroom type of cam follower is slightly simpler in construction than the roller cam follower, and it also reduces the number of wearing parts by eliminating the roller pin. But since it substitutes sliding motion for rolling motion at the cam surface it is doubtful whether it reduces the wear in the valve gear on the whole.

The method of laying out a cam for a mushroom type follower is as follows (Fig. 152): First draw the base circle and the top circle, the radii of which must be assumed. The two centres must be placed a distance

$$D = R + c + l - r$$

apart. Now lay off the clearance circle C and a tangent T to this circle at a point P distant from the point P' where the line connecting the centres of the base and top circles cuts the clearance circle, an angle equal to one-half the valve period angle a. Then draw an arc A which is tangent to the base circle, the top circle and the tangent T to the clearance circle. The centre of this arc is found to be located at O. This arc forms the flank of the cam protuberance. A peculiarity of the mushroom type cam and follower is that during the lift the valve is accelerated very strongly and then decelerates at a much slower rate. This permits of using a comparatively weak spring. Speed and acceleration diagrams can be constructed graphically by working on a large scale. The kinematics of the tangential and mushroom types of cams were investigated by George S. Bowen (*Internal Combustion Engineering*, London, Oct. 15., 1913), Otto M. Burkhardt (*The Horseless Age*, Jan. 28 and February 4, 1914) and A. L. Nelson (*The Horseless Age*, Sept. 23—Oct. 21, 1914), and the following treatment is based on their methods:

Valve Speed and Acceleration with Tangential Cam.—In Fig. 154 is shown the outline of a tangential cam with the roller in the position where the lift begins. While in reality in a vertical motor the centre of the cam roller is always vertically above the centre of the cam base circle, in all of the diagrams of cam mechanisms in this chapter the whole mechanism is swung around through such an angle as to make the radius of the cam base circle to the point of tangency of the cam incline horizontal, this making the geometrical relations in most cases clearer. For the purpose of this discussion we will disregard the small clearance ("the thickness of a sheet of ordinary writing paper"), which is generally allowed between the base circle and the cam roller, and assume that the valve begins to lift as soon as the tangent strikes the cam roller. The lifting period evidently divides into two parts, which must be dealt with separately, viz., (1) when the cam roller is in contact with the straight portion of the cam incline, and (2) when it is in contact with the circular portion at the top of the cam—the top circle or rounding circle. Assuming uniform rotation of the cam, we must develop equations for the acceleration or deceleration of the cam follower and valve, then determine the maximum value of the deceleration, and having found this we must design a spring capable of imparting to a weight equal to that of the reciprocating parts of the valve mechanism (including one-half the

weight of the spring), an acceleration equal to the maximum deceleration determined by the cam outline for the maximum speed of the motor. The use of such a spring insures that the cam follower always remains in contact with the cam outline, thus obviating noisy operation.

Referring to Fig. 154 it will be seen that

$$A\ B \cos\theta = R + R_1.$$

Hence

$$A\ B = \frac{R + R_1}{\cos\theta}.$$

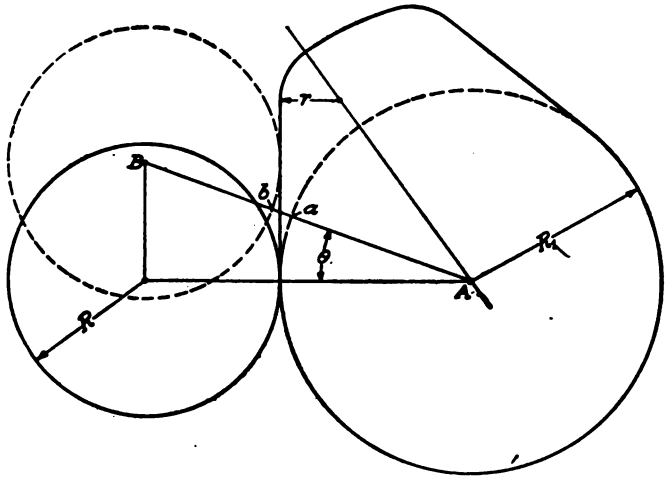

FIG. 154.—TANGENTIAL CAM, ROLLER ON STRAIGHT FLANK.

The dotted circle shows the roller on the straight part of the cam, and $a\ b$ evidently represents the lift at this point, after the cam has turned through an angle θ.

$$l = a\ b = A\ B - (R + R_1)$$

$$= \frac{R + R_1}{\cos\theta} - (R + R_1)$$

$$= (R + R_1)\left(\frac{1}{\cos\theta} - 1.\right)$$

To get the speed or rate of lift we differentiate this expression with respect to θ, which gives

$$dl = (R + R_1)\frac{\tan\theta}{\cos\theta}d\theta$$

The actual speed of lift, however, is represented by

$$\frac{dl}{dt},$$

hence,

$$v = (R + R_1)\frac{\tan\theta}{\cos\theta}\frac{d\theta}{dt}.$$

But

$$\frac{d\theta}{dt} = \frac{\theta}{t} = \frac{2\pi N}{60}$$

Hence

$$v = (R + R_1)\left(\frac{2\pi N}{60}\right)\frac{\tan\theta}{\cos\theta}.$$

To find the acceleration we differentiate this latter expression, which gives

$$a = (R + R_1)\left(\frac{2\pi N}{60}\right)^2 \left(\frac{1 + \sin^2\theta}{\cos^3\theta}\right)$$

It will be seen from this that as long as the cam roller remains on the straight part of the cam incline the valve is accelerated, because the sine increases with the angle and the cosine decreases until for an angle of 90 degrees, which is, of course, far beyond the practical limit, the cosine becomes zero, and hence the theoretical acceleration infinite. This further shows that deceleration of the valve is confined to that period of cam rotation during which the cam roller is in contact with the circular portion of the cam incline of radius r.

Referring now to Fig. 155, which shows the cam roller on the circular portion of the cam incline, since the sines of the angle of an oblique triangle are proportional to the opposite sides—

$$\frac{AC}{\sin(180° - \beta)} = \frac{R + r}{\sin\gamma}$$

But

$$\gamma + \delta + (180° - \beta) = 180°,$$

hence

$$\beta = \gamma + \delta$$

But

$$\sin(180° - \beta) = \sin\beta,$$

and hence

$$= \sin(\gamma + \delta).$$

Therefore

$$\frac{AC}{\sin(\gamma + \delta)} = \frac{R + r}{\sin\gamma}$$

from which it follows that

$$A\ C = (R + r)\frac{\sin(\gamma + \delta)}{\sin\gamma}$$

$$= (R + r)\left(\frac{\sin\gamma\cos\delta + \cos\gamma\sin\delta}{\sin\gamma}\right)$$

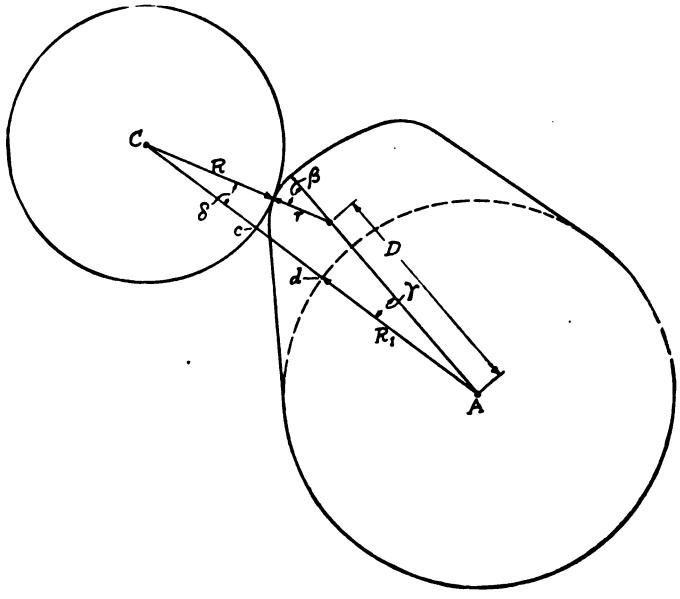

FIG. 155.—TANGENTIAL CAM, ROLLER ON ROUNDING CIRCLE.

$$= (R + r)\ (\cos\delta + \cot\gamma\sin\delta)$$

Also, by the same proposition quoted above,

$$\frac{D}{\sin\delta} = \frac{R + r}{\sin\gamma}$$

so that

$$\sin\delta = \frac{D\sin\gamma}{R + r}$$

and

$$\cos\delta = \sqrt{1 - \frac{D^2\sin^2\gamma}{(R + r)^2}}$$

Substituting these values for $\sin\delta$ and $\cos\delta$ in the above expression for $A\ C$, we get

$$A\,C = (R + r)\sqrt{1 - \frac{D^2 \sin^2 \gamma}{(R + r)^2}} + \cot \gamma \frac{D \sin \gamma}{R + r}$$

$$= \sqrt{(R + r)^2 - D^2 \sin^2 \gamma} + D \cot \gamma \sin \gamma$$

$$= \sqrt{(R + r)^2 - D^2 \sin^2 \gamma} + D \cos \gamma.$$

The lift of the valve at this point, when the cam must turn through an angle γ till the valve is fully lifted, is

$$l = cd = A\,C - (R + R_1)$$

$$= \sqrt{(R + r)^2 - D^2 \sin^2 \gamma} + D \cos \gamma - (R + R_1).$$

Differentiating this expression with respect to the time, we get

$$v = \frac{d\,l}{d\,t} = \left[\frac{D^2 \sin \gamma \cos \gamma}{\sqrt{(R + r)^2 - D^2 \sin^2 \gamma}} + D \sin \gamma\right] \frac{2\,\pi\,N}{60}$$

Differentiating again to find the acceleration we obtain

$$a = \frac{d\,v}{d\,t} = -\left[D^2 \frac{D^2 \sin^4 \gamma - (R + r)^2 (2 \sin^2 \gamma - 1)}{\left\{(R + r)^2 - D^2 \sin^2 \gamma\right\}^{3/2}} + D \cos \gamma\right] \left(\frac{2\,\pi\,N}{60}\right)^2$$

This is evidently a maximum when $\gamma = o$, that is, at the moment the valve attains its full lift. The expression then reduces to the comparatively simple form

$$a = -\left(\frac{D^2}{(R + r)} + D\right)\left(\frac{2\,\pi\,N}{60}\right)^2 \textit{ inches per second per second.}$$

By now dividing by 12 to reduce to feet per second per second and inserting the above value of a in the equation

$$F = \frac{W\,a}{g}$$

we get for the spring force required to hold the valve down to the cam

$$F = \frac{W}{12\,g}\left(\frac{D^2}{R + r} + D\right)\left(\frac{2\,\pi\,N}{60}\right)^2$$

Relation Between Parts of Tangential Cams.—It is not hard to see that there must be a definite relation between the radius of the base circle, the radius of the rounding circle and the angle of complete lift of a tangential cam. In an inlet cam there usually is no period of dwell at full lift, the valve beginning to drop again as soon as it has been fully

lifted. In that case the angle of complete lift is equal to $\frac{\phi}{2}$ or one-half the angle of opening. We then have (Fig. 156)

$$D \cos\frac{\phi}{2} = R_1 - r$$

$$D = l + R_1 - r$$

Substituting for D in the first of the above equations we get

$$R_1 \left(1 - \cos\frac{\phi}{2}\right) = r \left(1 - \cos\frac{\phi}{2}\right) + l \cos\frac{\phi}{2}$$

$$R_1 = r + l \frac{\cos\frac{\phi}{2}}{1 - \cos\frac{\phi}{2}}$$

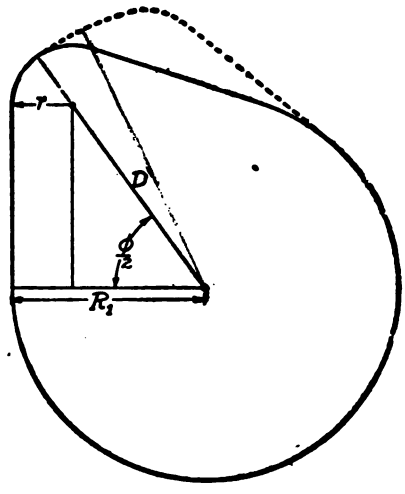

FIG. 156.—TANGENTIAL CAM, RELATIONSHIP OF PARTS.

This same equation can, of course, also be applied to exhaust cams in which there may be a period of dwell in the full open position (as shown by dotted curve), but in that case the angle of complete lift must be substituted for one-half the angle of opening.

In plotting the curve of lift by the tangential cam it is desirable to know the angle θ_m corresponding to that angular motion of the cam from the point of beginning of lift to the point where the cam follower first comes in contact with the

top circle. The cam is shown in this position in Fig. 157, and it will be seen that

$$\tan \theta_m = \frac{D \sin \frac{\phi}{2}}{R + R_1}$$

Of course, it is not absolutely necessary to know the value of this angle in order to plot the curve of lift, because by starting to plot from the points of beginning of lift and maximum lift, according to the formulae for the lift on the straight and circular portions of the cam incline, respectively, we

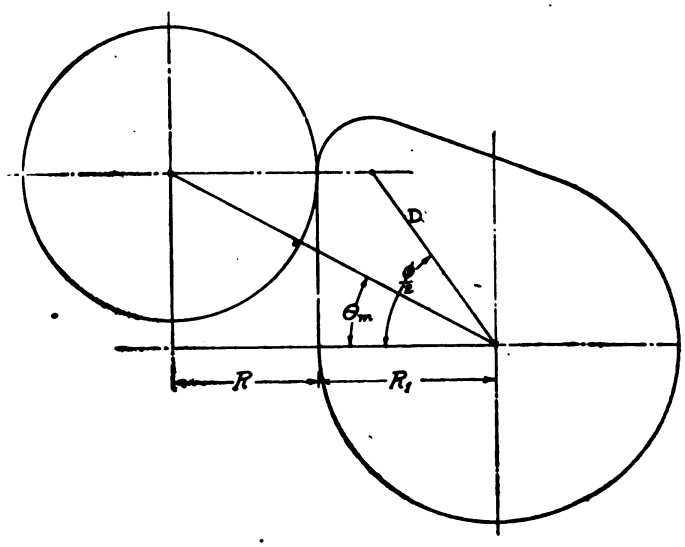

FIG. 157.—TANGENTIAL CAM, ROLLER AT JUNCTIONS OF STRAIGHT AND CURVED PORTIONS.

reach a point where the two portions of the lift curve intersect and this, of course, is the point corresponding to the angle θ_m, and completes the lift curve.

We may now figure out an example. Assume that for an inlet cam the period of opening is to be 100° so that

$$\frac{\phi}{2} = 50°.$$

Also, that the lift is to be 5/16 inch, and the radius of the rounding circle 3/16 inch. In that case

$$R_1 = 3/16 + 5/16\left(\frac{\cos 50^\circ}{1 - \cos 50^\circ}\right) = \tfrac{3}{4} \text{ inch.}$$

From this we find the value D to be

$$D = \tfrac{3}{4} + 5/16 - 3/16 = \tfrac{7}{8} \text{ inch.}$$

If we assume the valve reciprocating parts to weigh one pound, and the cam roller to have a radius of ½ inch, then the pressure of the valve spring in the position of full opening for a crankshaft speed of 2,400 r.p.m. must be

$$\frac{1}{12 \times 32.16}\left(\frac{\tfrac{7}{8} \times \tfrac{7}{8}}{11/16} + \tfrac{7}{8}\right)\left(\frac{6.28 \times 1{,}200}{60}\right)^2 = 81 \text{ lbs.}$$

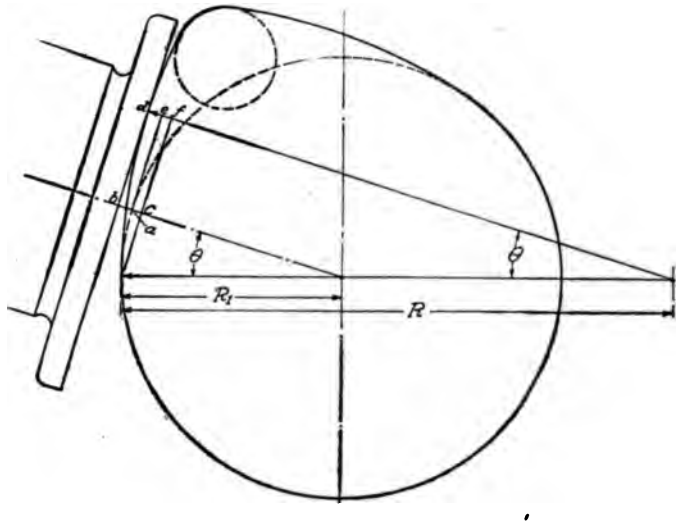

FIG. 158.—MUSHROOM CAM, FOLLOWER ON FLANK CURVE.

Valve Speed and Acceleration with Mushroom Cam.—So far as that portion of the "mushroom" type cam incline is concerned which depends on the radius of the top circle, the same analysis applies as in the case of the tangential cam. The cam follower having a flat surface, it is equivalent in its action to a roller of infinite radius. By making $R = \infty$ in the equation for the spring pressure required, the term

$$\frac{D^2}{R + r}$$

vanishes, and the equation becomes

$$F = \frac{W D}{12 g} \left(\frac{2 \pi N}{60} \right)^2$$

It is, however, desirable to also investigate the acceleration while the follower is on the flank curve. Referring to Fig. 158 the lift is represented by

$$a\,b = b\,c - a\,c$$
$$b\,c = d\,f = R\,(1 - \cos\theta)$$
$$a\,c = R_1\,(1 - \cos\theta)$$

subtracting

$$l = (R - R_1)\,(1 - \cos\theta)$$

Differentiating with respect to t

$$v = (R - R_1) \sin\theta \frac{d\,\theta}{d\,t}$$
$$= (R - R_1) \sin\theta \left(\frac{2 \pi N}{60} \right)$$

Differentiating again with respect to time we get

$$a = (R - R_1) \cos\theta \left(\frac{2 \pi N}{60} \right)^2$$

This gives positive results for values of θ up to 90 degrees, far beyond the practical limits, and shows that deceleration takes place only during that portion of the cam period while the follower makes contact with the top circle. The circular motion of the cam from the beginning of valve lift to the point where the follower contacts with the cam at the junction of the two circular arcs making up its incline may be found from the equation (see Fig. 159)

$$(R - r) \sin\theta_m = D \sin\frac{\phi}{2}$$

$$\sin\theta_m = \frac{D}{R - r} \sin\frac{\phi}{2}$$

In order to be able to draw the full curve of lift for the mushroom cam we must derive also an expression for the lift when the cam follower contacts with the top circle. By referring to Fig. 160 it will be seen that the lift for that part of the rotation of the cam while the follower contacts with the top circle may be expressed by the equation

$$l = D \cos\gamma + r - R_1$$

When the valve is fully lifted the value of γ is nil, and the maximum value of this angle is equal to

$$\gamma_m = \frac{\phi}{2} - \theta_m$$

Determination of Radius of Flank Circle.—The radius of the flank circle of a cam for a mushroom type follower de-

pends upon the radii of the base and top circles and the angle of cam motion corresponding to the full lift. Generally with "mushroom type" cams there is no dwell of the valve in the full open position, the valve beginning to close as soon as it has attained its maximum lift. In other words, the angle of cam motion corresponding to the full lift of the valve is equal

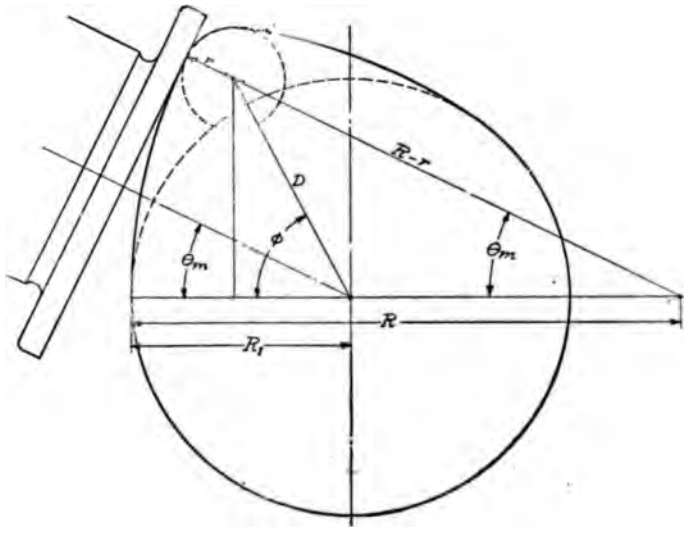

FIG. 159.—MUSHROOM CAM, FOLLOWER AT JUNCTION OF FLANK AND TOP CIRCLE.

to half the angle of valve opening $\left(\frac{\phi}{2}\right)$ Referring now to

$$\left(R - r\right)^2 = \left(D \sin \frac{\phi}{2}\right)^2 + \left(R - R_1 + D \cos \frac{\phi}{2}\right)^2$$

$$R^2 + r^2 - 2\,R\,r = D^2 \sin^2 \frac{\phi}{2} + R^2 + R_1^2 - 2\,R\,R_1$$

$$+ 2\,R\,D \cos \frac{\phi}{2} - 2\,R_1\,D \cos \frac{\phi}{2} + D^2 \cos^2 \frac{\phi}{2}$$

$$= D^2 + R^2 + R_1^2 - 2\,R\,R_1 + 2\,R\,D\cos\frac{\phi}{2}$$

$$- 2\,R_1\,D\cos\frac{\phi}{2}$$

$$2\,R\,R_1 - 2\,R\,r - 2\,R\,D\cos\frac{\phi}{2} = D^2 - r^2 + R_1^2 - 2\,R_1\,D\cos\frac{\phi}{2}$$

$$R = \frac{D^2 - r^2 + R_1^2 - 2\,R_1\,D\cos\frac{\phi}{2}}{2\left(R_1 - r - D\cos\frac{\phi}{2}\right)}$$

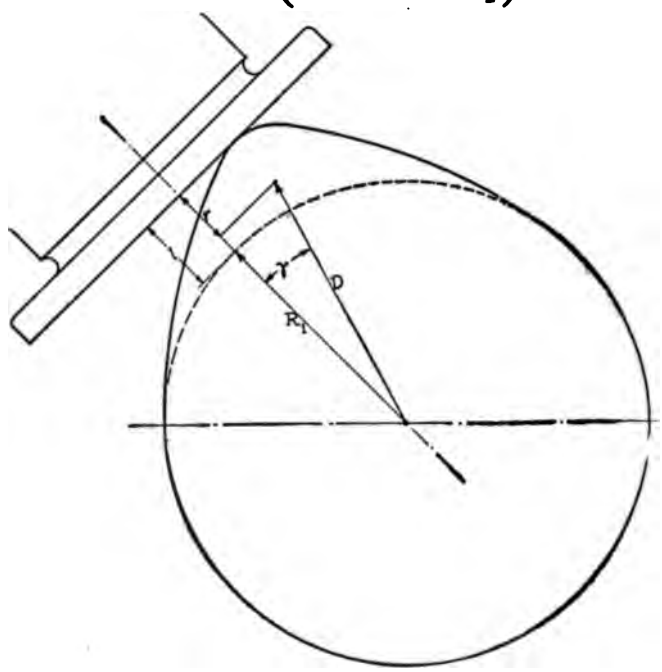

FIG. 160.—MUSHROOM CAM, FOLLOWER ON TOP CIRCLE.

This value becomes infinite and the cam therefore becomes a tangential cam (which can be successfully used only with a roller or round nosed follower) if

$$R_1 = r + D\cos\frac{\phi}{2}$$

Spring Force Required with Constant Acceleration Cam.—Let l be the lift and a the angle of cam motion during which the valve is completely lifted. The time required for turning this angle is

$$\frac{a}{\frac{2\pi N}{60}} = \frac{60\,a}{2\pi N} \text{ seconds}$$

Since the acceleration is constant the maximum speed is twice the average, viz.,

$$\frac{2\,l}{\frac{60\,a}{2\pi N}} = \frac{4\pi N l}{60\,a} \text{ inches per minute}$$

$$\text{or } \frac{\pi N l}{180\,a} \text{ feet per minute.}$$

Now let us suppose that deceleration takes place in a fraction f of the total time of lift or

$$\frac{60\,f\,a}{2\pi N} = \frac{30\,f\,a}{\pi N}$$

Then the rate of deceleration is evidently

$$a = \frac{\frac{\pi N l}{180\,a}}{\frac{30\,f\,a}{\pi N}} = \frac{\pi^2 N^2 l}{5400\,f\,a^2}$$

Inserting this value of a in the equation for accelerating force we get

$$F = \frac{\pi^2 N^2 W l}{5400\,f\,g\,a^2}$$

In this equation a must be inserted in terms of radians.

As the lifting angle is generally expressed in degrees, by letting a represent degrees and incorporating π^2 and g in the constant we get

$$F = \frac{N^2 W l}{5.36\,f\,a^2}$$

We may now summarize the formulæ for the spring pressures required and will at the same time reduce them to their simplest and handiest form by incorporating all known factors in the numerical constants.

For tangential cams

$$F = \frac{W N^2}{35200}\left(\frac{D^2}{R+r} + D\right) \text{ lbs.}$$

For mushroom follower cams

$$F = \frac{W N^2 D}{35200} \text{ lbs.}$$

For constant deceleration cams

$$F = \frac{W N^2 l}{5.36\,f\,a^2} \text{ lbs.}$$

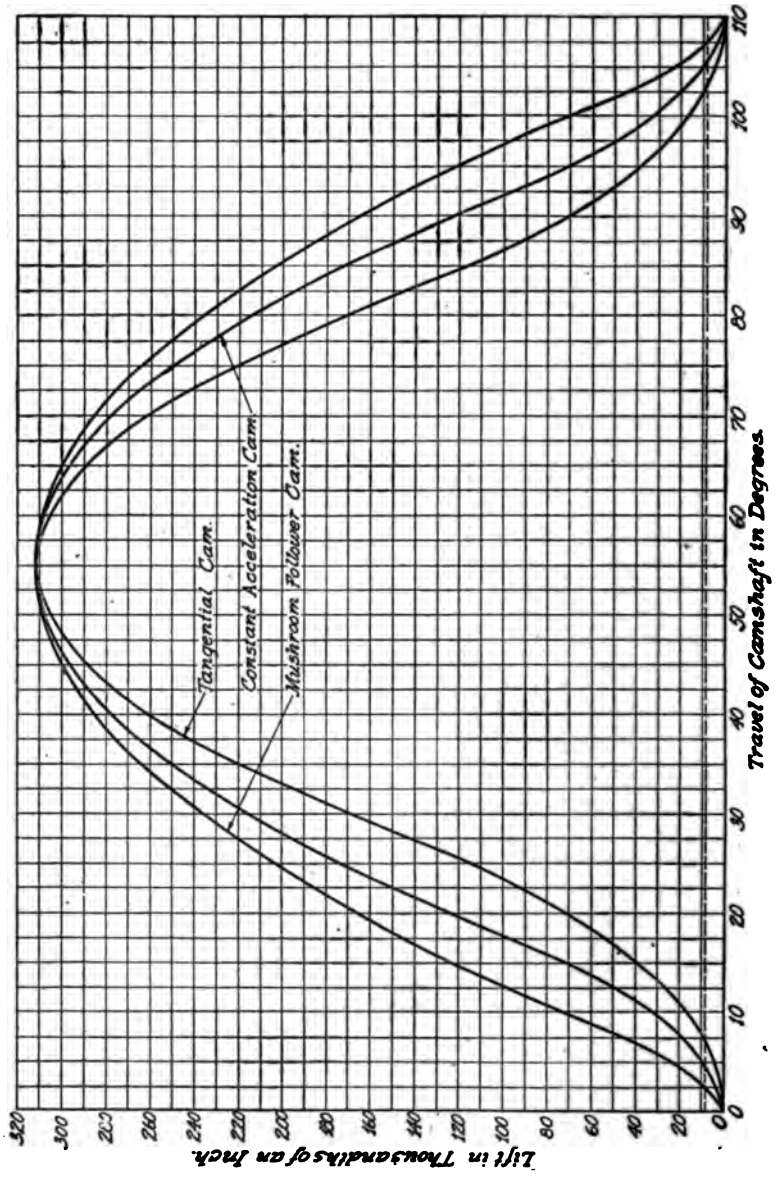
Tangential Cam.
Constant Acceleration Cam.
Mushroom Follower Cam.
Travel of Camshaft in Degrees.
Lift in Thousandths of an Inch.
0
10
20
30
40
50
60
70
80
90
100
110
20
40
60
80
100
120
140
160
180
200
220
240
260
280
300
320

where

W = weight of valve reciprocating parts (including one-half of spring) in pounds.

D = distance between center of base circle and center of top circle or rounding circle in inches.

R = radius of cam roller in inches.

r = radius of top circle or rounding circle in inches.

N = speed of camshaft in r. p. m.

l = lift of valve in inches.

a = angle of camshaft motion in degrees required to completely lift the valve.

f = fraction of this angle during which the valve decelerates (f is made greater than 0.5 to reduce the spring force required).

In the case of the tangential and mushroom type follower cams the spring pressure obtained by the formulae is that which the spring must exert when the valve is fully lifted. When the valve is closed the spring pressure, of course, will be less as the spring is then less compressed. In the case of the constant deceleration cam the spring must exert a pressure equal to that calculated by means of the formula when the valve has attained its maximum speed and is beginning to decelerate. At that moment the valve has been lifted a distance

$$l = \frac{(1 - f)^2 L}{f^2 + (1 - f)^2}$$

Comparison of Valve Lift Curves.—In Fig. 161 are shown valve lift curves for the three types of cams—tangential, mushroom and constant acceleration—which permit of certain comparisons being made. It should be pointed out, however, that no absolute comparison is possible, as with each type of cam there are certain assumed values which change the form of the curve; these variables are entirely different in character in the different cam types and it is impossible to assign to them values that might be called strictly equivalent. In the figure the lift of the valve and the period of opening are the same in every case. These dimensions are such as might be used for the inlet cam of a high-speed motor. In every case there is no dwell at full lift. The data for the three cams may be summarized as on the next page.

It will be seen from the cut that with the mushroom follower cam the valve accelerates very quickly, and after 15 degrees of cam motion the lift is more than three times as great as with the tangential cam, which gives the smallest acceleration to the valve. The constant acceleration cam, as here chosen, produces a lifting curve lying midway between

DATA OF VALVES OF THREE TYPES.

Tangential		Mushroom		Const. Accel.	
l	= 5/16 inch	l	= 5/16 inch	l	= 5/16 inch
r	= 3/16 inch	r	= ⅛ inch	$\frac{\phi}{2}$	= 55°
R	= ½ inch	R_1	= ⅝ inch	f†	= 2/3
R_1*	= 0.607 inch	R*	= 10.125 inches		
$\frac{\phi}{2}$	= 55°	$\frac{\phi}{2}$	= 55°		

* Calculated from other data.
† Proportion of total period of lift that valve decelerates.

the other two. This latter curve may be widely varied by varying the factor f. For instance, if f were made equal to 0.5, so that the acceleration during the first half of the lift were equal to the deceleration during the last half, then the lift curve for the constant acceleration cam would correspond rather closely to that of the tangential cam. The steepness at the beginning of the lift curve is a measure of the blow dealt the cam follower by the cam when first coming in contact with it. As in an engine there is always a slight clearance between the cam and cam follower during the non-lift period, varying from about 0.004, in the case of the inlet valve, to 0.008 inch in the case of the exhaust valve, the conditions at the moment when the lift begins are represented by the angles made by the different lift curves with the dotted horizontal line whose distance from the base line represents the valve clearance. It will be seen from the cut that the mushroom type cam crosses this line at by far the greatest angle, consequently this cam would be expected to be the most noisy, followed by the constant acceleration cam as here proportioned and by the tangential cam, in that order.

For any given cam motion from the point where the valve begins to lift, the lift is greatest for the mushroom cam, hence the volumetric efficiency would be expected to be greatest with that cam. Moreover, from the standpoint of strength of spring required, the mushroom type cam also ranks first in merit. When the camshaft has still 20 degrees to travel to the full lift position, the valve has yet to pass through a vertical distance of about 0.048 inch in the case of the mushroom type cam, 0.062 inch in the case of the constant acceleration type cam, and 0.092 inch in the case of the tangential cam. The average speed of the valve for the remainder of the lift

is therefore greatest in the case of the tangential, and least in the case of the mushroom type cam. Since the speed of the valve in all cases reduces to zero during these 20 degrees of cam motion, it may be inferred that the deceleration is greatest in the case of the tangential cam. Of course, the best way of comparing the cams in this respect is by calculating the spring pressures required with each cam, by means of the formulæ derived in the foregoing.

If we assume that the weight of the valve reciprocating parts in each case is 1 lb., that the radius R of the cam roller is 0.5 inch, and that the maximum speed of the camshaft is 1,200 r. p. m., we get for the valve spring pressure required in the different cases:

Tangential cam

$$\frac{1 \times 1200 \times 1200}{35200}\left(\frac{0.732 \times 0.732}{0.6875} + 0.732\right) = 62 \text{ lbs.}$$

Mushroom type cam

$$F = \frac{1 \times 1{,}200 \times 1{,}200 \times 0.8125}{35{,}200} = 33.3 \text{ lbs.}$$

Constant acceleration cam

$$F = \frac{1 \times 1{,}200 \times 1{,}200 \times 0.3125}{5.36 \times 0.666 \times 55 \times 55} = 41.6 \text{ lbs.}$$

Cams to be used in connection with rounded or V-shaped followers can be laid out by the same method as cams for roller followers.

Among the factors determining the value of any valve construction is the average side thrust of the cam follower on its guide which should be as low as possible. Another such factor is the lift angle integral. This integral is represented by the area enclosed by the valve opening diagram. Therefore, the greater the area enclosed by the valve opening diagram the better the cam form from this point of view. The above statement is based on the assumption that the area of valve opening is proportional to the lift, which is practically but not absolutely correct.

The vertical reaction between the cam surface and the cam follower is equal to the sum of the spring pressure and the inertia force. The latter is positive during the first half of the lift and the last half of the drop, and negative during the last half of the lift and the first half of the drop. However, the reaction is vertical only at no lift and at full lift. For all intermediate positions the reaction is at an angle, as indicated in Fig. 162. Calling the vertical pressure P, it is evident that the pressure or reaction at the contact surface between cam and cam follower is

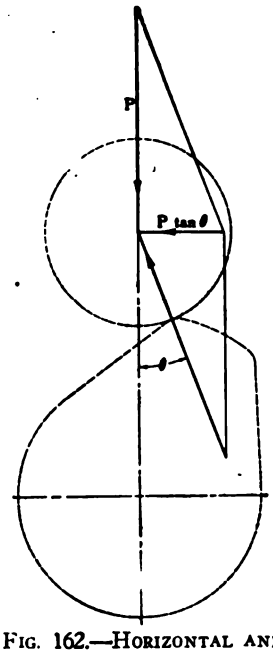

FIG. 162.—HORIZONTAL AND VERTICAL COMPONENTS OF REACTION BETWEEN CAM AND ROLLER.

$$P_r = \frac{P}{\cos \theta}$$

and the side thrust on the push rod guide

$$P_s = P \tan \theta.$$

Calculation of Springs — The maximum safe pressure of coiled wire springs and the deflection under a given load are obtained by means of the following formulæ:

$$W = \pi \frac{S d^3}{8 D} \quad \text{.....(90 } A\text{)}$$

$$F = \frac{8 n P D^3}{E d^4} \quad \text{.....(90 } B\text{)}$$

Where

D = mean diameter of the coil,
W = maximum safe load in pounds,
F = compression of spring,
d = diameter of wire,
n = number of coils in spring,
S = maximum safe fibre stress of material,
E = torsional modulus of elasticity,
P = load in pounds.

The torsional modulus of elasticity may be taken at 12,000,000 and the maximum safe working stress may be assumed to be 50,000 pounds per square inch. In general the outside diameter of the spring is made about seven-eighths the clear diameter of the valve, and the length of the spring under its initial pressure twice its outside diameter. These proportions can be used for guidance in laying down values for some of the factors in the above equations.

To show the application of the above formulæ we will calculate a spring for a valve with a lift of ⅜ inch. We will assume that the mean diameter (from centre to centre of wire) of the coil is 1½ inches and that a spring pressure of 80 pounds is required when the valve is fully lifted. We will calculate this

spring so that it exerts 60 pounds pressure when the valve is closed. Since the lift of the valve is ⅜ inch, 20 pounds pressure compresses the spring ⅜ inch.

The necessary diameter of wire we find from equation (90A). Inserting the assumed values in this equation we have

$$80 = \frac{\overset{\pi}{3.14} \times \overset{S}{50{,}000} \times d^3}{8 \times \underset{D}{1.5}}$$

$$d = \sqrt[3]{\frac{960}{157{,}000}} = 0.183 \textit{ inch.}$$

This is approximately the diameter of a No. 7 (Birmingham gauge) steel wire, which we will adopt. The actual diameter of this wire is 0.18 inch. Now, to find the number of turns required, we take into consideration the fact that the total deflection is to be ⅜ inch for 20 pounds load.

Inserting in equation (90B)—

$$\tfrac{3}{8} = \frac{8 \times 20 \times 1.5^3 \times n}{12{,}000{,}000 \times 0.18^4}$$

$$n = \frac{\tfrac{3}{8} \times 12{,}000{,}000 \times 0.18^4}{8 \times 20 \times 1.5^3} = 9 \textit{ approximately.}$$

It was stated above that the length of the spring under its initial pressure is usually about twice its outside diameter. We will assume that the drawing in our case shows that the spring can be 3 inches long. Then, since the spring when the valve is closed is under 60 pounds pressure and it compresses ⅜ inch for 20 pounds pressure, it follows that its initial compression is

$$\frac{60 \times \tfrac{3}{8}}{20} = 1\tfrac{1}{8} \textit{ inches.}$$

The spring should therefore be wound to a length of

$$3 + 1\tfrac{1}{8} = 4\tfrac{1}{8} \text{ inches.}$$

If the results obtained under the first assumptions are not satisfactory, different assumptions can be made and the calculation made over again. In this connection it should be remembered that for a given maximum pressure the stress to which the spring material is subjected varies directly with the diameter of the coil and inversely as the cube of the wire diameter. On the other hand, for a certain deflection per pound of load the number of coils, n, varies as the fourth power of the wire diameter and inversely as the cube of the

coil diameter. Combining these two propositions, increasing the coil diameter increases the stress and decreases the number of coils required, while increasing the wire diameter decreases the stress and increases the number of coils required.

In order to facilitate the design of coiled springs for poppet valves the maximum safe loads and deflections per coil have been calculated for all the wire sizes commonly used for valve springs and for the different coil diameters corresponding to each size, and the results are given in a table contained in the appendix.

Spring Rests—A few foreign manufacturers bend one-half of the lowermost coil of the spring inward and pass it through a hole through the valve stem, as shown at *A*, Fig. 163, but the general practice is to provide a cup-shaped washer for the spring to rest on. The construction shown at *B* is in very common use.

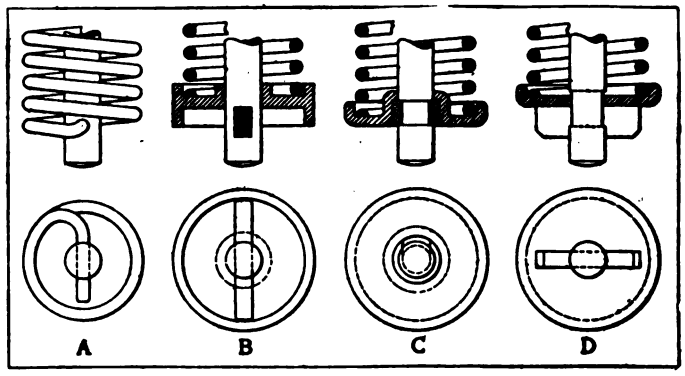

FIG. 163.—VALVE SPRING SUPPORTS.

The valve stem is provided with a transverse hole or slit in which is inserted a key. The key forms a support for the washer and is held from endwise motion by a downwardly turned flange on same. An upward flange on the washer centres the spring. In design *C* the valve stem is reduced in diameter near its lower end and a steel collar with a radial slot is slipped over this reduced portion to support the washer, which is of the shape shown, and is stamped from heavy sheet metal. At *D* is shown an arrangement used to a considerable extent in France. It is identical with *B* except for the fact that the sheet metal washer has no flange for retaining the key, which latter is somewhat wider and provided with a slot at the middle of its under side, whereby it is retained in position.

Design of Push Rods—If the valves are located in side pockets of the cylinders, they are operated from the cams directly through the intermediary of a push rod. The latter usually consists of a cylindrical steel part moving in a brass guide secured to the crank casing. The push rod carries the cam roller or other type of cam follower at its lower end, and is provided with adjusting means at its upper end. A typical push rod is shown in Fig. 164.

In the design of these members, lightness is an important consideration, since the strength of the valve spring required, and the shock and noise produced, will be directly proportional to the weight of the parts moved by the cam, which include the

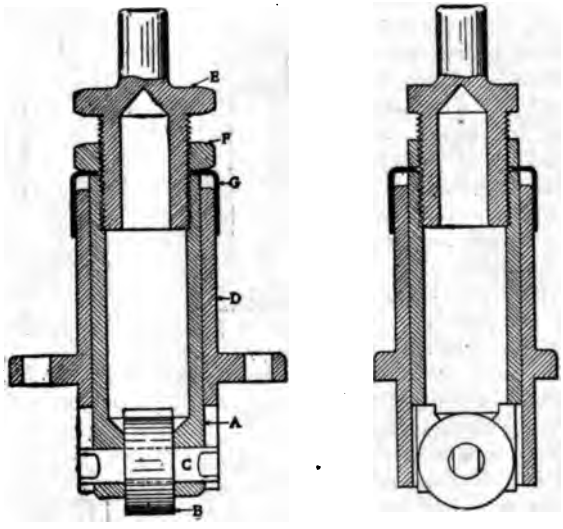

FIG. 164.—PUSH ROD.

push rod. In Fig. 164, *A* is the body portion of the push rod, which is drilled out from the top end for the sake of lightness. The lower end is slotted transversely to receive the roller *B*, which is carried on the roller pin *C*; the latter extends a short distance beyond the circumference of the push rod, its flattened ends working in narrow vertical slots in the push rod guide *D*, whereby the roller is kept parallel with the cam. At its upper end the push rod is internally threaded to receive the adjusting plug *E*. The latter is provided with an hexagonal head, to which a wrench can be applied, and a check nut *F* to lock it in adjust-

ment. A sheet metal dust cap *G* is clamped between the lock nut *F* and the top end of the push rod body, and passes over the push rod guide, thus excluding dust and grit from the bearing surface. The plug *E* is also shown drilled out, with the object of reducing its weight. The projection at the top of the plug should be hardened, so it will not be marred or upset by the continual hammering it receives as it strikes the end of the valve stem. Dust caps, of course, are superfluous when the valve mechanism is enclosed.

The push rod guide is usually secured to the crankcase by means of two studs passing through lugs cast integral with it, and suitable nuts, or the guides of adjacent cylinders are held down by means of X-shaped yokes clamped to the crankcase by means of a stud midway between the guides.

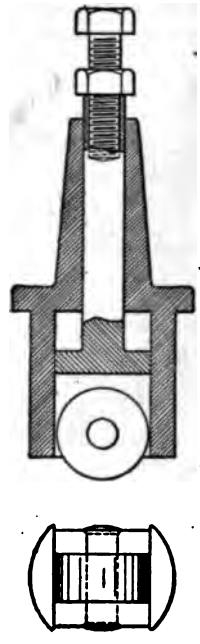

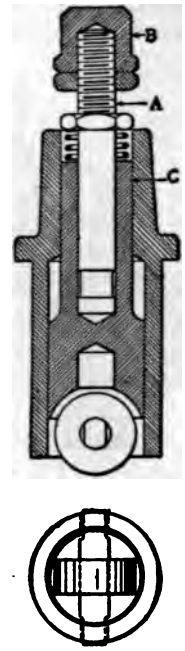

Fig. 165. Fig. 166.

A somewhat different design of push rod and guide is shown in Fig. 165. Here the bottom end of the push rod is made in the shape of a squared fork, and the bottom end of the guide is milled with a transverse slot, in which the square end of the push rod is guided. No special provisions are necessary for keeping the cam roller square with the cam. The adjusting means in this case consists of a plain capscrew and locknut. No provisions are made for a dust cap, and the top end of the guide is therefore left unfinished on the outside.

An improved type of push rod designed to automatically take up the clearance is shown in Fig. 166. This push rod really consists of two parts, one telescoping the other. The upper one is in the form of a rod, *A*, with an integral hexagonal flange near its middle, threaded at its upper end to receive the adjusting cap *B*

and check nut, and cut down in diameter for a certain length near its lower end. This rod is a snug fit in a drill hole in the upper end of the lower portion *C*. A small coiled spring surrounds the rod *A* where it emerges from part *C*, and lengthens the push rod so as to take up the entire distance between the cam and the bottom end of the valve stem. Some oil is introduced into the bottom of the drill hole *C*, which acts as a cushion, and thus tends to reduce the shock.

The need for figuring on a certain clearance in the valve operating mechanism arises from the fact that in the operation of the engine the valve stems, especially those of the exhaust valves, are raised to a higher temperature than the cylinders, whose temperature is limited by the water jacket. Consequently, if the push rods were adjusted while the engine was cold so that there was practically no clearance in the valve operating mechanism, the valves would not seat after the engine had heated up. The clearance allowed between push rod and valve stem usually amounts to 0.004 inch in the case of the inlet valve, and 0.008 inch in the case of the exhaust valve.

Cam and Roller Dimensions—The width of the cam can be made one-quarter the clear diameter of the valve when to be used with a roller follower, and one-third the clear diameter when to be used with a sliding type of follower.

The cam roller should be kept fairly small in diameter, because with most designs of push rod the diameter of this rod must be slightly greater than the roller diameter. A roller which will revolve twice as fast as the cam will give satisfactory results, and the pin can be made of one-third the diameter of the roller. With mushroom type cam followers it is a good plan to offset the follower lengthwise from the middle of the cam, so the follower will rotate in its bearing and no groove will wear in its foot. Such a follower is shown in Fig. 167.

Cam Levers—In order to reduce the side thrust on the push rod, one-armed levers are sometimes interposed between the cam and the push rod, as illustrated in Fig. 168. These levers are so arranged that they occupy a position perpendicular to the push rod axis when the valve is half lifted. The horizontal component of the cam thrust then comes on the lever and is taken up by the lever pivot. However, the push rod is not entirely relieved of side thrust, because the free end of the lever moves

in an arc or a circle instead of straight up and down, and the bottom end of the push rod has to slide on it. If that part of the lever on which the push rod bears is given such a curvature that the push rod is always at right angles to the contact surface, then the side thrust is equal to the product of the

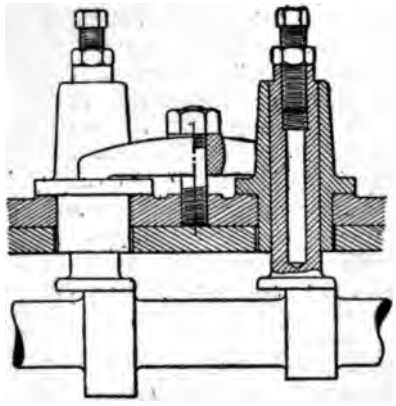

FIG. 167.—MUSHROOM TYPE OF CAM FOLLOWER AND GUIDE SECURED BY YOKE.

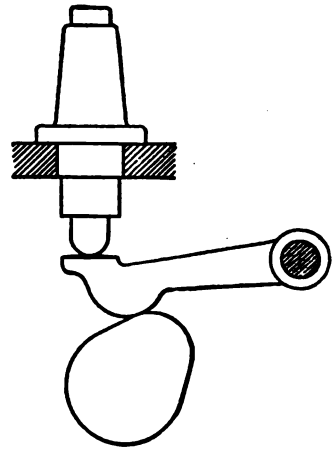

FIG. 168.—LEVER BETWEEN CAM AND PUSH ROD.

upward thrust on the push rod by the friction coefficient. This is considerably less than the side thrust of the cam, but since the object of the cam lever is only partly accomplished and since it adds to the complication, this arrangement has lost considerable of its one time popularity. The aim now seems to be to provide the push rod guide with a liberal surface, bringing it down as near to the cam as possible and provide for copious lubrication. Bell crank levers are much used between cam and push rod in V engines to permit of the operation of similar valves of oppositely located cylinders by means of a single cam.

Overhead Valves—When the valves are located in the cylinder head with their stems pointing upwardly, they are operated by means of tappet rods (or tubes) and short tappet levers. A construction of this type is illustrated in Fig. 169. With these valve gears the weight of the moving parts is naturally greater than with ordinary valve gears for valves located

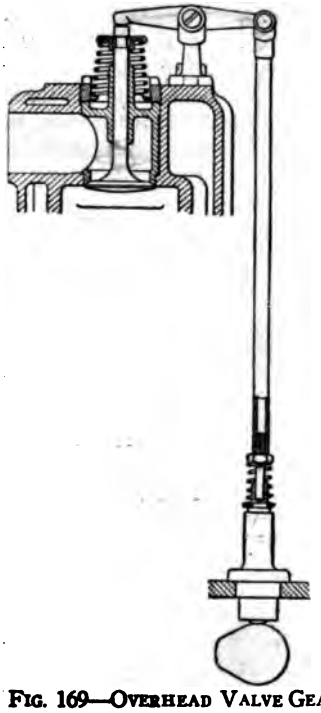

FIG. 169—OVERHEAD VALVE GEAR.

in side pockets, and every effort should therefore be made to eliminate all unnecessary weight. The tappet rods are preferably made of steel tubing of an outside diameter of about ⅜ inch. Into the lower end of the tube can be fitted an adjustable threaded steel rod whose lower end fits into a hole drilled into the push rod, and into the upper end a forked connector. The tappet lever on top of the cylinder is pivoted on a bracket bolted to the cylinder head. A spring surrounding the lower part of the tappet takes up the slack in the mechanism outside the crank case, and adjustment for wear, etc., can be made by screwing the rod at the lower end of the tube further in or out and locking it with a check nut. The forked connection between the tappet rod and lever should be provided with a liberal bearing with an oil hole, and the bracket bearing should also be liberal and provided with an oil cup. Sometimes the adjusting means in this form of valve gear consists of a set screw passing through the end of the tappet lever over the valve stem, which bears against the end of the valve stem and is secured by a lock nut. In the latest designs of this type the valves and tappet levers are covered by a housing. In the Ferro eight cylinder engine shown in Plate XXII is used a tappet lever support which can be adjusted while the engine is running and without removing the valve gear cover.

Integral and Built-up Camshafts—The great majority of the camshafts used in modern automobile motors are forged with their cams integral in the drop press and are turned and ground to size in special machines. Some makers, however, prefer to make the cams separately and to fit them to the shaft. This method came somewhat into disrepute in earlier years because

of inaccurate fitting and securing the cams merely by taper pins, so that they would occasionally come loose. At present, when the cams are made separate they are generally fitted by means of keys and held from endwise motion either by spacers on the shaft or by taper pins. The integral construction is, of course, a better manufacturing method, since it does away with fitting, but the built up construction has the advantage that it permits of hardening the cams more evenly and avoids danger of distortion. This method is in use by some of the leading manufacturers.

Dimensions of Camshaft—The camshaft must be comparatively stiff and must be well supported, so that it will spring or give very little under the shock it receives when opening the valves. This shock is, of course, greatest in the case of the exhaust valve, which must be lifted from its seat against the pressure of the gases in the cylinder near the end of the expansion stroke (about 50 pounds per square inch, gauge). To this must be added the initial spring pressure and the inertia of the valve and push rod. In the case of the inlet valve only the last two items are to be counted with, as the valve does not have to be lifted against a pressure. The force required to lift the exhaust valve may be assumed to be 75 pounds per square inch of valve area. In Fig. 170 is shown a section of a camshaft of diameter d, whose length between the centres of adjacent bearing is l. Let the distance of the centre of the cam from the farthest bearing be $x\,l$. Then the flexure of the shaft at the centre of the cam under a total load P will be

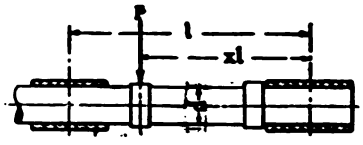

FIG. 170.

$$y = \frac{P l^3}{6 E I}(2 x^4 + 2 x^2 - 4 x^3)$$

(See Merriman, "A Textbook on the Mechanics of Materials," Fourth Edition, page 77). The coefficient of elasticity may be taken at 30,000,000, and the moment of inertia I of a full circular section is $\frac{\pi d^4}{64}$. Inserting these values in the above equation we have

$$y = \frac{P l^3}{8{,}800{,}000\, d^4}(2 x^4 + 2 x^2 - 4 x^3) \quad \text{(9)}$$

This deflection y should not exceed 0.002 inch. For con-

venience in using equation (91) the values of the expression in parentheses (=a) for values of x from ½ to 1 inclusive are given in the following table:

$x = 0.5$	0.55	0.6	0.65	0.7
$a = 0.125$	0.122	0.115	0.104	0.088
$x = 0.75$	0.8	0.85	0.9	0.95
$a = 0.069$	0.051	0.033	0.016	0.005

Suppose that in a 4 x 5 inch motor there are three bearings for the camshaft, and that the distance between centres of bearings is 10 inches. If all of the cams are on one side, there will be four cams between each pair of supports. Luckily the exhaust cams, on which comes by far the greatest thrust, will be close to the bearings, and it is a good plan to place them right alongside these. Supposing the bearing to be 3 inches long and the cam ½ inch wide, the distance from the centre of the cam to the centre of the farthest bearing would be 8¼ inches and the value of a would consequently be 0.04. The area of the valve port for a 1¾ inch diameter is 2.4 square inches, and hence the valve thrust is

$$2.4 \times 75 = 180 \text{ pounds.}$$

Substituting in equation (91) we have

$$0.002 = \frac{180 \times 10^3}{8{,}800{,}000\, d^4} \times 0.04,$$

hence

$$d = \sqrt[4]{\frac{180 \times 0.04 \times 10^3}{0.002 \times 8{,}800{,}000}} = 0.80 \textit{ inch.}$$

However, since the inlet cams are located much farther from the supports, they may cause the shaft to flex more than the exhaust cams, even though the thrust on them is much less. The maximum thrust on these cams may be taken as twice the mean spring pressure, say, 100 pounds. These inlet cams would be about 6¼ inches from the farthest bearing, consequently $a = 0.11$. Inserting in the above equation

$$d = \sqrt[4]{\frac{100 \times 0.11 \times 10^3}{0.002 \times 8{,}800{,}000}} = 0.89 \textit{ inch.}$$

Hence the camshaft should be, say, ⅞ inch in diameter, and its size is determined by the inlet cam thrust, rather than the exhaust cam thrust.

Camshaft Bearings—Camshafts for four cylinder motors may be supported in either three, four or five bearings. Theoretically it is possible to carry them in two bearings, but this would require a very heavy shaft and offers no practical advantages. With T-head motors one bearing may be placed at either end of the camshaft and one between the first and second

FIG. 171—CAMSHAFT AND ENLARGED BEARING BUSHINGS FOR SAME.

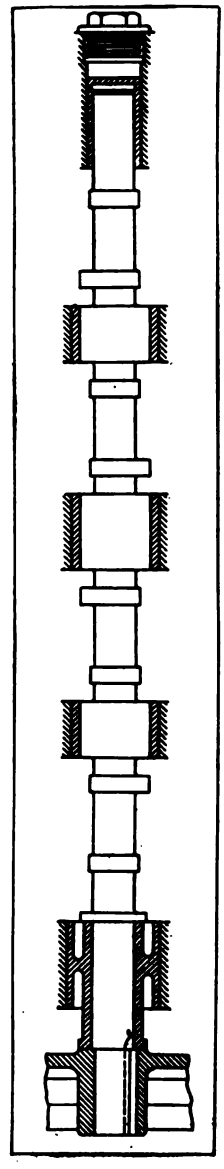

FIG. 172—CAMSHAFT WITH ENLARGED INTERMEDIATE BEARINGS.

and the third and fourth cams, respectively. In motors with individual or twin cylinders a bearing is sometimes provided on either side of the cams for each cylinder, making five bearings in all, but the most usual practice is to employ either three or four bearings.

In earlier years it was customary to place the camshaft bearing between the crank casing and a bolted-on housing. At present, however, a sort of tunnel is generally provided for the camshaft (two in case of a motor with two camshafts) in the crank case casting, with annular supports for the camshaft bearings. When a built-up camshaft is used all of the bearings can be made in a single piece and slipped over the shaft as it is being assembled, but in case the camshaft is of integral construction in order to be able to withdraw it from the camshaft tunnel, either the journal portions of the shaft must be made of such diameter that when the shaft is withdrawn lengthwise the cams will clear the bearings, or else the bearings must be made in halves and bolted together. The enlarged-journal principle is now most largely employed, and an example of this type of camshaft is shown in Fig. 172. A camshaft with journals of normal diameter and split bearing bushings is illustrated in Fig. 171. The end bearings are sometimes flanged and bolted to the end wall of the crank case, which is provided with a boss for the purpose.

The length of the camshaft bearings depends more or less upon the arrangement of the camshaft. Where three bearings are used on a four cylinder camshaft, the length of each bearing can be made two to three times the shaft diameter; with five bearings each can be made one and a half times the diameter. The front bearing, which carries the load due to the chain tension or gear tooth pressure, is often made somewhat longer than the others. Bearings of the separable type for the sake of weight reduction, are made in the form of an inner and outer hub connected by a thin web. Occasionally ball bearings are used on the camshaft, but this practice is rare, owing to the fact that the camshaft runs at comparatively low speed, its load is light and its lubrication is effected automatically. Where such bearings are used they are mounted in the crank case in the same way as plain bearings.

Manufacture of Cams—Camshafts with integral cams are drop forged from low carbon steel, and after being rough turned are cemented or carbonized at the cam portions, and then

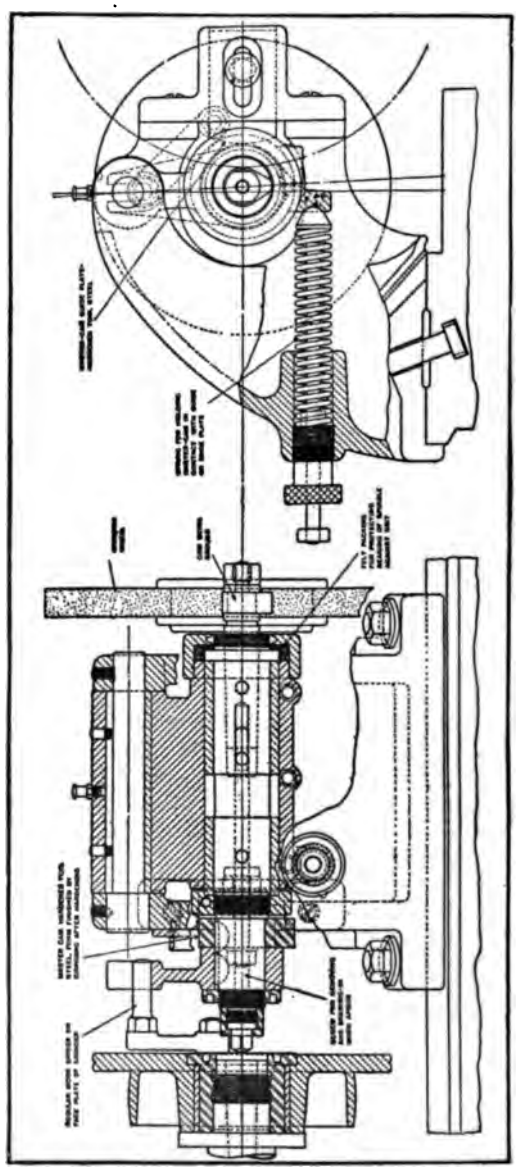

FIG. 173.—LANDIS CAM GRINDING ATTACHMENT.

quenched, so as to render the cam surfaces very hard and durable against wear. The cams are then ground in a cam grinding machine.

Cams designed to be secured to their shafts are made either singly or in pairs (with a hub extending between the two cams). Such cams are generally made from tool steel and hardened all through. Separate cams are practically always used when only a comparatively small number of engines of a given design are to be built, say not over 100, since in that case it does not pay to make the rather expensive dies for integral camshaft forgings. Of late, however, machines have been developed for either turning or grinding integral camshafts from solid rolled stock, at nominal cost.

A grinding machine attachment for grinding individual cams is illustrated in Fig. 173, and it may be pointed out that cam grinding machines designed to handle integral camshafts work on practically the same principle. The cam to be ground is secured on an arbor inserted into a spindle which carries the master cam at its other end. The spindle is carried in a head provided with an upwardly extending arm whereby it is swung from the body or frame of the attachment, which is clamped to the grinder frame. The swinging head is forced to one side by a coiled spring so that the master cam presses against a stationary shoe plate. The spindle carrying the cams is revolved by means of a work driving pin on the face plate of the machine engaging with the forked end of a driving arm on it. In order to make the necessary allowance for wear in the grinding wheel, a set of different master cam shoe plates are furnished with the attachment, which are inserted one after another as the grinding wheel wears down, all of the plates having contact surfaces of different curvature. The master cam can also be cut by means of this attachment from a template. A method has recently been developed of grinding the cam with the flat sides of the grinding wheel, whereby inaccuracies due to change in curvature of the grinding surface with wear are eliminated.

For grinding an integral camshaft it is necessary to first make a master camshaft with all of the cams correctly spaced angularly and longitudinally. This camshaft is driven in synchronism with the camshaft to be ground, and acts on a roller carried by a cross slide carrying the grinding wheel, the roller being drawn against the master cam by a spring acting on the cross slide.

The cam rollers and pins are generally made from tool steel and hardened.

In motors for pleasure vehicles great importance is now at-

tached to silent operation of the valves. The factors which enhance silent valve action are as follows: Small valve lift, light weight of lifted parts, careful design of cam outline so as to lift and seat the valve gradually, accurate adjustment of push rod for clearance and a stiff and rigidly supported camshaft. Valve housings filled with grease further enhance silence.

Compression Relief Cams—With large motors it is desirable to reduce the compression when starting the motor by means of the crank, since it takes a great deal of physical effort to turn over a large, multi-cylinder, high compression motor by hand against full compression. On some motors all of the cylinder pet cocks are connected together and can be opened simultaneously from a position convenient to the operator when about to crank the motor, whereby the effort required in cranking is, of course, greatly reduced. However, the more approved plan of relieving the compression for starting consists in providing the exhaust cams with an extra cam protuberance at one end and nearly opposite the main cam protuberance, which holds the exhaust valve open during the first part of the compression stroke.

The exhaust camshaft is so arranged that it can be slid lengthwise in its bearings, and the cams are made considerably wider than the width of the cam roller, so that when the camshaft is in its normal position the cam roller does not touch the relief cam. The camshaft is connected to an operating lever from which connection is made to a handle or other operating device in front of the car. A spring normally holds the camshaft in such a position that the relief cams are out of line with the cam rollers, but when the shaft is pulled forward by the operator the relief cams come in line with the cam rollers and the exhaust valves are held open not only during the regular exhaust period, but also during the first part of the compression period. The sides of the relief cam protuberances which the cam roller must mount are suitably inclined. A portion of an exhaust camshaft with relief cams and operating mechanism is shown in Fig. 174. At the forward end of the camshaft there is a short shaft, which is so connected to the camshaft that it does not need to turn with it, but that the camshaft must follow it whenever it is moved longitudinally. This short shaft is surrounded by a spring, which tends to keep the camshaft in its normal position. The forward end of the short shaft projecting through the cam gear housing cover is flattened and pivoted to an operating lever. The cam-

shaft should be fitted with a ball thrust bearing to take up the end thrust due to the spring.

Another common arrangement consists in surrounding the rear end of the camshaft with a coiled spring, which bears against the rearmost cam and the rear wall of the crank case respectively. One of the cams is formed with a groove for a sliding collar, with which engages a shipper lever secured to an operating shaft extending through the side wall of the crank case.

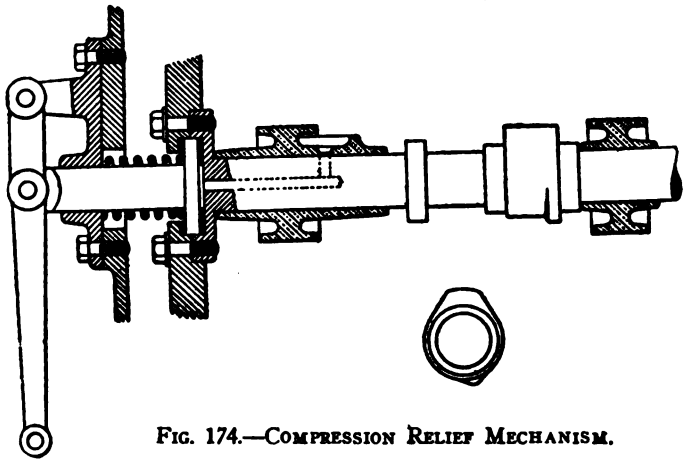

FIG. 174.—COMPRESSION RELIEF MECHANISM.

Concentric Valves.—Fig. 175 shows a design of concentrically arranged inlet and exhaust valves as used by the H. H. Franklin Manufacturing Co. in its air cooled motors for a number of years. At present no such valves are being used in automobile motors, so far as the writer knows. One advantage of these valves is that they permit of large valve opening areas in connection with a combustion chamber of cylindrical or nearly hemispherical form, which is desirable from the standpoint of thermal efficiency. Besides, the exhaust valve is cooled by the fresh charge coming in through the inlet valve, and is, therefore, not so easily pitted by the hot gases passing through it. The Franklin company discarded these valves apparently because they proved noisier than ordinary valves.

Auxiliary Exhaust Ports.—To insure the quickest possible escape of the exhaust gases, the cylinders are sometimes provided

with ports, known as auxiliary exhaust ports, which are uncovered by the piston just before it reaches the bottom end of the stroke. These ports are opened very quickly and allow the greater portion of the spent gases to escape before the piston completes its down stroke. Before it was discovered that the exhaust valve had to begin to open some 40 to 45 degrees before dead centre in order to insure the prompt clearing of the cylinder, and when one or two cylinder motors were the rule, these auxiliary exhaust ports were very extensively used, since it was found that if the exhaust valve opened only a little before the end of the stroke these ports considerably increased the engine power. However, when four cylinder engines came into use, a difficulty cropped up. When

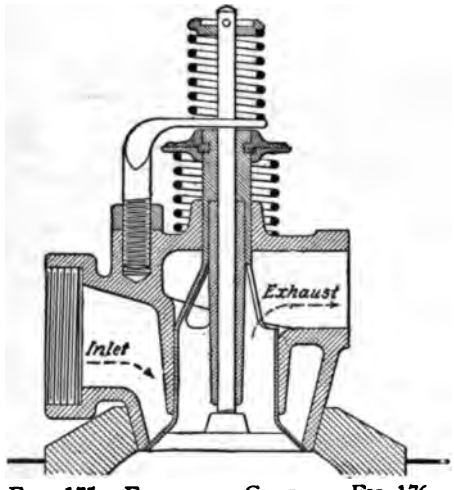

FIG. 175.—FRANKLIN CONCENTRIC VALVES.

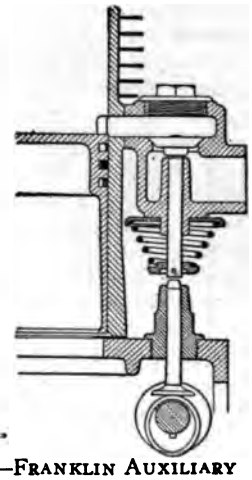

FIG. 176.—FRANKLIN AUXILIARY EXHAUST VALVE.

the burning gases are discharged through the auxiliary exhaust port of one cylinder into an exhaust pipe common to all cylinders, they may flow back through the auxiliary exhaust port of one of the other cylinders whose piston is at the moment at the end of its inlet stroke and has therefore also uncovered its auxiliary exhaust port. In that case the charge in the latter cylinder may be fired, straining and heating the engine without doing any useful work. In order to prevent this it is necessary to place a valve outside each of the auxiliary exhaust ports which will shut off communication between the port and the common exhaust pipe at the end of the inlet stroke.

At present the auxiliary exhaust port is used only on air cooled motors, where it has the great advantage that, since it permits the hot gases to escape quickly, it reduces the heating of the cylinder walls and particularly of the exhaust valve. The H. H. Franklin Manufacturing Co., which has used these auxiliary valves on its air cooled motors (see Fig. 176), states that only about 30 per cent. of the total quantity of exhaust gas passes through the regular exhaust valves, which begin to open only at the beginning of the exhaust stroke. These valves can, therefore, be made smaller than would otherwise be permissible; they need not be lifted against any pressure, and the strain on them and the consequent noise are much reduced. These advantages are obtained, however, at the cost of some complication, since an extra valve per cylinder is required. But these valves for the auxiliary ports need not be absolutely tight and need not be lifted against the pressure in the cylinder; consequently they do not require much care. The auxiliary ports should be made comparatively narrow, so they will not reduce the effective length of the power stroke too much, and be made to extend nearly half way around the cylinder, being divided by so-called bridges into a number of separate ports so the piston rings will not catch on the edges of the port. In racing and aeronautic motors the auxiliary ports often are in the form of holes drilled through the cylinder wall, the spent gases being discharged directly into the atmosphere.

Single Cam Valve Gear—It is possible to operate both the inlet and the exhaust valve of each cylinder by means of a single cam. This construction, which was first described in THE HORSELESS AGE of February 5, 1902, gained considerable prominence through its use on Fiat racers in 1906. The Fiat design is illustrated in Fig. 177. It will be seen that the two valves are located in the cylinder head at an angle of 30 degrees with the cylinder axis and are held down to their seats by a multiple leaf spring. They are opened by means of a rocking lever pivoted to a bracket screwed into the centre of the cylinder head, one end of which lever connects to a valve rod extending down the side of the cylinder and connecting with the cam follower at its lower end. This valve rod is surrounded by a coiled spring which is stronger than the flat spring holding the valves to their seats. It will be noticed that the cam has both a cam protuberance for opening the exhaust valve and a flat which allows the valve rod to descend below its normal position and the coiled spring to open the inlet valve against the pressure of the leaf spring. A similar valve arrange-

ment was used on Pope-Toledo stock cars in this country for some years. It has been urged against it that it does not permit of overlapping of the inlet and exhaust opening periods, but this overlapping does not seem to be desired anyhow.

Fig. 177 also illustrates another idea in valve construction which

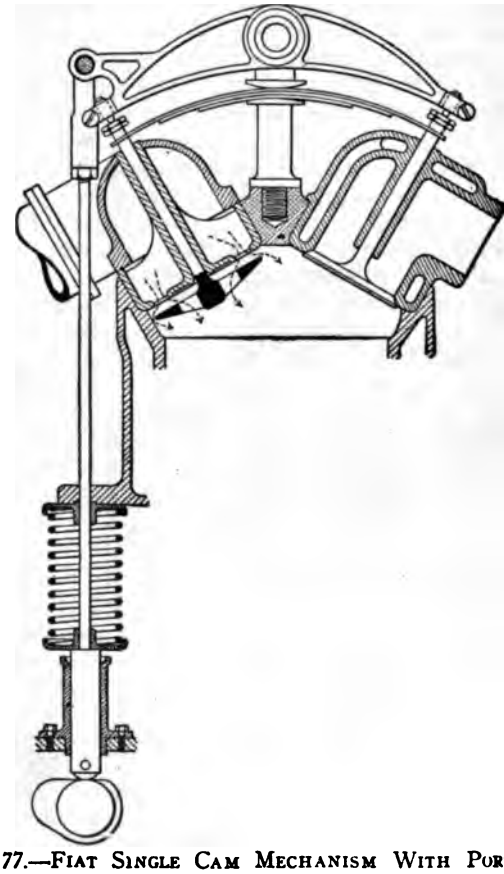

FIG. 177.—FIAT SINGLE CAM MECHANISM WITH PORTED INLET VALVE.

has been resorted to in racing motors in order to increase the power output. This is the ported inlet valve. It will be observed that the inlet valve head is provided with ports, so that the charge passing through the valve seat, instead of all passing around the outside of the valve head, comes partly around the circumference

and partly through the ports in the valve head. This design is a product of speed competition and has been used on racers only. Of late it has become customary to provide two inlet and two exhaust valves per cylinder in big racing motors.

Enclosed Valves—It is now the practice in pleasure car motors to enclose the whole valve mechanism, to protect it against dust and muffle its noise. En bloc motors frequently have their cylinders cast with a housing containing the valve springs and push rods which can be closed by means of a cover held in

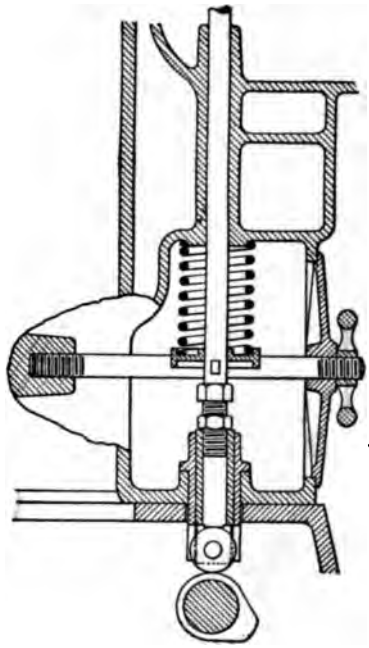

FIG. 178.

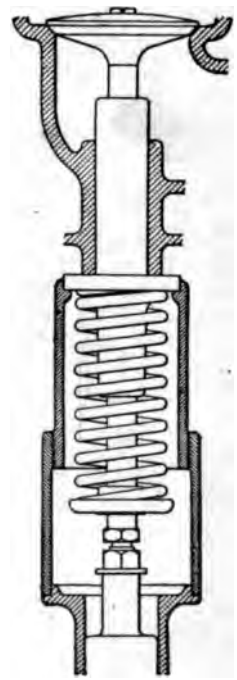

FIG. 179.

place by studs screwed into bosses cast on the cylinders, and nuts. Such a valve casing protects all of the more delicate parts of the motor, and gives the motor that "ironclad" appearance which has long been a feature of electric motors of the street railway and automobile types. A typical design of such a valve

housing is illustrated in Fig. 178. This motor is of the en bloc type, with integral inlet and exhaust passages. It has a flange cast along the under side of the valve box, and another flange extends sideways from the lower end of the casting. The latter flange, together with the valve box on top and two side walls at the ends of the cylinder block, forms a housing for the valves, which is closed by a large ribbed cover plate cast of aluminum.

Such valve housings are also occasionally provided in motors with twin cast cylinders, but the arrangement is then less advantageous, since four side walls are required, and the total weight of the housing is naturally greater. In order to attain practically the same end with less weight, protecting sleeves are sometimes placed over the valve springs. A design of such sleeves is shown in Fig. 179. Each valve spring is surrounded by two sleeves, the upper smaller diameter one screwing into the lower one. By partly unscrewing the smaller sleeve from the larger one, the ends of the sleeve are forced against flanges on the valve stem guide and the push rod guide respectively, whereby a dust-tight joint is insured. In putting the sleeves in place the smaller one is placed inside the larger one, and the two are held against the valve box from below, when the valve may be inserted and the spring and its retaining washer put in place, after which the larger sleeve may be lowered to its regular position. This latter method was used when valve covers first came into vogue, but is now practically obsolete.

CHAPTER XII.

CAMSHAFT AND ACCESSORIES DRIVES.

The camshaft receives its motion from the crankshaft, from which all of the accessories must also be driven. These accessories generally include a magneto, a water pump, an oil pump and a fan, and sometimes also a timer, an air pump and a lighting dynamo. The camshaft and accessories drives are generally combined, all of the parts deriving their motion from a single pinion on the crankshaft, so it will be advantageous to discuss the whole subject under one head.

There has for some time been a gradual evolution in the design of camshaft and accessories drives, which is still in progress. The object aimed at is quiet operation of the drives, combined with the most compact arrangement, and the greatest accessibility of the accessories. Formerly it was the general custom, where camshafts ran parallel with the crankshaft, to drive them by spur gears, and to have small spur gears for the magneto and water pump mesh with the camshaft gears. About 1909 helical camshaft gears were widely introduced on account of their more silent operation, and now the silent chain bids fair to come into use for this purpose for the same reason. In Europe it is now customary to drive the magneto and water pump by means of a cross shaft in front of the motor, driven from the camshaft through a pair of helical gears, and the same practice is finding favor in this country.

Arrangement of Drive—In Fig. 180 are shown a number of different arrangements of the drive for one or two camshafts located in the crank chamber, and for the chief accessories. *A* depicts an arrangement which is now practically obsolete, but was used a good deal in the early years of four cylinder motors. Each of the two camshafts is provided with a large diameter spur gear, meshing directly with a pinion on the crankshaft. (It may be pointed out that in this, the same as in all other diagrams in Fig. 180, the crankshaft is indicated by a large black

circle, and the camshafts are indicated by small black circles.) With the right hand camshaft gear meshes a small gear for driving the pump and magneto. On a four cylinder motor the magneto must be driven at crankshaft speed, and the magneto gear therefore has the same number of teeth as the crankshaft pinion. The reason that this arrangement of camshaft gears has been given up is that it necessitates the use of gears of very large pitch diameter, resulting in very high pitch line velocities, and it is very difficult to make gears running at a high pitch line velocity operate silently.

For T-head motors an arrangement like that shown at *B*, or one similar to it, is now generally used. The pinion on the crankshaft meshes with an idler gear of equal or slightly greater pitch diameter, which in turn meshes with the two camshaft gears. A comparison with arrangement *A* shows at once that the gears and pinions of arrangement *B* are much smaller, and with an equal engine speed the pitch line velocity is much less. In this case the magneto is located on the left hand side of the motor, and the pump on the right hand side, and each has to be driven by a separate gear meshing with one of the camshaft gears.

At *C* is shown a camshaft drive by means of silent chains as successfully used by the Humber firm in England on T-head motors. There are two driving sprockets on the crankshaft, which connect by a silent chain each with a driven sprocket on each of the two camshafts. The right hand camshaft carries in addition to the sprocket through which it receives its motion a driving sprocket for transmitting motion by a third silent chain to the driving shaft for the pump and magneto. At *D* is shown a silent chain drive for a motor with all valves on one side, and with the pump and magneto located on the side opposite to the valves.

Diagram *E* shows an arrangement of the camshaft and accessories drives which has lately come into considerable favor abroad. Most of the new European motors are of small size, and of the L-head type. The camshaft is driven from the crankshaft directly through a pair of spur gears. On the camshaft is mounted a helical gear meshing with another helical gear on a cross shaft above it, which drives the magneto at one end and the pump at the other.

At *F* is shown the camshaft drive employed on the Winton Six. The crankshaft pinion meshes directly with the camshaft gear, which latter in turn meshes with a small gear for the magneto and pump, and with an idler transmitting motion to a

driving gear for the fan. This being a six cylinder motor, the magneto is required to run at 1½ times crankshaft speed, and the magneto gear, therefore, has only two-thirds the number of teeth of the crankshaft pinion. The fan is driven at twice crankshaft speed.

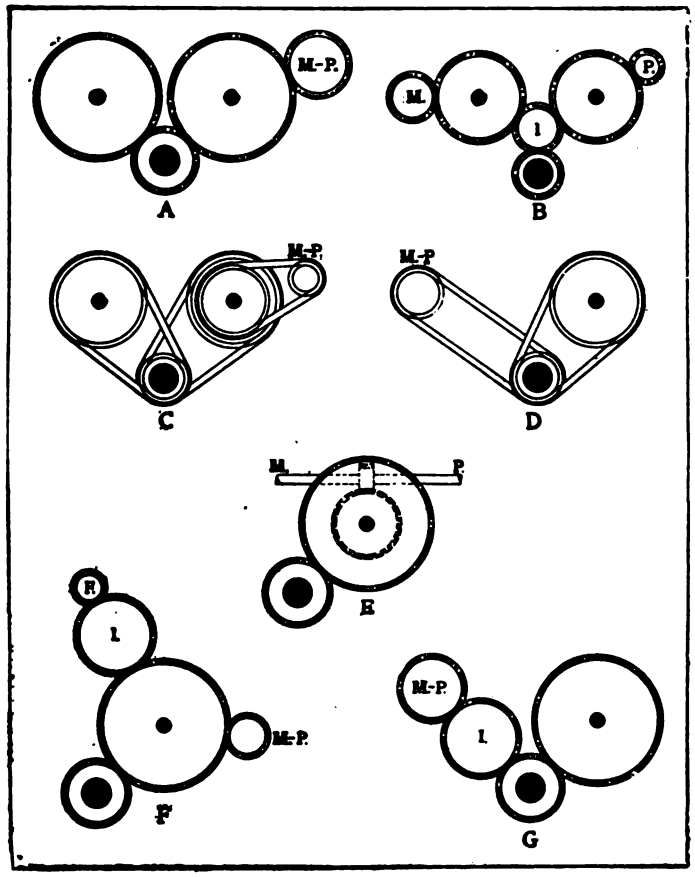

FIG. 180.—DIAGRAMS OF CAMSHAFT AND ACCESSORIES DRIVES ON ENGINES WITH ONE OR TWO CAMSHAFTS IN CRANK CASE.

In L-type engines both the magneto and pump are generally located either at the valve side, or at the ends of a cross shaft in front, but in a few instances they are located on the side opposite the valves, and a drive like that shown at *G*, with an

idler between the crankshaft pinion and the magneto and pump gear may then be used.

Engines with overhead camshafts are very rare in this country, but are used to quite an extent in Europe, in Germany particularly on truck motors. Two arrangements of the camshaft drive for motors with overhead camshafts are shown in Fig. 181.

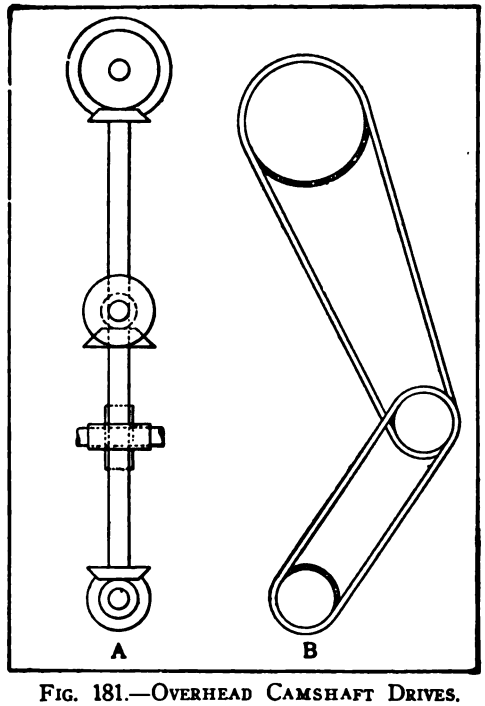

FIG. 181.—OVERHEAD CAMSHAFT DRIVES.

That shown at *A* is employed on a German truck motor. There is a vertical shaft at the front of the motor driven from the crankshaft by a pair of mitre gears, and driving the camshaft through a set of bevel gears in the ratio of 1 to 2. A cross-shaft for the magneto and pump is driven from the vertical shaft through a pair of helical gears at a ratio of 1 to 1. The vertical shaft also drives the fan through a pair of bevel friction wheels, and in addition carries the governor which, however, is not shown in the sketch.

At *B* is shown the silent chain drive for the Germain overhead camshaft engine. One silent chain runs from a sprocket

on the crankshaft to a sprocket on a short shaft on the side of the cylinders from which the water pump and magneto are driven, and a second silent chain runs from a second sprocket on this short shaft to the sprocket on the camshaft. The first three sprockets are of equal size, but that on the camshaft has twice the number of teeth as the others. Both of the overhead camshaft driving gears here described are completely enclosed.

Dimensions of Camshaft Gears—Since the camshaft or shafts must rotate at one-half the angular speed of the crankshaft, the driven gear must have twice the number of teeth as the crank shaft pinion. If spur or helical gears are used, the teeth are generally of eight pitch, and the gears are made of a width of face

$$w = \frac{b}{8} + \frac{3}{8} \textit{ inch} \qquad (92)$$

This may be increased by one-eighth to one-quarter inch in the case of truck or other motors intended for services in which weight is not of very great importance. The driving pinions are made of steel, and the camshaft gears of cast iron or bronze. Unless they are carefully made, these gears may be a source of considerable noise. It is with the object of reducing this noise that gears cut with helical teeth having a tooth angle of 30 degrees or thereabout have been largely substituted in recent years for plain spur gears. The form of the web of the gears also has some effect on the noise. Occasionally the camshaft gears are cast with regular spokes, but more generally they are formed with a web of about one-quarter the thickness of the face of the gear, and with a number of large circular holes evenly spaced.

The most secure method of fastening the camshaft gear to the shaft consists in providing the shaft with an integral flange and bolting the gear to it, and this method is employed in a number of motors used on cars of the highest grade (see Fig. 182, *A*). However, the more

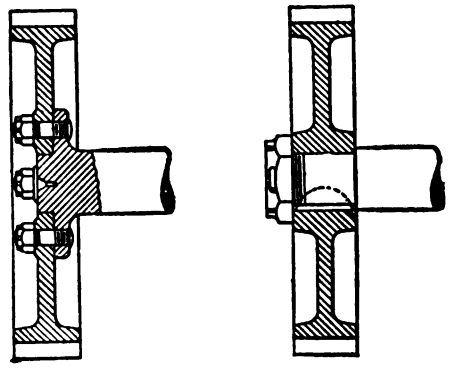

A. FIG. 182. B.

common method consists in fitting the gear by means of one or two Woodruff keys against a shoulder on the shaft, either on a cylindrical or a tapered seat. When a tapered seat is used the shaft is always drawn to it by means of a special nut of comparatively small thickness. Such a nut is sometimes also used in connection with a cylindrical seat, as shown at B, Fig. 182, though it is not necessary if the gear is prevented from drifting on its shaft by means of the housing. Again, the gear may be fastened to its shaft by means of one or two taper pins. It is essential, of course, that the gears be fitted to the shaft with great accuracy, so far as their angular relation is concerned, so that the valves may be properly timed. Some manufacturers provide an adjustment by making the camshaft gear with a separate flanged hub, and bolting the web of the gear to the flange of the hub by three bolts, the bolt holes in one of the parts being oblong so as to permit of angular adjustment. When a helical spur gear drive is used provision must be made to take up the end thrust on the camshaft.

Silent Chain Camshaft Drives—When silent chains are employed for driving camshafts, the ½ inch pitch size is usually selected, though for small engines or for driving accessories only, the still smaller pitches made by one or two of the manufacturers of these transmission devices will serve. As regards the width of the chains to be used, the manufacturers of the Renold chain recommend a one-half inch pitch chain 1.4 inches wide for engines of 4 inch bore or less with a single camshaft, and 1.2 inches wide for double camshaft engines. For engines of more than 4 inches bore chains of the same pitch, and of 1.4 and 1.7 inches width for single and double camshafts respectively, are recommended. If a smaller size is selected, provision must be made for adjustment, on account of the more rapid wear of the smaller chains.

Recently triangular chain drives have been extensively adopted, the chain running over sprockets on the crankshaft, the camshaft and the accessories drive shaft, and an adjustment is generally provided in connection with such drives, most frequently on the accessories drive shaft. Fig. 183 illustrates such a triangular drive. As regards sizes, it may be stated that the engine is of the twelve-cylinder type, the cylinder dimensions being 3 x 5 inches, and the chain is of ½-inch pitch and 1½ inches width. Adjustment is made by means of an eccentric bushing on which the sprocket pinion revolves. The accessories drive shaft passes through this bushing and connects to the sprocket by a jaw clutch pinned

to the shaft. The bushing is supported in a hub in the chain housing. For adjustment the bushing is turned in its support, and is then clamped in position, as shown. This method of chain adjustment originated with the Morse Chain Co.

One of the points in connection with silent chain drives concerning which there has been considerable discussion is the effect of wear or stretch in the chain on the timing of the valves. In the design shown in Fig. 183 the crankshaft sprocket has 21 teeth, and the camshaft sprocket 42 teeth,

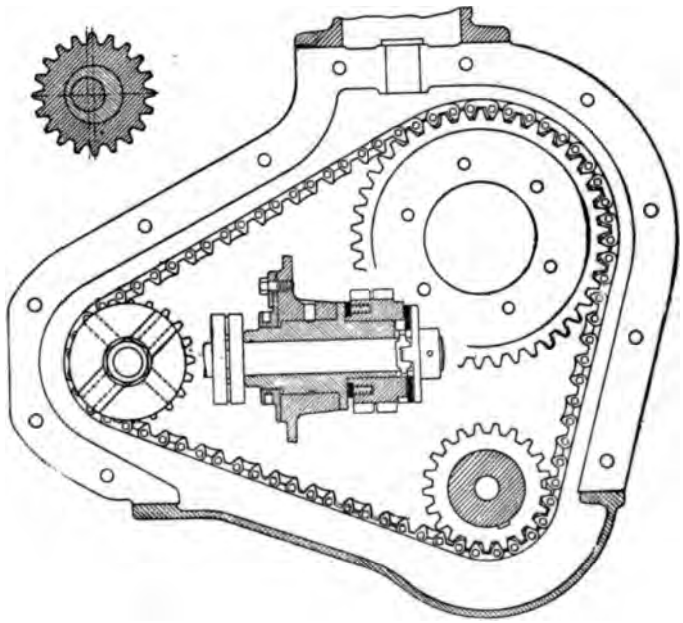

FIG. 183.—METHOD OF ADJUSTING TRIANGULAR CAMSHAFT DRIVE

the center distance being 6.406 ins. The chain has 79 links. The adjustment will take care of a lengthening of one link, when the odd link furnished can be removed and the adjustment set back to zero, thus allowing for lengthening of another link, or ½ in., making a total of 1 inch. Thus provision is made for a lengthening of 1 inch in seventy-nine links or 0.01265 inch per link, the crank sprocket being 3.355 inch, and the cam sprocket 6.691 inch pitch diameter. The wheels are on 6.406 inch centers, there are 13 links in the tension

run to the camshaft wheel, and thirteen times 0.01265 inch equals 0.16445 inch as a total, which in itself permits of a lag in the timing of approximately 2.8 deg. In lengthening this amount the chain has climbed radially 0.084 in. on the larger, and 0.042 in. on the smaller wheel, and this has permitted the wheel to lag 0.072 in., equaling 1.2 deg., or a total for both causes of 4 degrees.

Whipping.—A silent chain of certain dimensions has a natural period of vibration, and if this period happens to be

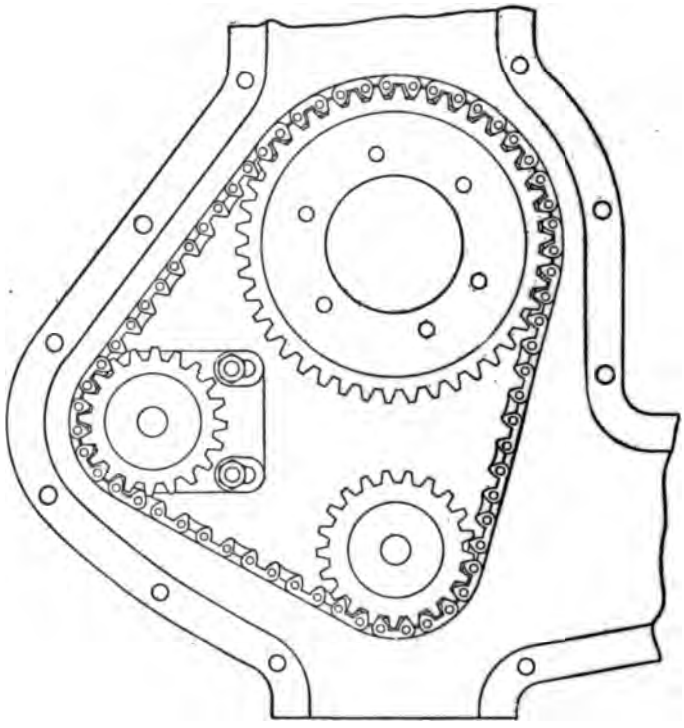

FIG. 184.—ADJUSTING SILENT CHAIN BY MEANS OF IDLER WHEEL.

equal to the period of some vibrating force in the engine at any speed within the normal range of engine operation, destructive whipping is likely to be set up. If the chain centers cannot be altered this tendency to whip may be overcome by changing either the depth of the arc or the weight and tension of the chain.

Another arrangement, where only the camshaft is driven

directly from the crankshaft, is to introduce an idler sprocket for purposes of adjustment. The shaft of this sprocket is carried in a slide which is bolted to the crankcase wall, and by means of elongated bolt holes can be moved closer to or farther away from the line of centers of the driving and driven sprockets. This is illustrated in Fig. 184.

Rules for Silent Chain Drive Design.—The following rules for guidance in the design of silent chain camshaft drives were given by F. L. Morse in a paper presented to the S. A. E., Indiana Section:

(1) The triangular drive is cheaper than double drives and takes less room; (2) use the shortest centers possible between crank and camshaft; (3) drive from crankshaft to camshaft, and then to accessory shaft, not to camshaft through the accessory shaft; (4) chain wrap should be not less than five teeth; (5) provide adjustment, generally easiest on the accessory shaft; (6) use an odd number of links in the chain, and an odd number of teeth in the crankshaft and accessory drive shaft sprocket when possible; (7) provide an oil lead from the general oiling system leading to the inside of the chain; (8) design the chain case so that the chain can be made endless, and when on, the wheels can be put in place; (9) if adjustment is provided without taking off the gear-case, provide a convenient means of feeling the chain to adjust to the right tension. Sufficient room must be allowed in the chain case so that in the event of chain breakage the chain can pile up at the lowest point of the housing without danger of injuring the housing. This requires a space between the top of the tooth and the housing slightly greater than the depth of the chain. The housing should have a clearance of 1½ inches on the slack side of the chain.

A simple method of accurately timing the valve gear (which can also be used where the camshaft drive is by spur or helical gears) is illustrated in Fig. 185. The sprocket on the camshaft is provided with a dummy hub, and the flange on this hub and the web of the sprocket are each provided with three oblong holes inclined against each other, through which are passed clamping bolts. By removing these clamping bolts farther in toward or out from the camshaft the sprocket will be moved angularly with relation to the camshaft, and thus the timing changed.

Magneto and Pump Couplings—Both the magneto and the water pump have their own shafts, which must be connected to the driving shaft or shafts by some form of coupling. For

driving the pump, a slightly flexible coupling is considered advantageous by some designers, for the reason that if any solid particles should accidentally get into the pump, a flexible drive would not be injured as easily, and if the pump should ever freeze up the flexible member might protect it against injury when the motor is turned over. In the case of both drives, it is well that the coupling allow of a slight disalign-

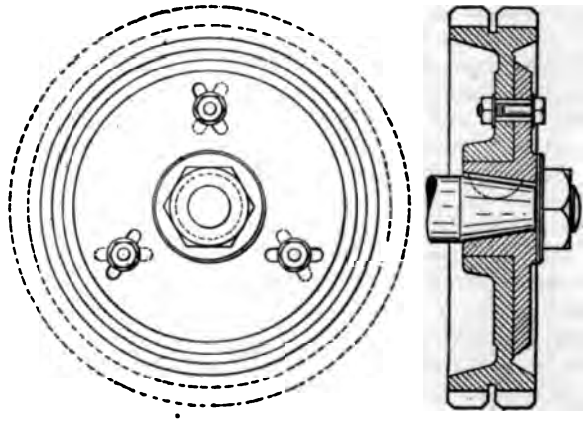

FIG. 185.

ment of the two shafts connected, since it is very difficult to get these shafts absolutely in line with each other.

In Fig. 186 *A* shows the leather type of coupling, which insures absolute silence of operation. It consists of two brackets at right angles to each other, secured by pins, keys or set screws to the driving and driven shafts, respectively, between which is located a circular disc of leather, to which the brackets are secured by bolts. At *B* is shown the Bosch flexible coupling for magneto driving. This consists of a cylindrical steel block with a hub by which it is secured to the armature shaft. In the cylindrical block are cut two radial slots which are lined with fibre on their sides. To the driving shaft is secured a flange carrying a flat cross-bar, consisting of a large number of thin leaves of spring steel. This cross-bar fits in the slots of the cylindrical member. It has a marked spring action, and provides for the slight relative torsional movement between the two members of the coupling resulting from the varying resistance of the magneto armature in the course of its rotation. It also has a

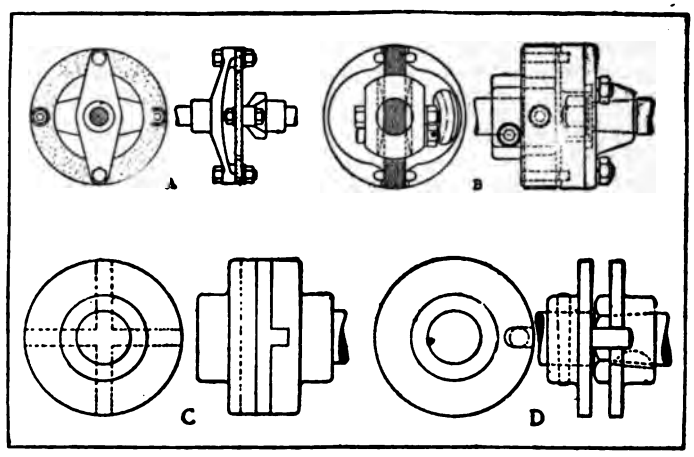

FIG. 186.—PUMP AND MAGNETO SHAFT COUPLINGS.

slight bending or twisting motion sideways, thus permitting the two shafts to be slightly out of line.

The form of coupling most extensively used for this purpose is the Hookham joint, shown at *C*. This consists essentially of three discs, the two outer ones of which are formed with hubs and keyed or pinned to the driving and driven shafts, respectively. The adjacent faces of these discs are cut with diametrical slots, and between the two discs is located a floating disc with tongues on opposite sides at right angles to each other, which

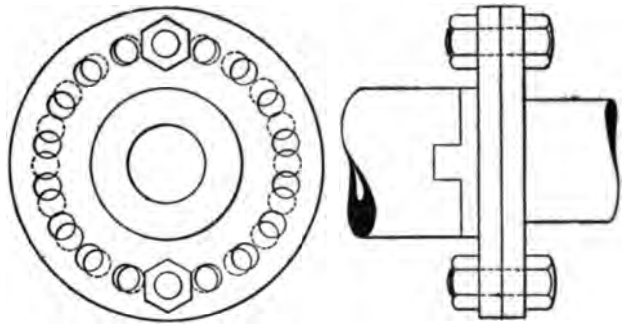

FIG. 187.—ADJUSTABLE FLANGED COUPLING.

tongues exactly fit into the grooves in the outer discs. It will readily be seen that this form of coupling permits the two shafts to be out of centre without causing any binding in the bearings.

A simple form of magneto coupling is that shown at *D*, which consists merely of two flanged hubs secured to the driving and driven shafts, respectively. One of the flanges is cut with a radial slot, and the other is provided with a substantial pin engaging with the slot. The slot is of the exact width of the pin, and of such depth that the pin does not bottom in it.

Some designers merely use very long driving shafts of comparatively small diameter, which they couple to the magneto or pump by means of ordinary flanged couplings. A flanged coupling permitting of very close angular adjustment of the magneto is shown in Fig. 187. The two flanges are drilled with holes closely spaced all around their circumference, one of them having two holes more than the other. The flanges are secured together by means of two bolts passed through holes at opposite ends of a diameter, and by moving these bolts from hole to hole the angular relation of the driving and driven parts will be slightly changed. Thus if one flange has 20 and the other 18 holes, the driven member can be advanced or retarded in steps of 2 degrees relative to the driving member.

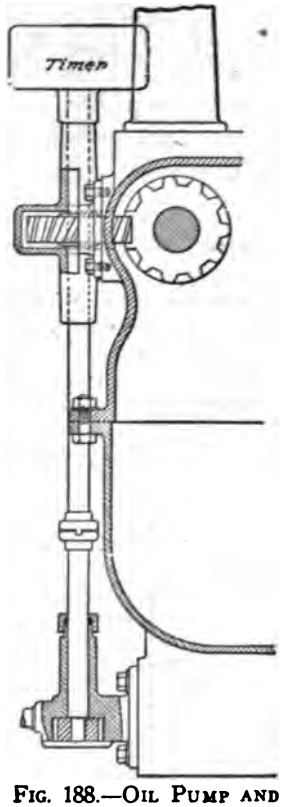

FIG. 188.—OIL PUMP AND TIMER DRIVE.

Oil Pump and Timer Drive—The oil pump may be located at the side of the oil well at the bottom of the crank chamber, and is most conveniently driven through a vertical shaft. The timer, on the other hand, should preferably be located high up at the side of the cylinder, so that it will be accessible and the connections from it to the spark plugs will be short. It is, therefore, also driven by a vertical shaft, and in quite a number of cases the same shaft serves for the oil pump and

the timer. Fig. 188 illustrates the arrangement. The timer must be driven at camshaft speed, and hence the gear ratio of the pair of helical gears by means of which it receives its motion from the camshaft must be 1:1. The driving pinion must be of small pitch diameter because it has to pass through the camshaft tunnel. This makes it difficult to get the centre of the vertical shaft sufficiently far from the centre of the camshaft, so that all parts will clear the crankcase, and in order to obviate this difficulty some designers use two sets of helical gears for the vertical shaft drive, employing a short horizontal intermediate shaft. The timer is also occasionally driven by bevel gears from the rear end of one of the camshafts. Some form of universal coupling, usually a simplified Hookham joint, is interposed between the drive shaft and the pump shaft. The timer, as a rule, has no shaft of its own, but is made with a hub which fits over the driving shaft at its top end. It must not be overlooked that when the camshaft carries helical or bevel pinions it is subject to end thrust and should be provided with thrust bearings, preferably of the ball type.

In pleasure cars, which now are commonly fitted with electric lighting and starting equipment, provision must also be made for driving the generator and for transmitting the drive of the starter to the engine. Unless the generator and starting motor are one and the same machine, the starter generally drives through the flywheel. Gear teeth may be cut on the rim of the flywheel, especially if the latter is made of cast steel, or else a steel gear ring may be bolted to the flywheel. A pinion either on the armature shaft of the starter but more generally on an intermediate shaft is drawn into mesh with the flywheel gear, this enmeshing operation being performed either through direct connection of the sliding pinion with the starter switch button, or through the action of a solenoid or of a threaded shaft and inertia weight. When the flywheel is encased an opening must be left in the housing over which the starter can be bolted.

Electric generators are driven in the same way as magnetos, being placed at the side of the engine and connected by a leather or other coupling with a shaft extending into the timing gear housing. When both a magneto and generator are used the two are sometimes coupled together, thus employing the same drive for both. The speed of the generator is then fixed by that of the magneto.

Air pumps for tire inflation may be driven off the magneto or generator drive shaft. The gearing for these air pumps may be

left exposed as it operates only while the car is standing. A positive clutch is provided for throwing the pump in gear when it is desired to inflate. Air pump bases, shaft heights, shaft ends, etc., have been standardized by the Society of Automobile Engineers.

CHAPTER XIII.

CRANK CASE AND OILING SYSTEM.

The crank case in an automobile motor serves as the main structural part which carries the cylinders and the crankshaft and is in turn supported upon the vehicle frame. It also forms a housing for most of the important working parts of the engine, protecting them against dust and splashing mud, and it performs important functions in connection with the lubrication of the motor.

The crank case generally forms a substantially cylindrical housing sufficiently large in diameter to enable the crankshaft with the connecting rod heads to rotate freely within it and sufficiently long to accommodate all of the cylinders of the engine. It is provided with circular openings over which the cylinder castings are bolted, with bearings for the crankshaft and camshaft, and with supporting arms by means of which it is carried on the main frame or a subframe.

Materials—Practically all crank cases for pleasure car motors are cast of aluminum, which is used on account of its low specific gravity. In reality, not pure aluminum, but alloys containing a large percentage of the metal are used, as pure aluminum has not sufficient strength for the purpose. One of these alloys, containing about 8 per cent. of copper, has a tensile strength of 18,000 pounds per square inch. Another, containing 3 per cent. of copper and 15 per cent. of zinc, has a tensile strength of 22,000 pounds per square inch. The latter (specific gravity = 3) is, however, somewhat heavier than the former, requires more care in casting and is more liable to shrinkage strains, which in part makes up for its somewhat greater tensile strength. One or two makers use manganese bronze for that part of the case which carries the crankshaft bearings and has the supporting arms cast integral with it. This alloy has a tensile strength of from 65,000 to 70,000 pounds per square inch, an elastic limit of about half these figures, and a specific gravity of 8.5 The crank cases of

commercial vehicle motors are generally made from cast iron, because the reduction in weight which it would be possible to secure by means of aluminum does not compensate in this case for the additional cost. In motors of the double cylinder opposed type the crank cases are sometimes parted in the middle and each half is cast integral with its respective cylinder, and in four cylinder en bloc motors the upper half of the crank case is also sometimes cast integral with the cylinder block, in which cases these parts are necessarily of iron.

One and Two Cylinder Crank Cases—Crank cases for single cylinder vertical motors are generally made in halves joined in a plane perpendicular to the crankshaft axis. The crank cases of double cylinder opposed motors can be arranged in different ways. It has already been pointed out that occasionally they are parted in a vertical plane and each half is cast integral with the corresponding cylinder. They may also be cast in halves parted in a vertical plane through the crankshaft centre, with the cylinders bolted on. Then, they may be cast in halves parted in a horizontal plane or cast in box form with one or two removable circular end plates.

A crank case design for a double cylinder opposed motor is shown in Fig. 189. This type of motor is used chiefly for light commercial vehicles, and the crank case is made of cast iron. The main portion of the case is cast in a single piece, with openings on opposite sides for the cylinders—an opening at one end through which the crankshaft can be introduced, and an opening on top through which the camshaft with its gear may be put in place. In double cylinder opposed motors the valves are generally placed on top. It was formerly customary to carry the crankshaft and push rods on a removable top plate, so the whole valve mechanism could be removed together, but this construction is patented, and since the patent on it has been sustained it has been given up by some manufacturers. Now the crank case is generally provided with square slots on top into which the cam shaft bearings fit and which are closed by the top plate. The push rod guides are forced into bosses cast integral with the case.

When one end of the crank case is cast integral the opening at the other end must be of a diameter slightly greater than the largest diameter of the crankshaft. With such a large opening the flange of the end plate comes uncomfortably near the bearing boss for the camshaft, unless the camshaft is placed at a greater distance from the crankshaft than would otherwise be necessary. To avoid this difficulty, removable end plates can be used on both ends and the crankshaft "wriggled" into place be-

fore either end plate is bolted to the case, in which case the end plates can be of smaller diameter. Another problem that arises with engines of this type, especially if of relatively long stroke, is that the distance between the crankshaft and camshaft is greater than the required distance between the cylinder centre and valve centre. This is due to the fact that in this type of engine the line connecting the crankshaft and camshaft is at right angles to the cylinder axis, whereas in a vertical motor it makes angles of from 45 to 60 degrees with that axis. This makes it necessary to either place the valve chamber farther from the cylinder axis, thereby increasing the length of the valve passage,

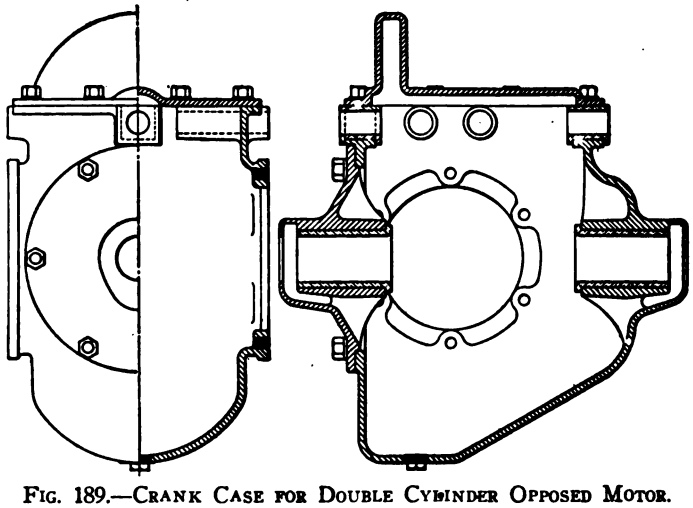

FIG. 189.—CRANK CASE FOR DOUBLE CYLINDER OPPOSED MOTOR.

and, consequently, the compression space wall area, or to offset the valves from the camshaft centre and provide the push rod with a sort of overhanging striker.

Four and Six Cylinder Crank Cases—In crank cases for four or six cylinder vertical motors there has been a gradual evolution from the earliest crude designs, which made it practically impossible to adjust the crankshaft bearings and difficult to get at the crank pin and wrist pin bearings. Fig. 190 shows a design which was once much used, but is now obsolete. The crankshaft bearings are formed between the lower and upper halves of the case, and the upper half is cast with the supporting arms and with hand holes through which it is possible to get at the connecting rod cap bolts for the purpose of adjusting them.

This design of case is, of course, very rigid, but, on the other hand, its manufacture involves a number of difficulties. The boring tool cannot be observed by the workman while the intermediate bearing is being bored, that is, just when the strain on the boring bar is greatest. In fitting and scraping in the bushings the case must be repeatedly taken apart and assembled again, which adds to the cost of manufacture. The only way

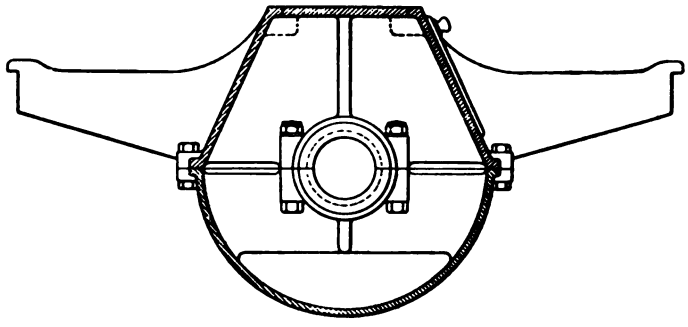

FIG. 190.—BEARINGS BETWEEN HALVES OF CASE.

in which wear in the crankshaft bushings can be taken up is by placing shims between the bushing and the bearing hub—a rather unsatisfactory method. In order to get at the crank case bearings, the crankshaft, flywheel, connecting rod and pistons have to be dropped, and altogether the adjustment of the bearings of this type of case is a most difficult problem.

A somewhat similar design, in which the crankshaft bearings are formed between the two halves of the case and the supporting arms are cast on the lower half, has been used by the German Daimler Company. The general design is illustrated in Fig. 191. This type of case possesses special advantages where the motor is mounted on the car in such a way that the bearings cannot be gotten at from underneath, as where it is located over the front axle. In order to take up and scrape any of the crankshaft bearings, the upper half of the case and cylinders can be removed together as a unit. The workman then has access to all of the principal working parts and can work upon them with comfort. The pistons, piston rings and connecting rods can be inspected and changed without disturbing the crankshaft bearings. In adjusting and scraping the crank pin bushings the connecting rods can be swung through a half circle. If the crank-

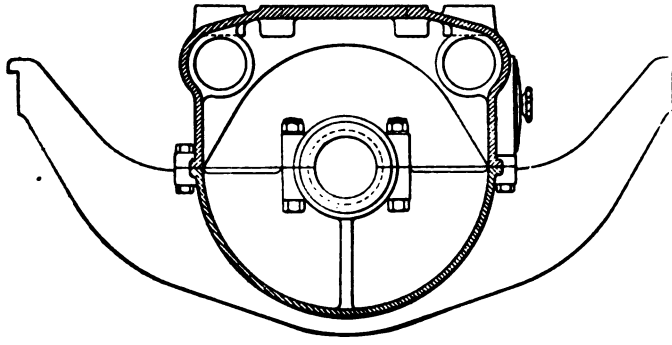

FIG. 191.—BEARINGS CARRIED BY LOWER HALF.

shaft bearings require adjustment the lower half of the case need not be disturbed, unless a new bushing is needed.

What is undoubtedly the most extensively used type of crank case at the present time is illustrated in Fig. 192. All of the crank bearings are entirely supported from the top half, and the lower half of the case serves only for the protection of the working parts against dust, etc., and to contain a supply of lubricant. This makes it possible to run the motor for short periods with the lower half of the case removed, so all of the bearings can be thoroughly examined and any necessary adjustments made with the greatest convenience. When this form of construction was first adopted the lower half was made in the form of a semi-cylindrical pan with partition walls between the

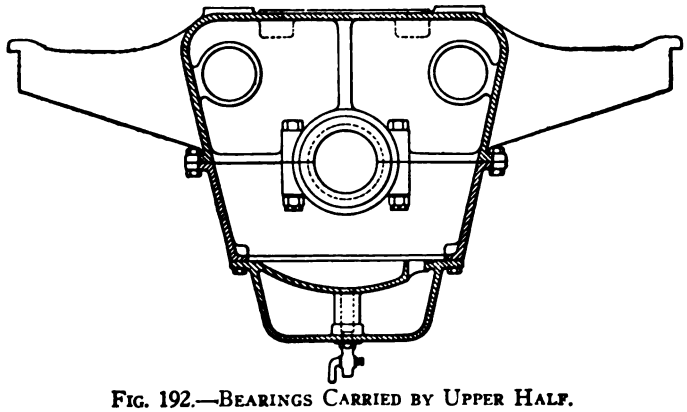

FIG. 192.—BEARINGS CARRIED BY UPPER HALF.

crank pits from 1 to 2 inches high, so that not all the oil would run to one end of the case when the car was ascending or descending a grade, but lubricating systems have recently undergone considerable change, and what is known as the pump circulating system is now almost universally used. This involves the use of oil troughs directly underneath each crank, in which the oil is kept at a constant level by means of overflow pipes, and an oil well or sump beneath these troughs in which the overflowing oil accumulates. The oil trough and the oil well may both be cast integral with the lower half of the crank case, but the more usual plan is to form the troughs in the lower half and make the oil well a separate casting bolted to the lower half. Another alternative consists in casting the oil well integral with the lower half and inserting into it the troughs, which in that case may be made of sheet metal. In small motors the entire oil well is sometimes made of pressed steel.

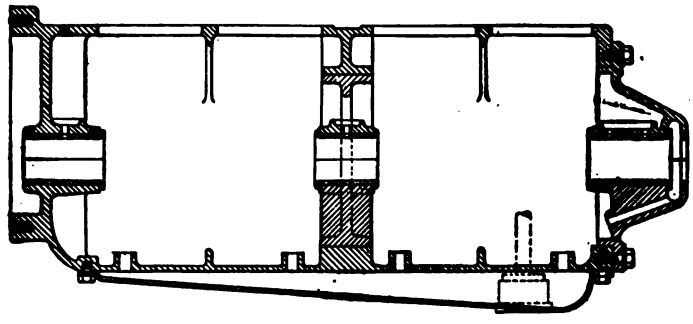

FIG. 193.—BARREL TYPE OF CRANK CASE.

In a considerable number of engines the crank cases are made in barrel form; that is, the main portion of the case is made a single casting, with openings for circular bearing plates, for the cylinders and for inspection purposes. A case of this type is shown in Fig. 193. The advantage of this construction is that with a certain weight of metal it gives the most rigid case. The inspection holes may be either at the side or in the bottom, but if there is an oil well at the bottom they must be at the sides. The only valid objection which can be raised against this form of construction is that in order to remove the crankshaft it is necessary to take the engine out of the car. Some crank cases of this type have been made of such relatively large size, and with such large handholes on the side, that piston and connecting rods could be removed through these handholes without dis-

turbing other parts of the motor, but in general it would be considered that the end did not justify the means.

General Design—The length of the crank case depends, of course, upon the size and form of the cylinders, crankshaft and crankshaft bearings. The size of the crankshaft and its bearings can be determined by means of the rules laid down in the chapter on Crankshafts. The crank case must allow of the free rotation of the crankshaft with the connecting rod heads, which calls for a substantially cylindrical form. However, if the camshafts are to be placed in tunnels formed in the casing it is necessary to depart somewhat from a cylindrical form, since these shafts must necessarily be outside the circle described by the outermost points of the crank, and if the crank case were to be made a cylinder of such a diameter as to enclose the camshaft, it would be unduly bulky. Moreover, with fairly long connecting rods it is advantageous to bring the flange to which the cylinder bolts considerably higher above the crank case centre than the maximum radius of the crankshaft. The oil well at the bottom also alters the external contour of the case, but need not affect the cylindrical form of the crank case proper.

The cylindrical form is advantageous not only because of its weight economy, but on account of its strength. The crank case does not lend itself well to mathematical treatment, but must be designed by the use of good engineering judgment. The main stresses to which it is subjected are as follows: When the explosion takes place in one of the cylinders the cylinder, owing to the reaction of the explosion on its head, tries to pull away from the crank case, exerting a stress on the cylinder bolts, the crank case bosses into which they are secured and those parts of the crank case between these bosses and the lower halves of the crankshaft bearings which take the direct thrust of the explosion. The torque reaction of the motor attacks the crank case also through the cylinder bolts and strains particularly the supporting arms and the parts intermediate between the cylinder flanges and the arms. Any "weaving" of the frame tends to break off the arms and twist the crank case. In the design of the crank case we must carefully consider each of these different stresses.

In the first place the cylinders must be firmly secured to the crank case. It is not well to depend upon screw threads in aluminum for this connection, and one or the other of the fastening means shown in Fig. 194 is usually employed. The construction shown at *A* involves the use of a special stud bolt turned with a collar at its middle, which collar enters a counterbore in the boss for the stud. The stud is bolted to the case by

means of this collar and a castellated nut. Rules for the size of the stud were given in the chapter on The Cylinder. The lugs of the aluminum casting should have a thickness at least two and one-half times the diameter of the stud. Arrangement *B*, Fig. 194, employs a special double diameter bolt. This has a thread in the aluminum to hold it in place when the cylinder casting is put on the crank case, but the thread is not depended upon to take the strain of the explosion. The lugs for the outermost bolts generally come near the end walls of the case and a reinforcement or rib can be provided between them. Similarly, the lugs for the bolts at the middle of a four unit cylinder block will come at the same place as the central parti

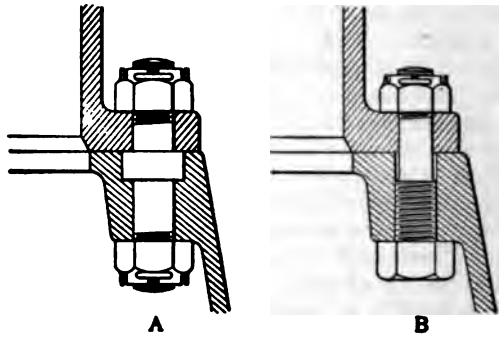

FIG. 194.—CYLINDER BOLTS.

tion wall. If there is no partition wall, as in the cases of four cylinder motors with two bearing crankshafts, arch-shaped stiffening ribs can be run across the under side of the top wall of the crank case, as shown in Fig. 195. Such stiffening ribs are sometimes also provided in other types of motors between cylinder openings where there is no partition wall. These stiffening ribs compensate for the weakening effect of the bulge in the case necessitated by the camshaft tunnel.

In divided crank cases there is usually one partition wall for each intermediate crankshaft bearing. This partition wall is in that part which carries the bearings and in both halves if the bearings are "pinched" between them. Ordinarily these partition walls are provided with vertical ribs on both sides and with a flange at the bottom (see Fig. 192). Occasionally, however, in order to secure still greater rigidity, they are made of box girder form. That is, there are two partition walls a short

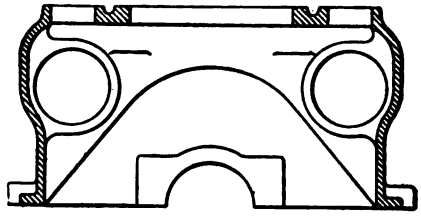

FIG. 195.

distance apart, which are stiffened by a vertical connecting web at their centre. As shown in Fig. 196, this form of girder makes a very substantial bearing support.

Thickness of Sections—The thickness of the metal (aluminum) around the cylinder openings should be .1/8 inch per inch of cylinder bore. The side walls of the case are generally made 1/4 of an inch thick, which is about the smallest thickness that can be successfully cast where the pattern has such a large surface. Around the joint between the upper and lower halves a flange is run which substantially doubles the thickness of the metal there. This flange is made of the same height as its width. If all the bearings are supported by the upper half the two halves can be joined by means of 1/4 inch bolts for engines up to 4 1/2 inches bore, and 3/8 inch bolts for engines of larger bore, spaced 4 to 5 inches. These bolts should pass through lugs twice as high

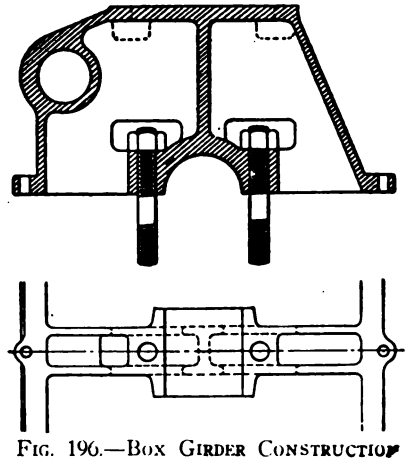

FIG. 196.—BOX GIRDER CONSTRUCTION

as the bolt diameter and of sufficient size to accommodate the bolt head and nut. Gaskets of tough brown paper stuck on with shellac are used between the cylinders and the crank case and between the separate parts of the crank case in order to make these joints oil-tight.

Supporting Arms—Vertical motors, as a rule, are cast with four supporting arms, two on each side, at the front and rear, respectively. Occasionally, however, they are provided with what is known as the three point support, in which case they have only two supporting arms and are in addition supported on a cross member of the frame at either the front or rear crankshaft bearing. Integrally cast supporting arms should preferably be

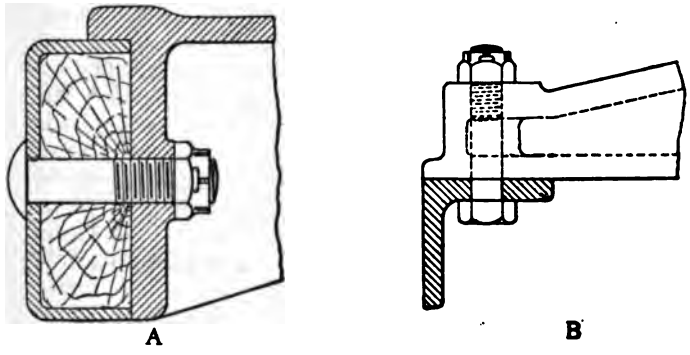

FIG. 197.—METHODS OF FASTENING ENGINE ARMS TO FRAME BARS.

so located that one of their sides is a direct continuation of an end wall of the casing, whereby greater strength is insured. The arms are generally of channel section with the open side below; where they join the crank case, if the latter be of the divided type, they are generally of the full depth of that part of the case with which they are cast, and thence they taper down to the height of the frame section or less, if they are secured to the main frame. Motors are now generally supported directly upon the main frame, and the conventional method of securing their arms to the frame side bars is shown at *A* in Fig. 197. The channel section of the frame where the supporting arms come is filled with wood, the ledge on the supporting arm is placed on top of the frame and a bolt is passed through the frame section, the wood filling and the outer wall of the supporting arm. When the motor is carried on a subframe (made

narrow s hey take the direct thrust of the explosion, while if they design of u pper half they are subject to the force of inertia of the rating the o parts only, but since at racing speeds this is sub- breather tube pr me as the force of the explosion, the caps and wall. Near the top ds and bolts must be the same in either case. which tends to keep bac the integral parts of the bearing hubs by tube is through numerous r studs, four being used if the bearings At *C* is shown an arrangement ors of larger size or of the better This consists simply of a leathe a motor with all bearings sup- tube which permits any excess of pr case, which has to carry the equalize itself. This is based on the i ovided with four bolts or sure in the crank case is due to leakage of and rings, for which an outlet must be provided if the gas are not to blow the oil through the bearings.

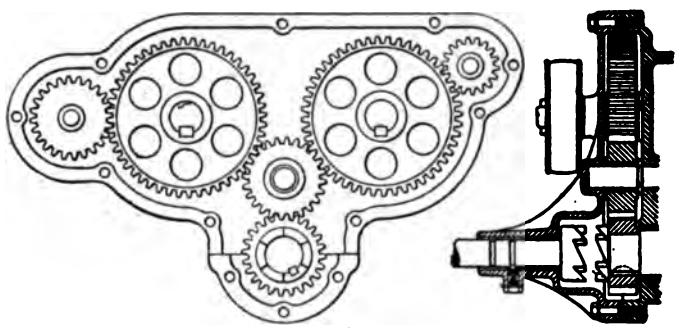

FIG. 200.—CAM GEAR HOUSING.

Cam Gear Housing—The camshaft and accessories driving gears are in nearly all motors located at the forward end, but occasionally they are placed at the rear end. These gears must be completely enclosed in order that they may be effectively lubricated and protected against dust. In a barrel type of crankcase the housing can be made in two parts, one formed integral with the crank case or its end plate, and the other one bolted to it. In crank cases of the divided type one part of the gear housing is cast with the lower half of the case and another with the upper. That part with the lower half can be in the form of a semicylindrical chamber of the proper size to accommodate the crankshaft pinion, the pinion being introduced with the crankshaft from above, or it may be left open in front. The parts of the housing are flanged at their edges and bolted together so as to form an oiltight joint. Some designers make practically the whole housing integral with the crank case and make the detachable part in

as the bolt diameter and of sufficient size to accommod[illegible]sed steel, bolt head and nut. Gaskets of tough brown paper stuck [illegible]ntral plane. shellac are used between the cylinders and the crank ca[illegible]ate from the tween the separate parts of the crank case in o[illegible] crankshaft and these joints oil-tight. [illegible]rankshaft and cam-

Supporting Arms—Vertical motors, as [illegible]sing are held together four supporting arms, two on each sid[illegible]gs must be provided in the respectively. Occasionally, however, t[illegible]n the outside walls, but it is is known as the three point supp[illegible] side walls, since this makes the only two supporting arms and [illegible] easier to keep clean. A typical cross member of the frame [illegible]g is shown in Fig. 200.

bearing. Integrally ca[illegible]**upport**—At the present time nearly all [illegible]e provided with self-starters and no starting [illegible] is carried in position at the front of the car as formerly. However, a starting crank is still carried in the tool box for emergencies and a bearing must be provided for it at the forward end of the motor. This is either formed integral with or bolted to the cam gear housing, or it is fastened to the forward cross member of the frame. It is now usual to make the engaging ratchet of the starting crank of the same diameter as the shaft itself, so the crank can be inserted into its bearing from in front. The front of the bearing is ordinarily closed by means of a cap to prevent dirt and water working into it.

However, the "permanent" starting crank has not been entirely discarded, being still used on practically all motor trucks. If the shaft is of the same diameter as the ratchet, it may be provided with a circular groove, into which engages the point of a spring pressed plunger or a spring pressed steel ball carried in a pocket formed on the bearing, to prevent the crank from jarring out. Generally two adjacent grooves are cut into the shaft of the starting crank, so located that the starting crank ratchet is in engagement when the plunger or ball is in one groove and just out of engagement when it is in the other groove (see Fig. 200). The spring referred to enables the crank to find its proper place when it is thrown off by the starting motor. A somewhat different arrangement is also widely used, in which the starting crank is pressed forward against a thrust bearing by means of a coiled spring surrounding it. When it is desired to engage the starting crank the operator must force it back against the pressure of this spring, which is comparatively light, however.

Bearing Caps—As already stated, in divided crank cases the bearings are generally formed between one-half of the case and caps bolted to same. If the caps form the lower half of the

bearing they take the direct thrust of the explosion, while if they form the upper half they are subject to the force of inertia of the reciprocating parts only, but since at racing speeds this is substantially the same as the force of the explosion, the caps and their retaining studs and bolts must be the same in either case. The caps are held to the integral parts of the bearing hubs by either two or four bolts or studs, four being used if the bearings are relatively long, on motors of larger size or of the better grade. The rear bearing cap in a motor with all bearings supported from the top half of the case, which has to carry the weight of the flywheel, should be provided with four bolts or

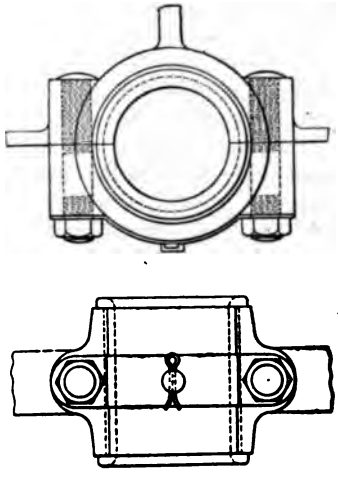

FIG. 201.—CRANK BEARING CAP AND LOCKING MEANS.

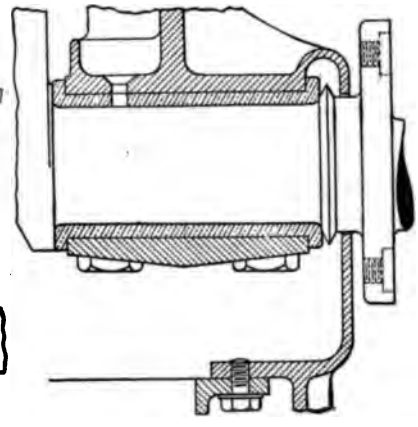

FIG. 202.—OIL GUARD.

studs. The studs of the caps should be made of such size that their combined cross-sectional area is equal to one-twelfth the projected surface of the bearing. As in the case of the cylinder studs, it is not well to depend upon threads in the aluminum, and the studs should therefore be backed up by nuts. A method for securing the nuts of the cap studs in place is illustrated in Fig. 201. A stamping is made of sheet brass, curved at the middle to the shape of the cap, with two hexagonal holes near its ends fitting snugly over the nuts, and a small round hole at its centre through which passes a pin cast integral with the cap, and which takes a split pin that holds the stamping in place.

Some designers provide the bearing caps with ribs to help carry off the heat generated by friction in the bearing.

The integral part of the bearing and its cap are separated by shims when first assembled, so that when the bearing wears it can be readjusted by removing one or more of the shims from each side of each bearing. When the bearing hub is made in halves the bushing is also made that way and with flanges on both ends preventing endwise dislocation. Angular dislocation is prevented by one or two pins through the cap and bushing, or if the bushing is of the die cast type a pin may be cast integral with it, which enters a hole into the cap from the inside.

The bearing metal generally used is some white brass or babbitt composition, the bushing being either cast of this composition or cast of bronze and lined with the composition. The bearing bushings are drilled with oil holes and oil grooves in the usual way.

The camshaft bushings are cast of bearing bronze, and if the camshaft does not extend beyond the rear bearing the latter is generally closed at its outer end, so that no oil will be lost through it. It may either be cast "blind" at one end or a piece of sheet brass may be soldered over the end.

Oil Guards—To prevent the loss of oil through the front and rear crankshaft bearings, the crankshaft is provided with oil guards at these places, as already explained. These consist of collars integral with the shaft turned to a sharp edge from which the oil is flung off when the crankshaft turns at considerable speed. An annular recess must be formed in the end of the bearing hub, as shown in Fig. 202, to catch the oil thus flung off and return it to the bottom of the crank chamber. If the end bearing is supported by the upper half of the crank chamber the lower half is formed with a sort of pocket equal in outside dimensions to the bearing hub, into which the oil thrown off by the oil guard drops. If, on the other hand, half of the bearing is in the lower half of the crank case a connecting passage must be drilled from the oil guard recess to the crank chamber through a rib at the bottom of the bearing hubs. Some manufacturers use felt washers or stuffing boxes at the outer ends of bearings to prevent the egress of oil and the ingress of dirt and grit. Another method of preventing oil from working out of the crankcase consists in turning a circular oil groove in the bearing bushing near its outer end, in which any oil working toward the end collects and whence it returns to the case.

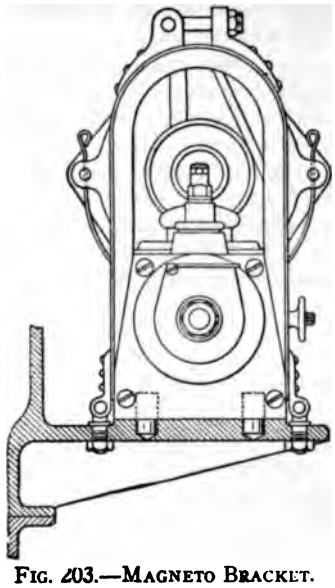

FIG. 203.—MAGNETO BRACKET.

Magneto and Pump Brackets—The magneto is generally set on a bracket cast integral with the upper half of the case, suitably strengthened by ribs. In designing this bracket it is well to remember that most foreign magnetos measure 45 millimeters from the base to the armature shaft centre and are provided with four ⅜-inch dowel holes in the base located at the corners of a square with 50 millimeters sides; in the largest models, now rarely used, the height of the shaft is 50 millimeters and the dowels are at the corners of a rectangle measuring 50 by 80 millimeters. The magneto is generally secured in place by means of two flexible steel bands anchored to the bracket and provided with a bolted joint between them, which makes the magneto very easy to remove. This is illustrated in Fig. 203. The magnetos are, however, also provided with four threaded holes in the base and can therefore also be secured to the bracket by means of cap screws.

Most of the water circulating pumps are manufactured by the car manufacturers themselves, and their bases or supporting members are of many different shapes. Sometimes the same kind of bracket is provided for the pump as for the magneto, while again the pump, if of the centrifugal type, may be provided with an extension of its radial flange by which it is bolted to a supporting bracket. Power tire pumps also are now often fitted to engines.

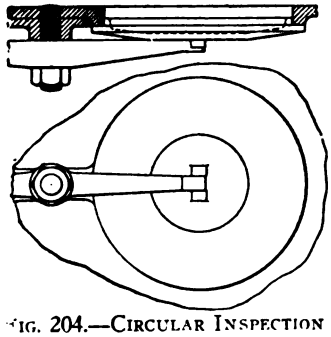

FIG. 204.—CIRCULAR INSPECTION HOLE COVER.

Inspection Hole Covers—Some crank cases have inspection holes and it is a good plan to provide their covers with some form of quick acting locking mechanism rather than to secure them in place by machine screws. One form of such locking mechanisms consists merely of a yoke swiveling on a stud secured into the crank case, whose ends engage between projections cast near the centres of adjacent cover plates. (Fig. 204). Another arrangement is shown in Fig. 205. This cover is of rectangular shape and is held in place by means of sliding bolts with tapered ends engaging into openings formed by bent pieces of steel strip riveted to the wall of the case on the inside.

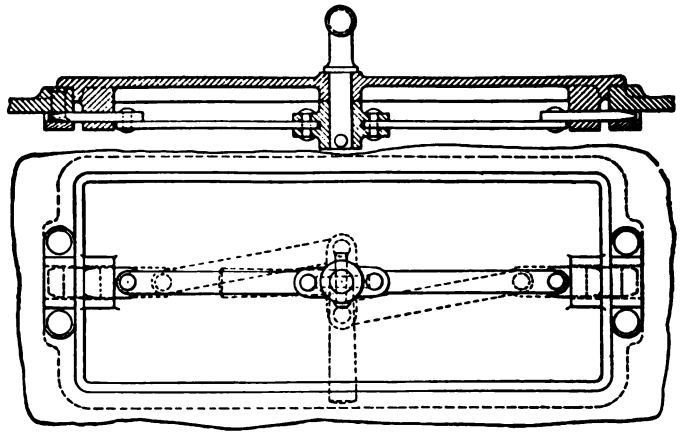

FIG. 205.—RECTANGULAR INSPECTION HOLE COVER.

On the whole very few automobile motors are now provided with inspection holes, there being generally little room on either side of the motor in a car.

Continuous Web Construction—Some manufacturers, particularly those turning out high-priced cars, cast continuous webs on the crank case, extending between the frame and the crank case and the whole length of the latter, or between the front and rear supporting arms. The advantage of these webs is that they prevent road dust from working up to the cylinders, valve springs and other motor parts, tending to keep the parts cleaner. Fig. 206 shows this construction.

Splash Lubrication—So many different systems of engine lubrication have been worked out that it is difficult to classify them. We may distinguish, however, between the following: Plain splash; splash from constant level troughs with pump circulation; part force feed and part splash; force feed without splash; gravity feed without splash.

The simple splash system was much used on earlier models of cars. The crank case contained a supply of oil into which the connecting rod head dipped at each revolution of the crank, thereby splashing the oil over all the interior parts. As the oil worked out through the bearings or past the pistons the oil level in the crank chamber fell and the plash became weaker. When the operator considered that the oil level had become too low he would replenish the supply by either pouring oil into the crank chamber through a filling hole or transferring it from a supply

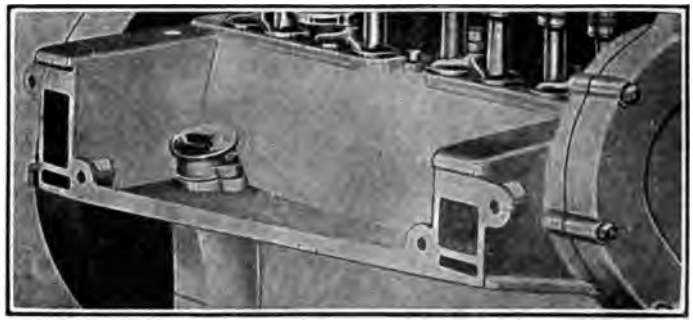

FIG. 206.—CONTINUOUS WEB CONSTRUCTION.

tank to the crank chamber by means of a hand pump provided for the purpose.

The disadvantages of this system are apparent. The oil level varied constantly and so, naturally, did the rate of supply of lubricant to the bearing surfaces. When the crank chamber was replenished with oil the supply to the cylinder walls was generally excessive and the motor in consequence would pour dense smoke out through the muffler. Some makers found it necessary, in order to reduce this smoking, to provide a baffle plate between the cylinder and crank chamber with an opening in the form of a rectangular slot for the connecting rod to pass through. Moreover, the lubrication required frequent attention from the operator, and if the latter was careless the motor could easily be seriously injured through lack of oil.

Mechanical Oilers—Through these deficiencies splash lubrication came into disrepute, and lubrication by means of multiple feed mechanical oilers came into vogue. These oilers consisted of prismatic oil reservoirs containing a set of plunger pumps forcing the oil through individual oil leads to all the different parts requiring lubrication. There was at least one pump for each lead, and oil was forced mechanically to each bearing, in proportion to the speed of the engine. While this system was quite effective, its complication was objectionable. The oiler usually had a belt drive, which involved an element of uncertainty, and the maze of oil tubes (sometimes as many as twelve) running from the dashboard along the side of the engine, rendered access to the latter difficult and gave it a frail and non-mechanical appearance. Moreover, there was an adjustment for each feed and the chances of mal-adjustment, and, consequently, of improper lubrication of some bearing, naturally increased with the number of feeds. It was felt that a simpler system was needed and one that was at the same time thoroughly automatic. It was then that the pump circulating system was introduced.

Gravity and Force Feed—It will be seen from the above that there are two methods of feeding oil to the bearing surfaces, either by gravity or by means of mechanical pressure. The latter may be as high as 30 pounds per square inch, or even higher. When oil is forced to the bearings under considerable pressure there is evidently less danger of it being squeezed out by the pressure on the bearing. It is generally agreed that with pressure oil feed the specific pressure on the bearing can be made greater and the bearing will last longer than with gravity feed. On the other hand, the pressure feed system is more expensive to install and also somewhat less economical of oil. This system is best adapted for motors which are required to work at or near their full load capacity for long periods at a time.

The oil may also be fed to the bearing surfaces by gaseous pressure derived either from the engine exhaust or an air pump. This system enjoyed some popularity about the same time that mechanical lubricators were in vogue, but is not much used now.

Force Feed Non-Splash System—In this system oil is drawn from a reservoir, generally located at the bottom of the crank case by means of a pump and is forced to the main bearings of the crankshaft. A branch from the oil delivery pipe leads to the dash, where it connects to an oil gauge indicating the pressure acting upon the oil. After leaving the pump the oil may

either pass through a distributor which connects the pump successively with each of the main bearings, or it may divide between leads to the individual bearings which are connected in parallel with low pressure system. The latter arrangement is probably not quite as dependable as that in which a distributor is used, for the reason that if one of the leads should become clogged up all the oil would pass through the remaining leads and the obstruction might not be dislodged. A pressure regulator in the form of a by-pass valve is connected to the delivery side of the pump.

In bearings carrying a uniform or nearly uniform load it is the rule to feed the oil to the side opposite to where the pressure comes. In the crankshaft, crank pin and piston pin bearings of a gasoline motor the pressure constantly changes from one side to the other, and it does not seem to matter whether oil is fed to the under or the upper side, both methods being successfuly employed.

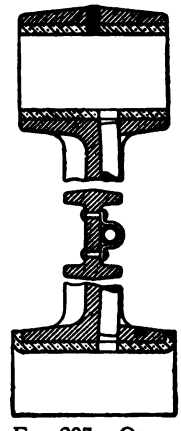

FIG. 207.—OIL TUBE TO PISTON PIN.

The oil passes to the main bearings through oil tubes and passages drilled in the crank chamber wall. The bearing bushing is also provided with a drill hole from which radiate the oil grooves. A radial hole in the crankshaft registers with the hole in the bushing nce every revolution of the crankshaft and lows oil to enter the drilled passage in the nkshaft. A groove may be cut in the bearpart way around the circumference to keep il passage in the crankshaft open for a r time. In drilling the crankshaft, some acturers provide oil pasages only from f the main bearings to the adjacent n bearings, while others drill the crankshaft from end to that in case the oil lead to one of the main bearings ecome obstructed oil would be fed to that bearing djacent crank pin bearings through the other leads. carried outward to the crank pin bearings by centrifin addition to the pump pressure acting upon it. in bearing, which is one of the most difficult bearate satisfactorily, is supplied with oil from the ng through a hole drilled through the centre of the or through a tube passing up alongside the conrough a hollow connecting rod. (See Fig. 207.) oil is fed at a comparatively fast rate and a good

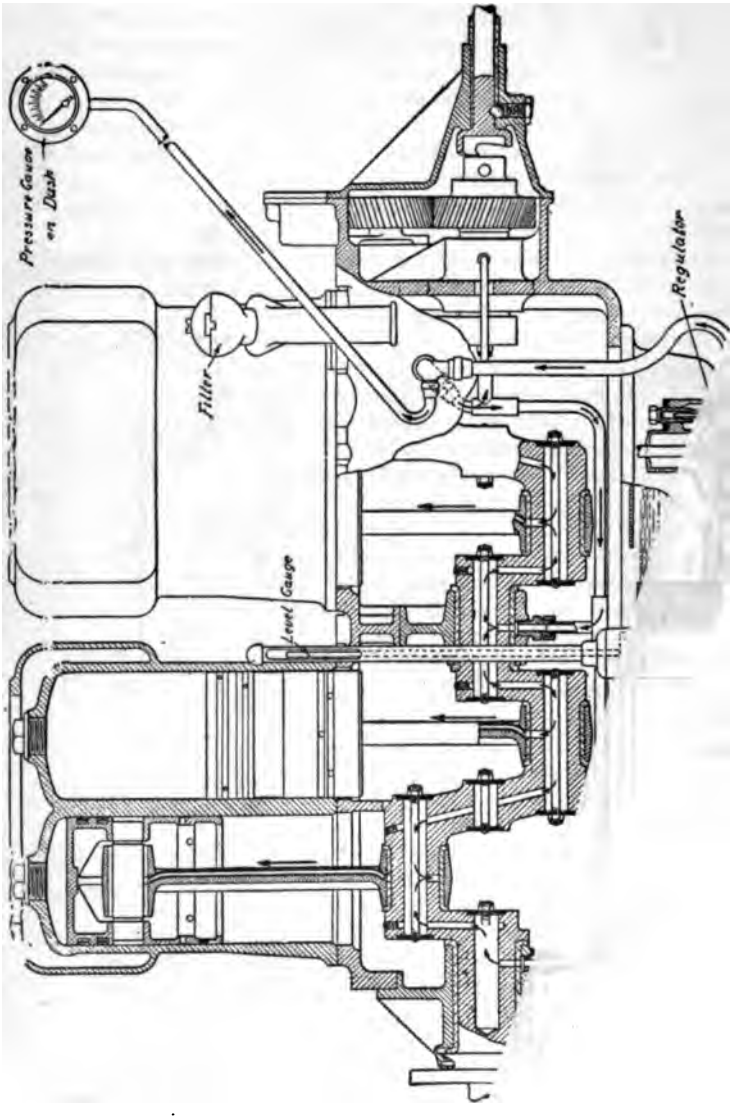
Pressure Gauge on Dash
Filler
Level Gauge
Regulator

deal of oil works through the bearings and is thrown off the crank arms, etc., onto the interior cylinder, piston and crank chamber walls. This oil is depended upon to lubricate the cylinder, the camshaft bearings, the interior members of the valve gear, etc. All of the oil thus thrown off, except that which reaches the flame swept surfaces of the cylinder wall and is burned, returns to the bottom of the crank case and collects in the oil reservoir, from which it is drawn by the pump. At the pump inlet there is a strainer which separates all metal dust or particles of dirt from the oil before it is recirculated. The Marmon oiling system, illustrated in Fig. 208, is of this type.

The above described system is the extreme mechanical system in which the largest number of parts receive their lubricant directly by mechanical pressure. From it can be evolved a number of other systems by increasing the number of bearings oiled by the oil spray and correspondingly reducing those oiled by force feed. Thus, for instance, the piston pin bearings may be oiled by means of the spray by providing the small end of the connecting rod with oil pockets on top, as described in connection with the connecting rod. Then, instead of feeding the oil from the crankshaft main bearings to the crank pin bearings through oil ducts all the way, the oil working through the main bearings at their inner ends may be caught in oil rings, as shown in Fig. 209, and from these conducted through diagonal holes to the crank pin bearing surfaces. Such a diagonal hole, by the way, is not as objectionable as a radial hole, since a radial hole considerably reduces the amount of stock at a certain section—and that usually at the point of maximum stress—thus tending to concentrate the strain and considerably weakening the shaft. In the case of crankshafts for engines of short stroke as compared with the bore it is possible to drill inclined holes through the crankshaft main bearing crank arm and crank pin, thus largely reducing this weakening effect and at the same time doing away with plugged holes, which are apt to develop leaks.

Pressure Regulator.—With all force feed systems there is provided a pressure regulator which automatically keeps the pressure of feed constant, and can be set for different pressures. It consists of a spring-loaded valve in a bypass passage from the delivery side of the pump to the suction side. When the oil pressure exceeds that for which the valve is set the latter opens and allows some of the oil to return to the pump inlet or to the sump, thereby relieving the pressure in the system. Under certain conditions when the engine

is new or has had its bearings refitted it is desirable to run with a higher pressure on the oil, and this can be had by adjusting the regulator. In the cut of the Marmon system the regulator is shown fitted to the pump. Hand bypass valves are sometimes used in connection with circulating splash systems, to be closed while the bearings are a tight fit, and to be opened when they are worn in. If no such regulators were provided the engines would over-oil under certain conditions and consequently smoke.

Gravity Feed Non-Splash System—In the gravity feed non-splash system an oil reservoir is carried somewhere under the engine hood, generally near the cylinders, so that the oil will be kept in its normal state of fluidity in extremely cold weather by the heat radiated by the cylinders. The reservoir or tank may be placed slightly above the cylinder heads and oil fed from it by

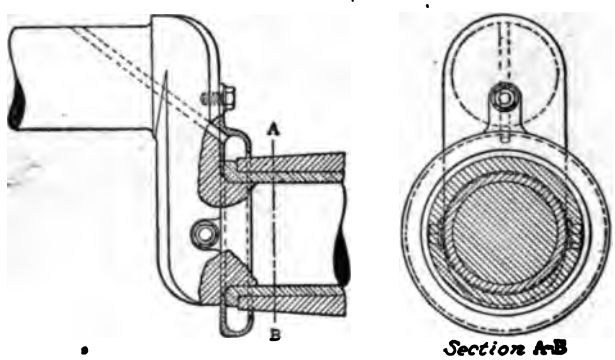

FIG. 209.—CRANKSHAFT OIL RING.

gravity to each of the crankshaft bearings through oil tubes and holes drilled in the crank case wall. From the main bearings the oil flows through the hollow crankshaft to the crankpin bearings, and possibly through tubes to the piston pin bearings, the rest of the bearings being lubricated by the spray. This system is now obsolete.

Circulating Splash System—At the present time the most popular method of engine lubrication is by the circulating splash system. The oil is carried in a sump or an oil well at the bottom of the crank case from which it is drawn by the pump and forced through a circulation indicator on the dash to the crankshaft main bearings, and sometimes also to the cam gear compartment. The oil working through the main bearings drains

to the bottom of the crank case, which is formed with troughs into which splashers on the connecting rod heads dip at each revolution of the crankshaft. The oil level in the troughs is kept constant by means of overflow standpipes or holes in the side wall of the case through which the excess oil drains off to the sump or oil well below. In the system shown in Fig. 210 the oil is forced by the pump into an oil passage formed in the top wall of the crank chamber and running the entire length thereof. From this main oil passage the oil is conducted through short tubes to the crankshaft main bearings, the cam gear housing and the central camshaft bearing. The tube leading to the

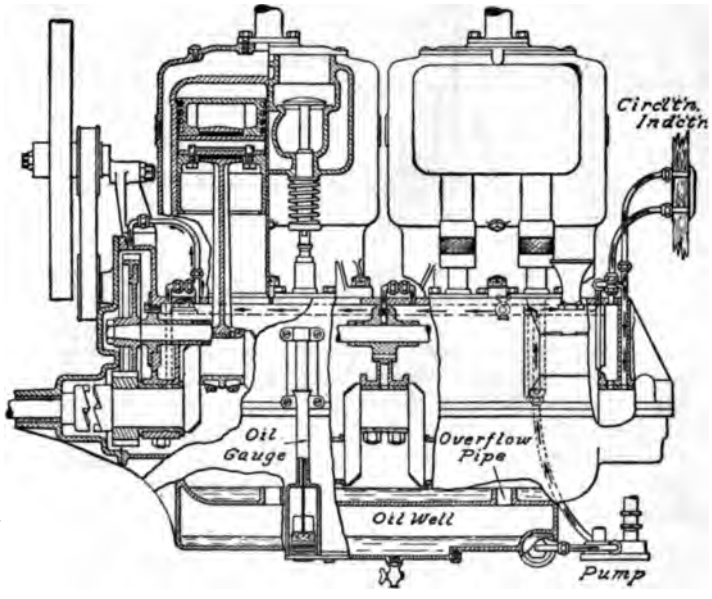

FIG. 210.—CONSTANT LEVEL SPLASH CIRCULATING SYSTEM.

rear main bearing leads through the indicator on the dash. It will be observed that all of the bearings are provided with splash pockets, so that lubrication would not cease even if the pump should fail to work. Instead of to the main bearings, the oil may be fed directly to the oil troughs or to both the bearings and the troughs.

One of the difficulties with the splash systems in the past has been to prevent excessive lubrication of the cylinder walls and

consequent smoking of the motor. That is, if the oil level is carried sufficiently high to insure that all of the bearings receive an adequate supply of oil the cylinder walls will receive an excessive amount, with the result that the motor will smoke. This it has been attempted to remedy in the past by means of baffle plates between the cylinders and crank case and by means of scraper rings at the bottom end of the piston which are designed to scrape off a portion of the oil thrown onto the cylinder walls. The trouble has been greatly reduced since it has become cus-

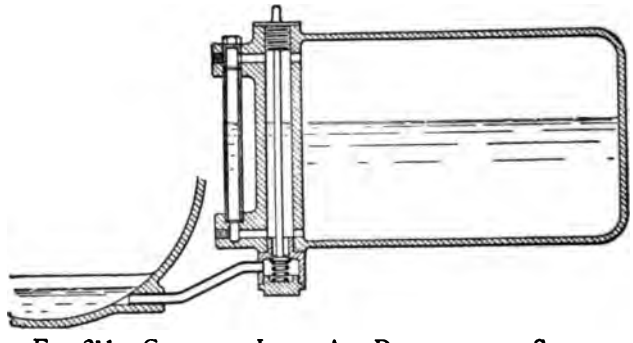

FIG. 211.—CONSTANT LEVEL AIR DISPLACEMENT SYSTEM.

tomary to grind both cylinders and pistons, which gives a better fit and does not allow the oil to get by the piston so easily. Some manufacturers cut one or two oil grooves in the wall of the piston, with the upper side perpendicular to the cylinder axis. The upper edge of the groove scrapes the oil from the cylinder wall, and the oil collecting in the groove returns through holes drilled through the piston wall to the crank chamber.

Pump Feed and Splash System—Some manufacturers, instead of carrying the supply of oil in an oil well, carry it in a tank placed near the cylinders from which oil is pumped into the separate compartments of the crank chamber at the rate it is consumed by the motor. The rate of feed of the pump or pumps is adjustable. This, therefore, is a splash non-circulating system.

Air Displacement Constant Level System—In another system oil is carried in a reservoir at the side of the crank case and cast integral therewith. From the bottom of this reservoir lead two downwardly inclined pipes into the crank chamber compartments, with their mouths at the height at which it is

desired to carry the oil level in these compartments. The oil reservoir is air tight, and when the mouths of the two pipes are covered with oil (that is, when the oil in the crank chamber stands at the proper level) the reservoir is "air bound" and no oil can flow into the crank case. When, however, the oil level sinks below the mouths of the tubes, air bubbles will rise through the tubes to the top of the reservoir and an equivalent amount of oil will flow into the crank chamber, until the mouths of the tubes are again covered with oil. The amount of oil in the reservoir is indicated by a gauge glass at one corner of it. Alongside of this gauge glass there is a standpipe from the bottom of which the oil flows to the crank chamber. The opening at the bottom of the standpipe is controlled by a spring pressed poppet valve which is normally held open by the filler cap at the top of the standpipe and closes automatically when the cap is removed, so no oil will run out. This system is illustrated in Fig. 211.

Automatic Circulation in Crank Chamber—Instead of providing a separate feed to each compartment of the crank chamber, some manufacturers endeavor to keep the splash level in the different compartments substantially constant by means of a system of internal circulation. Oil from the sump is pumped through a sight feed on the dash into one of the crank case compartments, say the front one. It is splashed around by the crank in this compartment, and the spray draining back down the walls of the compartment is caught in inclined troughs or gutters on the walls and conducted into the compartment directly in the rear. There it is splashed over the walls again, and again collected in an inclined trough and conveyed to the compartment in the rear. From the rearmost compartment of the crank case it is conducted into the sump, whence it is recirculated by a pump through an indicator. In a system employed by the Hupp Motor Car Company for a number of years, the oil circulated in the crank case in the manner described above, but a pump was dispensed with, the oil finally collecting in the flywheel housing where it was picked up by the revolving flywheel from which it was thrown off by centrifugal force and some of it caught in the mouth of a passage leading to the front compartment. The method of internal circulation by means of oil gutters is illustrated in Fig. 212.

Manufacturers of two cycle motors drawing their fuel charge through the crank chamber sometimes lubricate them by mixing oil with the fuel in the proportion of 1:20.

Gear Oil Pumps—A rather extensively used type of oil circulating pump is the gear pump. This consists of a casing in which fit snugly two spur gears, one driven by means of its shaft

and the other by meshing with the former. The oil enters the housing on the side on which the meshing teeth separate and fills the spaces between adjacent teeth and the wall of the housing. It is thus carried around with the teeth to the opposite side of the housing and leaves through an opening there. As there is exceedingly little pressure on the teeth of the gears, and as they run constantly in an oil bath the wear is almost nil. The gear pump is used particularly in connection with force feed systems, in which oil is fed to the bearing surfaces under a pressure of, say, 15 lb. per square inch. It is capable of giving a high pressure even at moderate speed, but the pressure under which the oil is fed to the bearing is determined by an adjustable relief valve or by-pass valve.

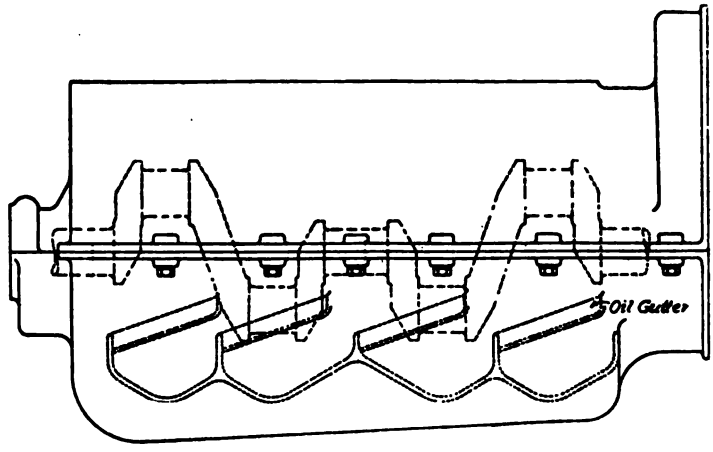

FIG. 212.—INTERNAL CIRCULATION BY MEANS OF OIL GUTTERS.

A good rule in regard to rate of circulation in circulating splash systems is to provide for the delivery per minute of 25 cubic inches of oil per square inch of projected bearing surface supplied directly, at the maximum speed of the motor. If the motor is provided with ball bearings and has splash lubrication the oil may be circulated at the rate of 15 cubic inches per minute per horse power at normal engine speed. Suppose a 3½ x 5 inch motor having a 1¾ inch crankshaft with three main bearings of an aggregate length of 9¼ inches. The total projected bearing surface then is

$$9\tfrac{1}{4} \times 1\tfrac{3}{4} = 16 \text{ square inches,}$$

and the pump should move

$$16 \times 25 = 400 \text{ cubic inches per minute}$$

at a speed of, say, 1,800 r. p. m.

The delivery of oil by a gear pump may be calculated as follows: Let d be the pitch diameter of one of the gears, p the diametral pitch, h the height of the teeth $\left(= \frac{2}{p}\right)$, f the face width of the gears, and n the number of revolutions per minute (which is generally equal to one-half the revolutions of the crankshaft). It may be assumed that the spaces between the teeth are equal in volume to the teeth. The total volume of the annulus comprising the teeth and the spaces is

$$\left[(d + h)^2 - (d - h)^2\right] \frac{\pi}{4} f = \pi\, d\, h\, f.$$

The amount of oil transferred from one side of the housing to the other by one gear in one revolution is evidently half this, and the two gears together transfer a quantity of oil which is represented by the above expression. This is the theoretical delivery. The actual delivery is somewhat less, owing to leakage over the ends of the gears and between the meshing teeth, but in calculating the required size of pump the theoretical delivery can be used as a basis.

Substituting $\frac{2}{p}$ for h and inserting n, the number of revolutions of the pump gears per minute, we have for the quantity of oil delivered:

$$Q = \frac{2\pi d f n}{p} \textit{ cubic inches per minute} \qquad (93)$$

It will be noticed that the delivery is inversely proportional to the pitch number, hence a relatively small pitch number should be chosen.

If for the pump for our 3½ x 5 inch motor we choose a pitch of 8 and a pitch diameter of 1¼ inches (10 teeth gears), then at 900 revolutions per minute the oil delivery will be

$$\frac{2 \times 3.14 \times 1\tfrac{1}{4} \times 900\, f}{8} = 884\, f.$$

and since 400 cubic inches is required we have

$$884 f = 400$$

$$f = \frac{400}{884} = 0.45 +, \textit{ say } \tfrac{1}{2} \textit{ inch.}$$

Feeding a liberal amount of oil to the bearings is desirable, because the oil, in addition to acting as a lubricant, serves to carry

off the heat generated by friction in the bearing, and thus tends to prevent overheating.

A design of gear pump for circulating the oil is shown in Fig. 213. The pump consists of the housing, the cover and the two gears. The shaft through which the pump receives its motion extends through its bearing, and leakage of oil is prevented by means of a stuffing box. The idling gear revolves on a stud secured into a blind hub formed on the housing. The inlet and outlet openings are on opposite sides. Gear pumps have comparatively little suction power, and for this reason are generally

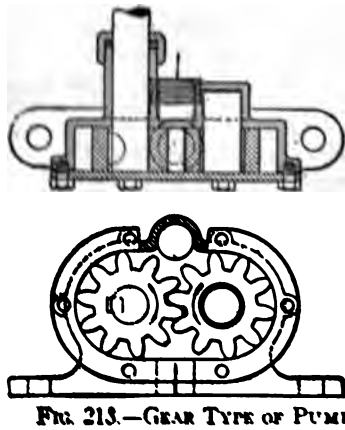

FIG. 213.—GEAR TYPE OF PUMP.

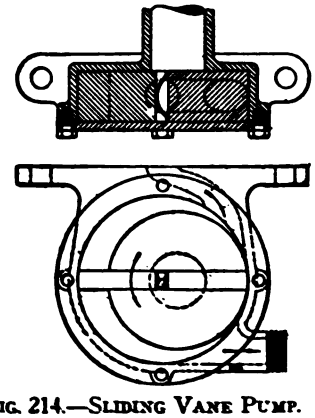

FIG. 214.—SLIDING VANE PUMP.

placed at the side of the oil well so that the oil flows into them by gravity.

German designers often provide double gear pumps, there being one set of gears on each side of the bearings. One set of gears is of about half the width of face as the other, the smaller pump delivering oil to the circulation indicator and the larger one to the distributor. The arrangement has the advantage that the bearings are nearly symmetrically loaded, but its complication is against it, and the indications of the circulation indicator are hardly as reliable as when the oil delivered by the pump which supplies the bearings flows through the indicator.

Sliding Vane Pump—This type of pump (Fig. 214), which is used to a small extent for circulating the lubricating oil, consists of a cylindrical chamber in which is located a disc of a thickness equal to the internal height of the chamber but of smaller diameter. The disc is located eccentrically with respect to the chamber and is cut with a diametral slot dividing it into

halves, in which slot are located two sliding vanes which are pressed apart by a flat spring between them. It is apparent that the volume of liquid moved by such a pump per revolution is substantially equal to the difference between the volume of the pump chamber and that of the disc within it. The housings of gear and sliding vane oil pumps are made of brass, and the rotating parts of steel, but the gears may be of cast iron.

Plunger Pump—Of late plunger pumps have come into extensive use for circulating the oil, some being placed inside the crank chamber and operated directly from the camshaft. They may be (and occasionally are) actuated by one of the valve cams, but it is better to employ an eccentric on the camshaft for the purpose, which gives a smoother action. Referring to Fig. 215, *A* is the pump barrel, made of brass tubing, which is inserted into the crank chamber from below and is held by means of rings cast on the crank chamber wall. Within the barrel *A* is the plunger *B*, which is drilled out at its lower end to receive the coiled spring *C*. At the bottom of the pump barrel is located a ball valve *D*. The spring rests upon the valve housing and forces the plunger against the eccentric *E* on the camshaft. As the plunger moves upward the space in which the spring is located increases in volume and oil enters it through the ball valve. When the plunger is next moved down by the eccentric the ball valve closes and oil is forced through the drill hole *F* in the plunger, the space formed by the flat on the plunger, and out through the

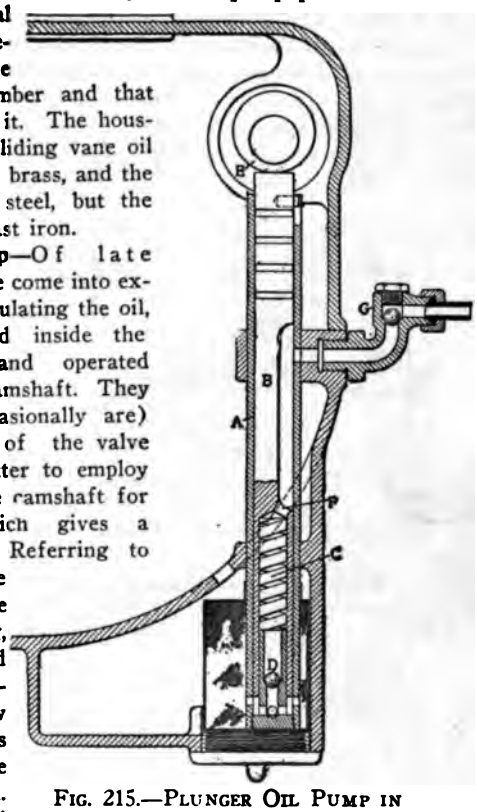

FIG. 215.—PLUNGER OIL PUMP IN CRANK CHAMBER.

check valve *G* at the delivery opening. The delivery per stroke is, of course, equal to the change in volume of the spring chamber.

A simpler, and especially much more accessible plunger pump, is shown in Fig. 216. It is operated by an eccentric on the camshaft, the same as the previously described design, but instead of being located inside the crank chamber it is bolted to the side of same. The plunger *A* is drilled out from one end, and a coiled spring, *B*, is inserted in it, which holds the plunger against the eccentric. As the plun-

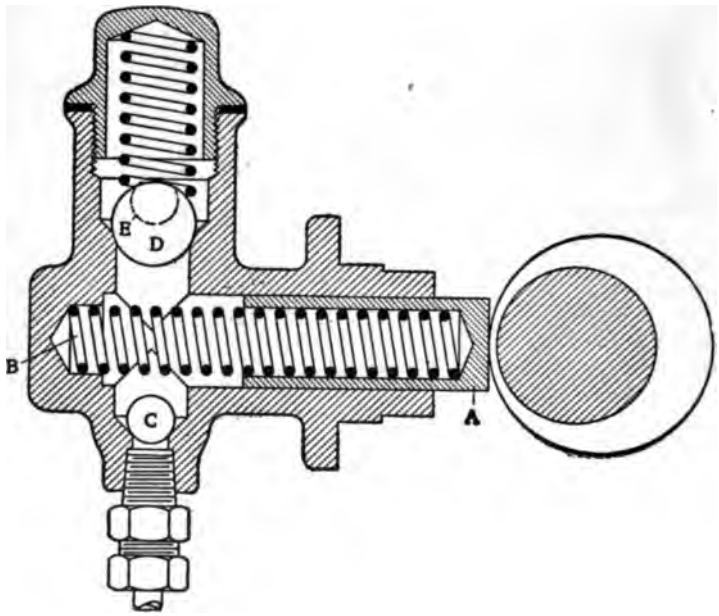

FIG. 216.—PLUNGER OIL PUMP BOLTED TO OUTSIDE OF CRANK CHAMBER.

ger moves toward the camshaft, oil is drawn in through the ball check valve *C*, and during the return stroke of the plunger it is forced through the delivery check valve *D*, and out through the delivery passage *E*. Exigencies of manufacture make it necessary to make the delivery check valve much larger than the suction check valve, and to insure quick closing of the delivery valve it is provided with a spring.

Oil Strainers—The oil drawn in by the pump must be strained, so that any metal dust worn off the bearings may be separated from it, because if this metal dust should get into the bearings it would start cutting. The strainer should be made of brass wire gauze of about 16 meshes to the inch, of such form that it can be easily removed for cleaning. It is also well to remember that as the oil becomes dirty it will clog up some of the meshes, and in order that the flow of oil through the strainer

FIG. 217.—COMBINED STRAINER, OVERFLOW PIPE AND DRAIN.

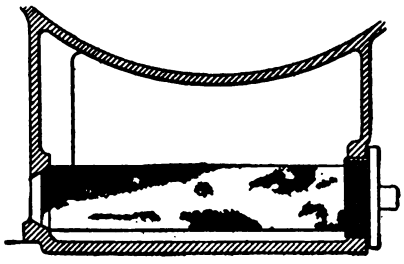

FIG. 218.—WIRE SCREEN CYLINDER OIL STRAINER.

may not be appreciably impeded it should be made of large area. One design of combined drain, strainer and overflow pipe is shown in Fig. 217. This is in the form of a hollow cylindrical casing screwing into the bottom wall of the crank chamber, which is covered with a layer of wire gauze. The joint in the bottom of the oil well is rendered oiltight by means of a gasket under the flange of the strainer.

Frequently the strainer is made funnel shaped, with the edge of the big end flared outwardly, and is inserted into the oil well through the opening over which the pump is bolted. Still another design of strainer is shown in Fig. 218. In this case a gauze drum extends horizontally through the oil well, one end fitting against a tapered seat at the outlet to the pump and the other end being pressed against by a large plug closing the opening through which the strainer is inserted.

Oil Level Gauge—When the supply of oil is carried in an oil well at the bottom of the crank case some means must be provided to enable the operator to determine quickly how much oil remains in the well. Some manufacturers merely provide two try cocks in the side of the oil reservoir, one of which is

placed at the lowest level which the oil should be allowed to reach. Others place a "bull's-eye" or glass disc in the side of the well. This is not very satisfactory, since the oil quickly accumulates dirt, which settles on the glass and makes it practically impossible to distinguish the oil level.

The most satisfactory form of level gauge is a float in a float chamber communicating with the oil well, as shown in Fig. 219. The float is provided with a stem, which extends up into a glass tube at the side of the upper half of the crank chamber, with a black ball on top, which, in connection with scale marks on the glass, gives an accurate idea of the height of the oil in the well. Instead of bolting the float chamber to the oil well it is sometimes cast integral with the lower half of the crank case, while again the float may be placed in the oil well itself.

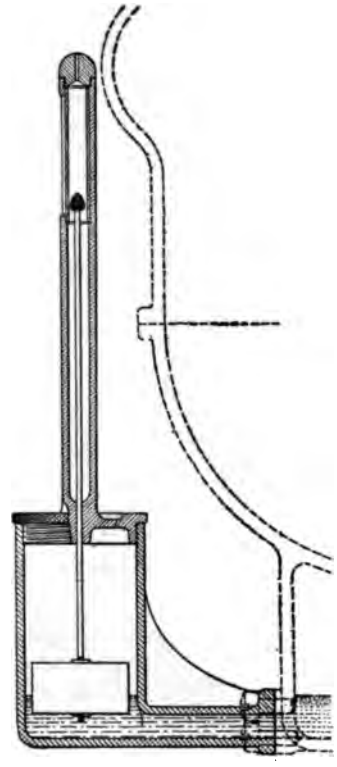

FIG. 219.—OIL LEVEL INDICATOR.

Circulation Indicator—A continuous supply of lubricant to its bearing surfaces is almost as essential to the proper operation of a gasoline motor as breathing is to the sustenance of human life. If the oil feed stops it is usually only a short time until destructive heating and cutting of the bearings begins, and there should, therefore, be some device constantly indicating to the driver that the oil is being fed properly. If oil is supplied to the bearings under pressure a pressure gauge or indicator on the dash will serve the purpose, since the oil feed could only stop if the pump should cease to work or an oil lead should break, in either of which cases the pressure in the system would become nil.

In the case of the ordinary circulating systems the general practice is to carry either all the oil or that fed to one bearing or one crank case compartment, to the dashboard, where it

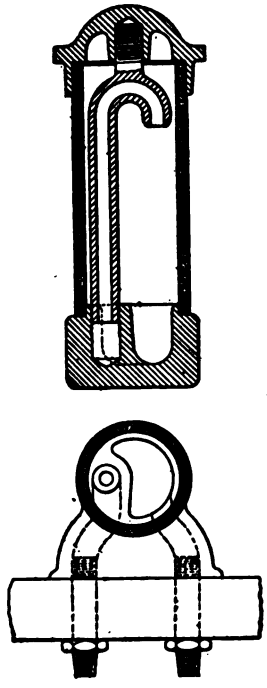

FIG. 220.—CIRCULATION INDICATOR.

passes through a circulation indicator. The most familiar form of circulation indicator is of the fountain type, as illustrated in Fig. 220. It consists of a brass base bolted to the dash, in which there are two oil channels with threaded connections in front of the dash. The oil channels open on the top side of the base, and one, the inlet channel, is provided with a short standpipe, the top end of which is curved in a half circle, so that it discharges downwardly. On the base rests a glass cylinder with a brass cap which is screwed to a threaded projection of the standpipe at the centre of the glass cylinder. When the oil is circulating it gushes from the standpipe.

Oil Distributor—The oil distributor used in some motor lubricating systems, and which is sometimes combined with the pump, consists of a housing in which rotates a disc with an oil channel in one face which places a central opening in the cover through which the oil arrives, in communication successively with delivery openings arranged concentrically. Fig. 221 shows the construction. The oil ports should be so arranged tnat the passage through the distributor is never closed. If some of the bearings supplied by the distributor require more oil than others this can easily be arranged for by making the outlet ports so as to extend over different angles. The oil distributor must be driven from the engine.

Filling Holes and Drain Plugs—Oil is generally poured into the crank chamber through the breather tubes. The ordinary design of breather tube, however, does not admit of pouring the oil in rapidly, and for this reason breather tubes are now sometimes made funnel shaped with a hinged cover, as shown in Fig. 222. The cover is provided with a wire screen through which the motor "breathes."

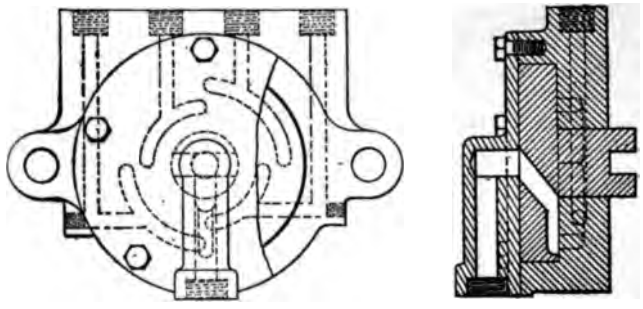

FIG. 221.—OIL DISTRIBUTOR.

Drain plugs or cocks should be placed in the bottom of the oil well so as to permit of draining off all oil after it has become contaminated. Provisions should also be made for draining the splash chambers, and it is a good plan to have the bottom of the oil well and splash chambers slope slightly toward the drain plug. All cocks fitted to the bottom of automobile motors should be so arranged that they are closed when the handle points downward, so they cannot possibly jar open.

Size of Oil Conduits—The oil pipes and conduits in circulating systems are frequently made of inadequate size, which is probably due to the fact that in systems where oil is fed as it is consumed the rate of feed is very slow, and very small tubes are therefore used; so engineers have come to consider very small tubes adequate for conveying oil. In circulating systems the rate of flow through the tubes, based on the theoretical delivery of the pump, should not exceed 200 feet per minute, and conduits formed in the crank case should preferably be larger. All oil holes from pockets to bearings should also be of large size, because there is no pressure on the oil caught in the pockets, and when it is cold it does not flow easily through small holes.

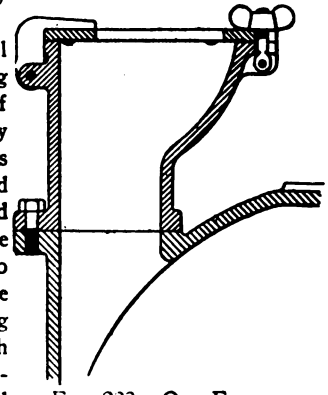

FIG. 222.—OIL FILLER HOLE AND CAP.

Lubrication of V Engines.—With V type engines splash lubrication is impracticable because one set of cylinders would receive much more oil than the other, and either one set would smoke or the other run dry. Cylinders may, of course, be lubricated by the oil working out from the ends of the connecting rod bearings, as this is thrown equally in all directions. This spray may also be depended on for lubricating the piston pin and camshaft bearings, which in that case are provided with pockets, but some designers prefer to conduct oil to all these bearings through tubes or passages. Aside from the fact that trough-splash lubrication cannot be used on V motors there is no difference between the lubrication systems of these and vertical motors, respectively.

In all pump-operated systems the rate of circulation or the oil pressure increases with the engine speed. It is held by some engineers that the rate of oil feed should also increase with the load on the engine. This theory was first propounded and acted on by the various licensees under the Knight sleeve valve engine patent, who use splash troughs under the connecting rod heads which are raised and lowered through connection with the throttle lever. This arrangement is illustrated in the chapter on these engines. Recently some makers of poppet valve engines have adopted a similar method of lubrication control. Thus in the Hudson engine, which is fitted with a horizontal plunger type oil pump, operated by an eccentric off the camshaft, a control eccentric is provided which is connected to the throttle lever and limits the stroke of the plunger toward the camshaft.

With splash systems the difficulty is encountered that when a car mounts a grade the rear wall of the splash troughs, which then determines the oil level in the troughs, is lowered relative to the lowest position of the oil splashers, with the result that less oil is splashed just when more is wanted. This can be prevented by determining the oil level by a standpipe near the forward wall of each trough and making the walls somewhat higher than the standpipe, or by making the rear wall higher than the forward one.

Manufacture of Crank Cases—One of the first operations on the castings of a divided crank case is to face off the surfaces for the joints between the crank case and the cylinders and between the several parts of the crank case. Owing to the way these surfaces are spread out, particularly the surfaces at the joint between the halves, and to the fact that the castings are of aluminum, an easy cutting metal, these operations are preferably per-

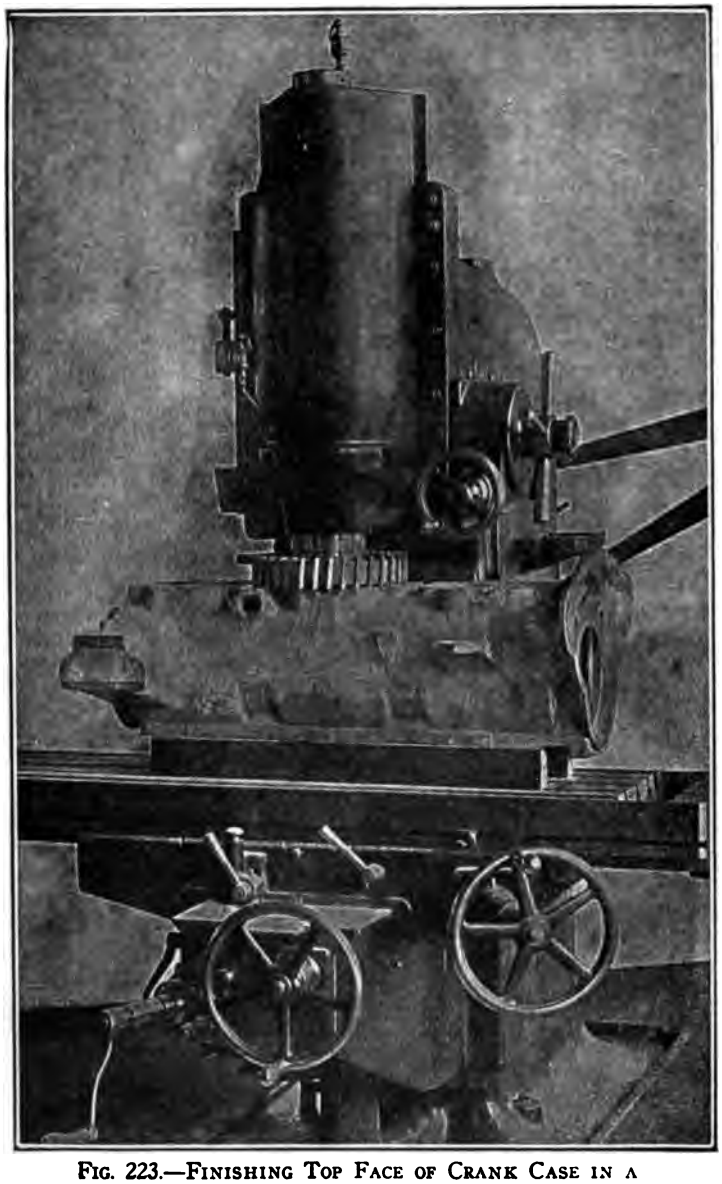

FIG. 223.—FINISHING TOP FACE OF CRANK CASE IN A MILLING MACHINE.

formed in a milling machine. Fig. 223 shows a crank case being machined in a Cincinnati vertical milling machine. The cutter is 15 inches in diameter and runs at 224 r. p. m., using a feed of 20 inches per minute. From ⅛ inch to $\frac{3}{16}$ inch of metal is removed in the roughing cut, and the finishing cut is about 0.010 inch deep. The work is done by first feeding across the piece to rough it off, then reversing the feed and coming back at the same rate for the finishing cut. The table is, of course, raised the 0.010 inch after the roughing cut has been taken and before the machine is reversed for the finishing cut. The surfaces produced are flat under a straight edge within 0.001 inch and parallel within the same limit.

In crank cases with tunnels for the camshafts there are three boring operations to be performed; namely, the boring for the crankshaft bearings or bearing plates and the boring of the two camshaft tunnels. These three operations are preferably performed at the same time, which can be done in a horizontal boring mill with special fixtures, as shown in Fig. 224.

A crank case requires numerous holes to be drilled, and this is one of the points where labor-saving machine tools can be applied to advantage. The top surface of the top half requires holes to be drilled for the cylinder bolts, the push rod guide bolts, and possibly also oil holes to the crankshaft bearings. The bottom surface of the top half requires holes to be drilled for the bolts holding the upper and lower halves together, for the bearing cap bolts, the bearing bushing dowels, and for oil passages from oil pockets. The lower half also requires numerous holes to be drilled. For all these operations a multiple drill press is a very serviceable tool. Fig. 225 shows a Baush multiple drill installed in the Cadillac plant in Detroit, set for drilling all of the drill holes in the top of a barrel type crank case. As many as twenty-two holes are thus drilled at the same time, at two or three different levels. A drilling jig is used, and the holes, therefore, must come accurate.

Bearing Bushings.—There are two main types of bearing bushings in use for the main and crank pin bearings of automobile engines, viz., bronze-backed, babbitt-lined bushings and die-cast bushings of babbitt metal. As babbitt metal is used for the bearing portion in both cases the bearing properties of both classes are the same, and whether one type or the other is preferable depends upon the relative weight and cost. The composition of S. A. E. standard babbitt is given in the appendix. The following information regarding the manufacture of the two types of bearings is taken from

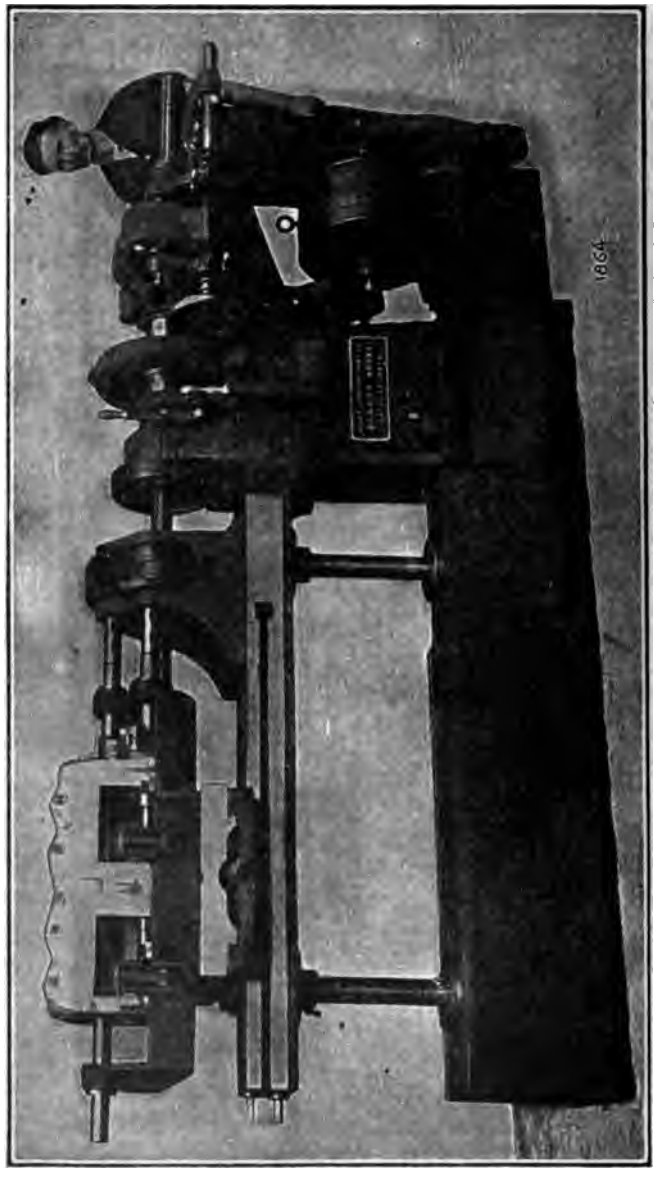

FIG. 224.—BORING CRANK CASE BY MEANS OF THREE-SPINDLE JIG IN BEMENT 46-INCH HORIZONTAL BORING MACHINE.

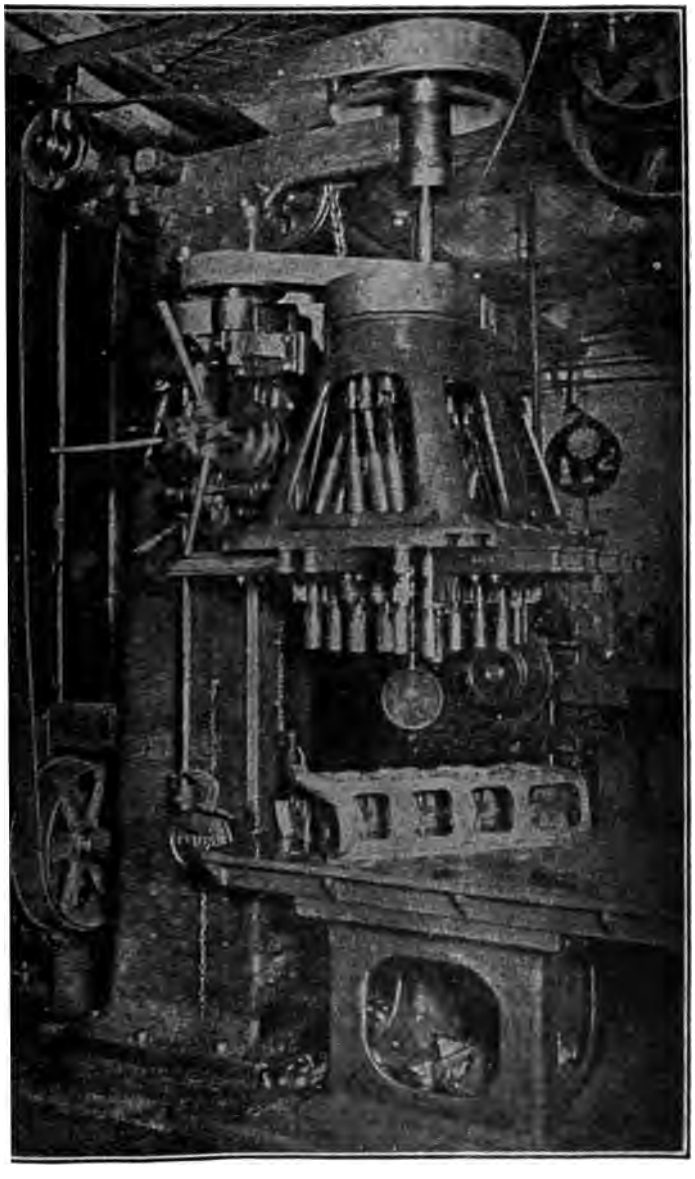

FIG. 225—DRILLING CRANK CASE IN BAUSH MULTIPLE SPINDLE DRILL.

a paper by Walter Betterton, read before the Graduates of the London Section of the Institution of Automobile Engineers in 1915:

Manufacturing Bronze-Backed Bushings.—There are two methods of manufacturing journal bearings lined with a plastic alloy. The first is to hand-pour the white metal lining, and afterwards machine the bore to the correct size. The second consists in finishing the machining of the shell and die casting the lining under pressure, leaving only a few thousandths of an inch for hand reaming when in position.

When the lining is hand-poured the shells should be lined as nearly as possible to the finished size, as the metal next to the mandrel gives a much better bearing surface than when it is turned down. Therefore, it is obvious that if the lining is die-cast in under pressure to the finished size an excellent bearing surface is obtained. It is essential that the two metals should be in perfect, i.e., homogeneous contact,

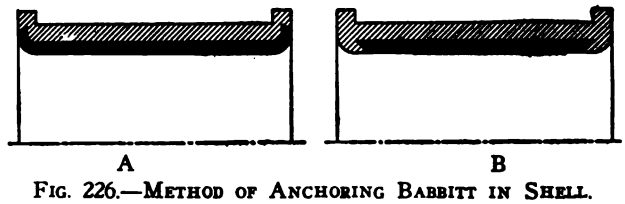

FIG. 226.—METHOD OF ANCHORING BABBITT IN SHELL.

otherwise, when in use, the oil will eventually penetrate between the lining and the shell, and the working pressure will set up a hydraulic pressure between the lining and the shell, with the result that the bearing will be rapidly destroyed.

Keying Babbitt Metal to Shell.—Two methods of anchoring the white metal to the shell are shown in Fig. 226. With the design shown at *B* the operating conditions of the white metal are not nearly so severe as in the case of a bearing made as shown at *A*. In the first method the compressive strength of the metal is really of no vital importance, as the major portion of the load is taken on the parallel portion at each end of the shell. The objection to this method is the liability of the bearing to run hot, particularly at the ends, in which case the ends of the bearing grip the shaft, thereby causing the temperature of the bearing to rise, and in all probability cause the metal to flow and run out, completely ruining the bearing. In the design shown

at A, the fullest advantage is taken of the white metal surface by carrying it completely up the radius, thus overcoming the gripping action at the ends. Another method consists in drilling four holes through the shell and counterboring them from the outside, the holes being filled by the babbitt.

Following are rules for the dimensions of bearing bushings, which have been found serviceable in practice with die-cast bushings: Let A be the diameter of the journal; B, the outside diameter of the bushing; C, the diameter of the flanges; D, the thickness of the flanges, and E, the diameter of the dowel lug, or stop; then for

Main Bearings	*Connecting Rod Bearings*
$B = 1.2\ A$	$B = 1.12\ A + 0.06$ inch
$D = 0.1\ A$	$D = 0.1\ A$
$E = 0.25\ A$	$E = 0.25\ A$
$C = B + 0.2\ A$	$C = B + 0.12\ A + 0.06$ inch

In determining the proper dimensions for shells to be lined with babbitt it must be taken into consideration that these shells must be sufficiently heavy to stand up against all strains coming upon them while being machined and lined.

Doweling Bearing Bushings.—The bush form of bearing, as employed for camshaft and timing gear journals, can be made of very light section. For instance, die-cast solid bushings of 2¼ inches bore and ⅛-inch thickness of metal have been successfully employed for a considerable time. Moreover, by the die casting process it is an easy matter to cast either a dowel pin or key in the bearing to prevent the latter from turning. This does away with the necessity of drilling the oil hole when the bearing is in position, as the dowel automatically locates the bearing before it can be forced into position. Further, it also does away with the necessity of forcing the bushing in under heavy pressure; and, further still, that of drilling and tapping a hole in the housing for a dowel pin to prevent the bushing from turning around. A bearing bushing should never be forced into position under heavy pressure, but made merely a light push fit, and provisions should be made for a dowel screw or, preferably when die cast, a key to prevent turning around, instead of relying on the driving fit of the bushing to take care of this. Otherwise, owing to the light section, the pressure will set up strains which will release themselves if the bearing should run hot in service, which would cause it to "close in" on the shaft when it again resumed its normal temperature, and, consequently, cause it to give trouble.

Oil Grooves in Bearings.—Designers differ greatly on the question of oil grooves. In fact some of them are against providing any grooves whatever, holding that they reduce the effective bearing area and also serve to break down the oil film. However, in view of the fact that fully 90 per cent. of the engines manufactured today are fitted with bearings having oil grooves, their advantage seems to be generally admitted. Properly designed oil grooves both distribute the oil over the surface of the journal and collect what would be forced out at the ends, and return it to some point where it can be used again.

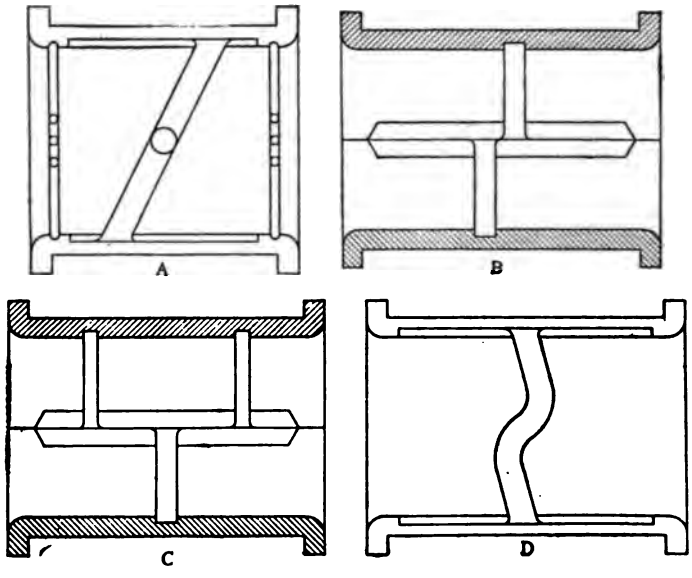

FIG. 227.—OIL GROOVES SUITABLE FOR USE WITH FORCE FEED LUBRICATION.

At *A*, in Fig. 227, is shown a form of grooves often used in connection with force lubrication for collecting the oil which would otherwise be forced out at the ends. The central oil groove in the same figure is for the purpose of distributing the oil over the surface of the journal. Bearings are sometimes fitted which have an annular groove cut in the center. Whenever a groove of this type is employed it should be staggered, as shown at *B* and *C* in Fig. 227, so as

to prevent the formation of a ridge on the shaft when wear takes place. If the bearing be die cast it would be better to make this groove as shown at *A* and *D*, in which the oil has a free passage without being diverted, as in the case of the staggered groove.

Bearings for Splash Oiling.—When splash lubrication is employed for the bearings, the oil should be introduced at the point where the forces acting tend to separate the bearing from the journal. It is considered an advantage, when dealing with connecting rod heads, to have oil holes in the top

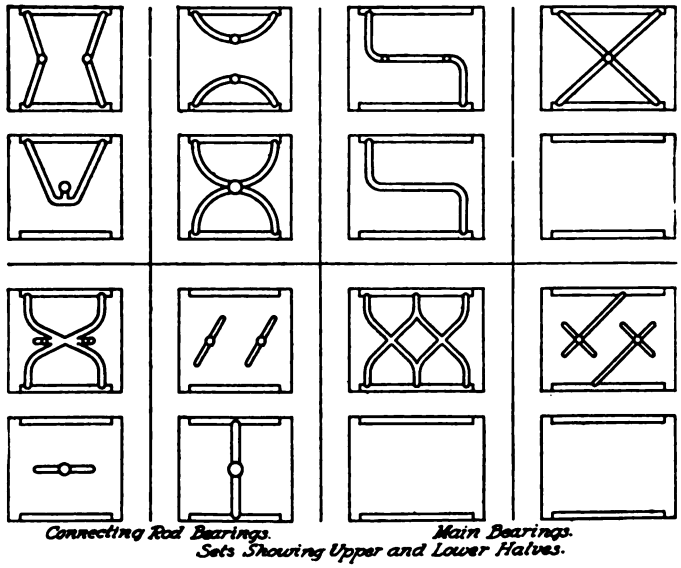

FIG. 228.—OIL GROOVES FOR USE WITH SPLASH LUBRICATION.

half as well as in the bottom half, in which case the oil splashed on to the connecting rod member finds its way into the bearing when the inertia force tends to separate the bearing from the journal on the upper side. On the other hand, when forced lubrication is employed the oil should be introduced at the point of maximum pressure. In this case the oil generally enters the crankshaft through a hole in the main bearing journal, which connects with a hole in the head journal, the supply being maintained by an annular groove in the bearing. With splash lubrication very good results have been

obtained by drilling a hole at right angles to the axis of the bore, through the center of the connecting rod head, the oil finding its way into the chambers of the joints (see Fig. 228). After the oil has been distributed over the surface of the journal care must be taken to see that it is not wiped off before reaching the place for which it is intended, therefore the bearing should be chamfered at the joint so as to make a recess in which the surplus oil may gather and which will further assist, when necessary, in distributing the lubricant.

The most popular form of hand cut oil groove is that illustrated at the top of the second column in Fig. 228. The oil here enters through a hole at the center of the bearing and is distributed through X-shaped grooves over the whole surface, these grooves opening into the chamfer at the joint between the half bushings. Neither the grooves nor the chamfer must extend to the end of the bushing, as that would allow the oil to escape from the bearing, and if shims are used for adjusting the bearing, they must come up close to the bushing, so as to allow no chance for the oil to get out.

Manufacture of Split Bronze Bushings—The old method of making split bushings consists in casting the bearings solid in halves, planing the faces which are to go together and then soldering the halves together, after which they can be machined like single piece bushings. After the machining operations are completed the bushings are heated to such a degree that the solder melts, and the halves are then separated and the solder is wiped off. This method works very well on a small scale, but, of course, some of the pieces are almost certain to come apart in the turning, and, besides, it is difficult to get the two halves absolutely identical by the ordinary methods of machining.

The jigs shown in Figs. 229 and 230 were designed by Herbert E. Barnes for machining split camshaft bushings that must be parted accurately in the centre, and were described by him in THE HORSELESS AGE of January 29, 1908. The bushings are cast in halves, with only little stock to remove on the inside. First they are milled off on the faces which come together, and then they are clamped singly in the jig, Fig. 229, to have the ends faced off and chamfered on the outside. The object of this chamfering is to permit of accurately centreing the bushing in the drilling jig, Fig. 230, and holding it on the cup mandrel, Fig. 231, for turning the outside. The facing and chamfering jig, Fig. 229, consists of a cast iron frame *A*, a table *B* held to the frame by screws and dowels, machine steel clamps *C C*, be-

tween which and the table *B* the bushing is clamped, and shoulder bushings *D D* to guide the tool *L*. The latter is made from tool steel, with milling teeth on the end extending over a little more than half the circumference. These teeth serve for facing the ends of the bushings, and the depth of cut is governed by the adjust-

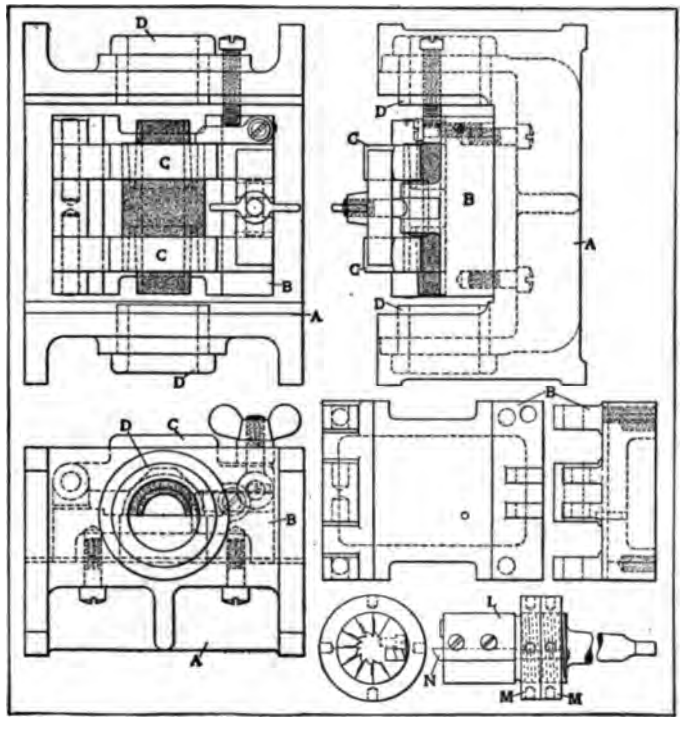

FIG. 229.—JIG FOR FACING AND CHAMFERING ENDS OF HALF BUSHING.

able locknuts *M M*, which are brought up against the ends of bushings *D D*. In the side of the tool is a slot into which the chamfering blade *N* is inserted.

The jig, Fig. 230, for drilling and reaming the hole in the bushing comprises a suitable cast iron frame for holding two cup bushings, one, *A*, being fixed for the reamer, and the other, *B*, being threaded to adjust up and down in a tapped hole, for

the drill. The hole in the drill bushing is counterbored at the inner end, so that the reamer will not be injured when it goes through the work.

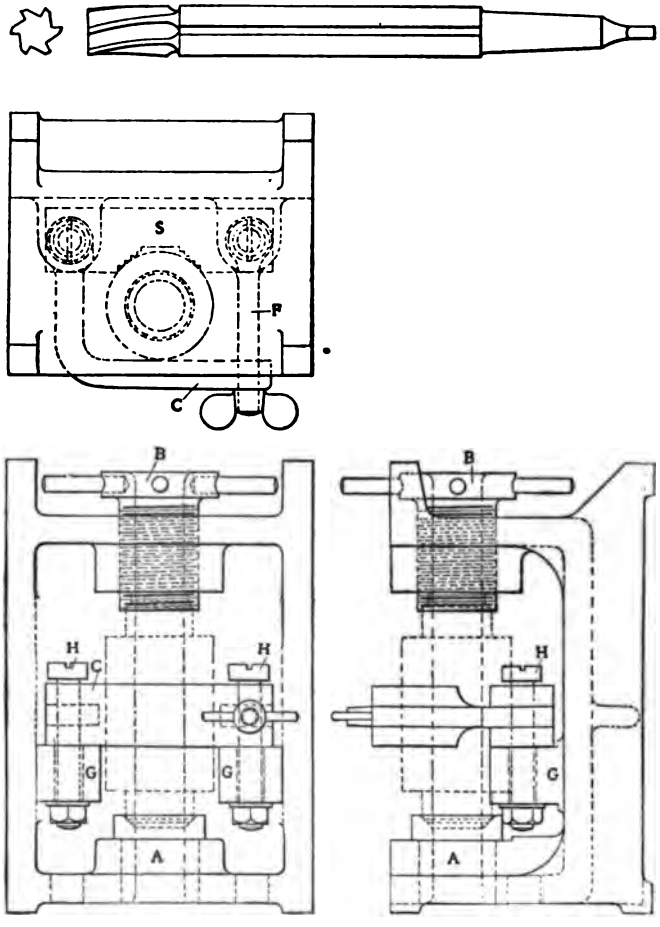

FIG. 230.—JIG FOR DRILLING AND REAMING BUSHINGS AND REAMER.

When the two mates are put in this jig and the screw bushing *B* is adjusted they are held by the floating clamp *C* and the strap on the swinging screw *F*. The clamp *C* rests on the two bosses

G, G, and is controlled by two studs *H, H,* which fit in the clamp and also extend through the bosser *G, G.* The holes in these bosses are one-eighth of an inch larger than the studs, which in turn are at least one-sixteenth of an inch larger than will permit them to bind the clamp.

The clamp *S* has teeth milled in its recess to grip the casting and prevent its turning with the tool, without undue pressure being used to hold it. This freedom of the clamp is provided so as to avoid any tendency to cramp the work or displace it in the cup bushings.

A four lip, straight flute drill, ground nearly flat, will give the best results because of the cored hole in the bushing which is being machined. The reamer, shown in Fig. 230, should have its flutes cut in left hand spirals, and should be so made that the body is long enough to guide it all the way through the work that it does not leave the bushing during the entire cut. The cutting blades need not be more than 1¼ inches long.

Fig. 231 shows a mandrel for turning the outside of the bush-

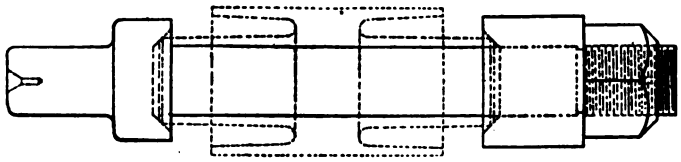

FIG. 231.—MANDREL FOR TURNING SPLIT BUSHINGS.

ings. It consists of a piece of steel turned to the proper size with a solid cup and a movable cupped collar, which is tightened by the nut and holds the work during the turning.

Machining Babbitt Lined Bronze Bushing—A somewhat similar method for producing split crankshaft bushings was described by O. Linley in the *Automobile Engineer* (London) for February, 1911. It is claimed to make the half bushings interchangeable, so it is not necessary to keep them together in pairs.

There is practically no machining allowance on the joint, the first operation being to face the halves up on a disc grinder. When this is done each half is taken singly and attached to the jig *A,* Fig. 232. This jig consists of a piece of mild steel turned with a wide collar, which is subsequently half removed by milling, and the half bushing is attached by means of the clip shown at *B.* Eye and hand alone are relied on for centreing the bushing longitudinally, so the attachment is a very quick and easy job, and the flanges can be turned to gauge size with almost

equal thickness. The next operation is to place a pair of bushings together in a split chuck for boring, turning the radius on the outer end, and recessing by the tool shown at *C*, the inside being left rough so as to provide a good surface to take the babbitt metal. The bushings are then babbitted and are bored out to size, the radius being put on at the end at the same time, and the outside is turned on the cup arbor shown at *D*.

Manufacture of Sand Cast Split Babbitt Bushings—Babbitt bushings are cast integral, generally $\frac{1}{8}$ inch thick, with an

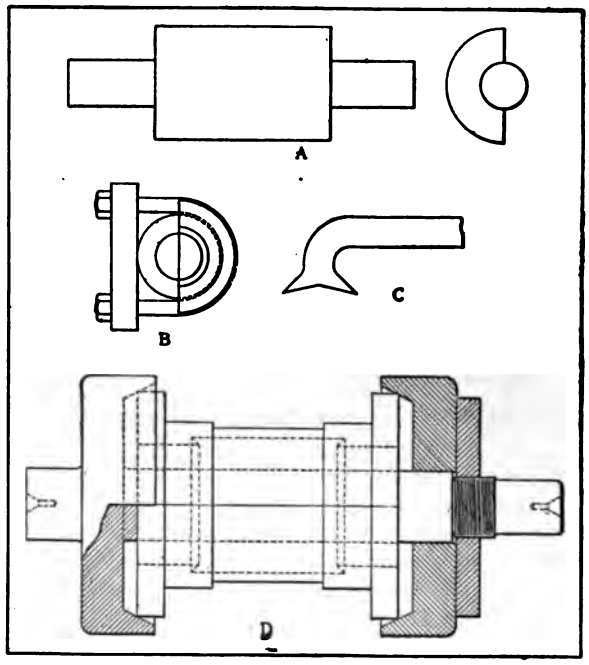

FIG. 232.—TOOLS FOR MAKING INTERCHANGEABLE HALF BUSHINGS.

inside diameter 0.03 inch small. It is advisable to consolidate or "compact" the babbitt so as to render it capable of withstanding greater bearing pressure, and to this end the cast bushing is placed in a die which is provided with several key slots, and a straight and a tapered mandrel are then successively driven through the bushings, which "compacts" the metal and forces some of it into the keyways. These mandrils leave the bushing very slightly under size (from 0.001 to 0.003 inch). The

remainder of the stock on the inside diameter is preferably removed by a reamer when the bushing is in place. The bushing is next split diametrically by means of a one-thirty-second inch saw, which necessitates the use of shims between the halves to the thickness of 0.033 inch. The bushings for the crankshaft main bearings are reamed in place by means of a long reamer in a horizontal or vertical boring machine, the bearing being left, say, 0.001 inch large. The keys on the upper halves of the crankshaft bushings for an engine in which all bearings are supported by the upper halves of the crank case should preferably be smoothened off some, so that these halves may be removed from the crank case without entirely removing the crankshaft, by "rolling" them around the shaft.

It has been found that in order to reduce the friction of a bearing to a minimum the bearing bushing must be relieved at the sides so that the journal is in contact with the bushing only on top and below. Rules for calculating the reduction of the friction and the increase in the unit pressure for different reliefs are given by Goodman in his "Mechanics for Engineers." In order to relieve the bushings the bearing caps are loosened and shims to the proper thickness placed between the upper and lower halves, whereupon reamers of gradually increasing size are run through the bearings until the full relief is attained.

CHAPTER XIV.

STARTING CRANK, MANIFOLDS AND MUFFLER.

Starting Cranks—The ratchets of starting cranks are made in many different forms, several of which are illustrated in Fig. 233. That shown at *B* is formed on the shaft of the starting crank itself, which is drilled out for the purpose, and has five end ratchet teeth milled on it. Frequently the engaging faces of these teeth are in a plane passing through the axis of the shaft. It is a much better plan, however, to make them at an angle of about 10 degrees with that axis, as in designs *A*, *B* and *D*, so that the teeth of the two ratchets will interlock, for

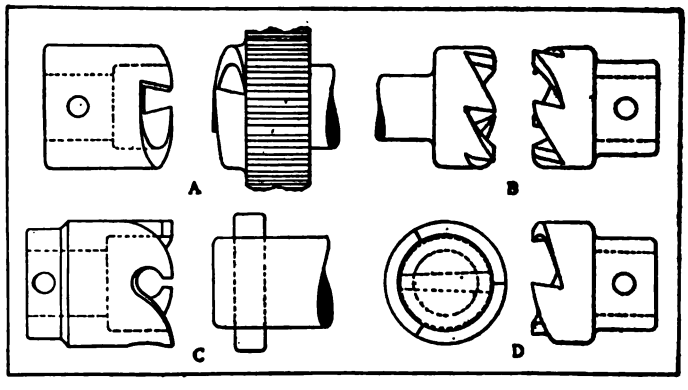

FIG. 233.—FORMS OF STARTING CRANK RATCHETS.

even though these ratchets are hardened, their teeth will wear in time, and when the points of the teeth have worn back the ratchet is liable to disengage while the operator is pulling hard on the starting crank, which is extremely annoying if not dangerous. It may here be pointed out that practically all motors turn right-handedly when looked at from in front of the car or the starting end.

Starting crank ratchets for four cylinder motors should preferably have two teeth, spaced 180 degrees, so that the starting crank handle will always be in the same position when the crank shaft passes the dead centre. For the same reason the ratchet for six cylinder starting cranks should have three ratchet teeth, spaced 120 degrees, as shown at *D*. In some cases the ratchet on the end of the crankshaft is replaced by a pin passing through same, with projecting ends with which the teeth on the starting crank ratchet engage, the teeth then being made of special form, as shown at *C*, Fig. 233. Generally the ratchet on the forward end of the crankshaft is keyed or pinned to the shaft, but sometimes, in order to save space in the longitudinal direction, it is formed integral with the crankshaft pinion (see *A*, Fig. 233).

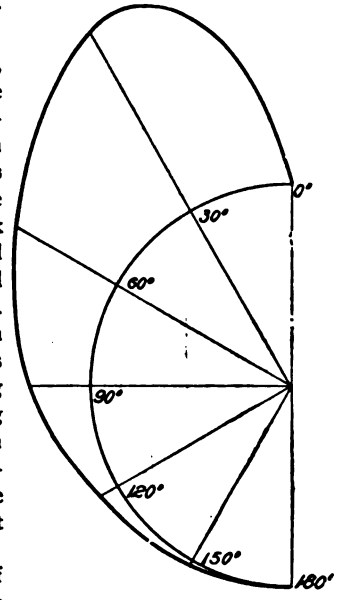

FIG. 234.—EFFORT REQUIRED ON STARTING CRANK AT DIFFERENT CRANKSHAFT ANGLES.

Angular Relation of Starting Crank to Crankshaft—In order to render the starting of the motor as easy and safe as possible the ratchets on the starting crank and the crankshaft must occupy certain definite angular positions. The resistance which the operator must overcome in turning the motor over by hand is due partly to the friction of the pistons in the cylinders and partly to the compression in one cylinder, the latter being generally the most important factor. The compression reaches its maximum value when the piston is at the top end of the stroke, but the crank effort necessary at that moment is zero, owing to the toggle effect of the crank and connecting rod. The crank effort required at various angles of the crankshaft during the compression stroke is shown by the diagram, Fig. 234, from which it will be seen that this effort reaches its maximum when the crank is about 25 degrees ahead of dead centre.

The usual method of starting the motor consists in pulling up

on the starting crank, and the operator undoubtedly applies his strength to the best advantage when the starting crank is in the horizontal position or half way up. Hence the ratchets on the starting crank and the crankshaft should be so arranged that the starting crank is half way up, or 90 degrees from the straight-up position, when one set of cranks has to travel 25 degrees more till it reaches the top dead centre position. A four cylinder crankshaft usually stops in such a position that all of its pistons are about mid-stroke, hence the crankshaft must be turned through a quarter circle to bring it to the dead centre or firing position, and since when the crankshaft is in the dead centre position the starting crank will be 90 — 25 = 65 degrees from the straight-up position, it will generally be possible to pick up the crankshaft at 65 + 90 = 155 degrees from the straight-up or 25 degrees from the straight-down position.

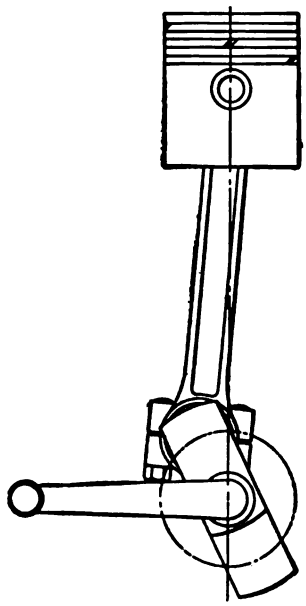

FIG. 235.—RELATIVE ANGULAR POSITION OF CRANKSHAFT AND STARTING CRANK.

The turning moment which it is necessary to impress upon the starting crank is proportional to the square of the bore and to the length of the stroke. It is, of course, impossible to make the length of the starting crank proportional to the turning moment required, as that would give exceedingly small cranks for small motors and entirely too large cranks for large motors. The following formula gives suitable values for the length of the crank:

$$L_c = d\sqrt{l} \quad \ldots\ldots\ldots\ldots\ldots\ldots\ldots\ldots\ldots\ldots (74)$$

The necessary cross-section of the crank arm may be calculated on the basis of 12,000 pounds per square inch stress in the metal when the operator applies an effort of 100 pounds to the crank handle. Supposing the starting crank to be 10 inches long, the bending moment is

$$10 \times 100 = 1{,}000 \textit{ pounds-inches.}$$

The section of the crank must, therefore, have a resisting moment

of 1,000 pounds-inches when subjected to a fibre stress of 12,000 pounds per square inch. In the case of the 4 × 5 inch motor used in our calculation, making the thickness or smallest dimension of the arm one-half inch, the width or largest dimension near the hub figures out to about one inch, if the arm is made of solid rectangular cross-section. The crank arm is frequently drop forged with a channel section, the open side of which is placed toward the rear. The starting handle should be about one inch in diameter and not less than 5½ inches long. It should be provided with a brass tubular or hardwood grip which turns freely on the pin or stud, so as not to injure the operator's hands. The handle is sometimes drilled out for lightness and is generally expanded into the crank arm. Pleasure cars are now almost invariably provided with electric starters and the crank is made removable and carried in the tool box, the socket for it being closed by a cap.

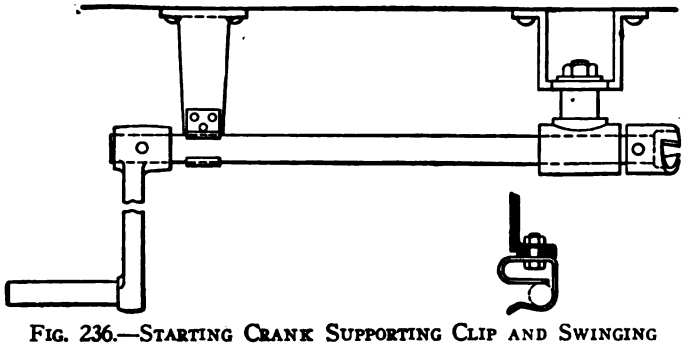

FIG. 236.—STARTING CRANK SUPPORTING CLIP AND SWINGING BRACKET.

Locking Starting Crank—The starting crank must not be allowed to hang down when the car is in motion, as its grip is generally considerably lower than the front axle, and is therefore likely to be struck by obstructions on the road.

On motor trucks it is not desirable that the handle of the starting crank extend forward when not in use. For convenience in starting the handle must project ahead of the bumper with which most trucks are fitted, and if it does this while not in use it is apt to be damaged by collision with some object. To prevent such damage the shaft of the crank on motor trucks is generally provided with a hinge joint so that after the motor has been started the crank can be swung back and held in a clip secured to the front cross member of the frame. Fig. 236 shows one construction serving this purpose. Instead of the shaft of

the crank being hinged it is supported in a rotatable bearing. The sub-figure shows a simple form of clip for this purpose.

Fig. 237 shows the variation of the starting and low speed running resistance of automobile motors as a function of the total cylinder displacement in cubic inches. This diagram, which is taken from a paper read by C. E. Wilson before the Society of Automobile Engineers, is of value in the design of self-starters.

Inlet Manifolds.—The inlet manifolds present a special problem for the designer, since they must be so designed that each cylinder of a multi-cylinder motor receives substantially the same

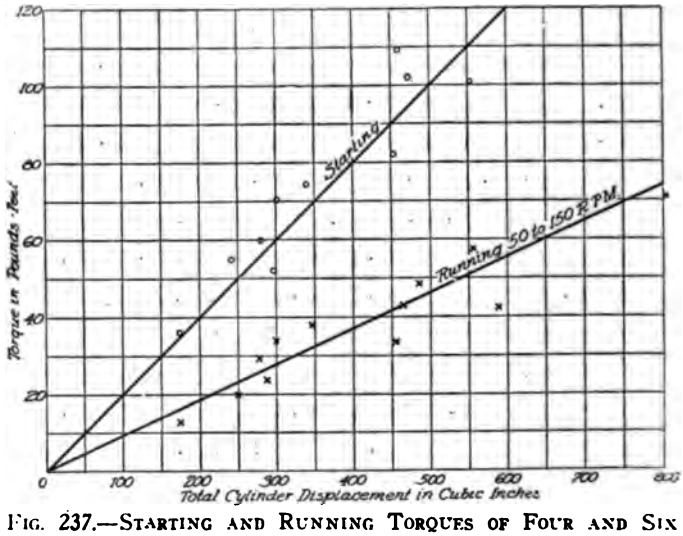

FIG. 237.—STARTING AND RUNNING TORQUES OF FOUR AND SIX CYLINDER MOTORS.

charge, both quantitatively and qualitatively. That is, each cylinder must receive the same amount of combustible mixture as every other cylinder, and the mixture received by any cylinder should contain the same proportion of gasoline as that received by any other cylinder, thoroughly gasified and mixed with the air.

Where the cylinders are cast in pairs the inlet ports are now almost universally siamesed, so that in the case of a four cylinder motor the "manifold" has only two branches and is really a Y or a T. Inlet manifolds are cast of aluminum, brass or malleable iron, and are sometimes made of drawn brass tubing and cast fittings or solely of brass tubing bent and brazed together.

The inlet pipe is made with an internal diameter equal to 36 to 40 per cent. of the cylinder bore. Its length varies according to the location of the carburetor. When the fuel is fed by gravity from a tank located inside the front seat the carburetor must be located low, so that the fuel may always be under a head, even on the steepest upgrades. On the other hand, when the fuel is fed by gaseous pressure the carburetor is placed as high as possible. in order that its adjusting means may be as accessible as possible. Sometimes the carburetor is located on the opposite side of the motor from the valves, and the inlet pipe must then extend across the top of the engine or a cored inlet passage must be provided in the cylinder casting from the valve side to the opposite side. On the whole a short length of exposed inlet pipe is preferable, because in cold weather the gasoline, which has been vaporized in the carburetor by means of the heat supplied by the water

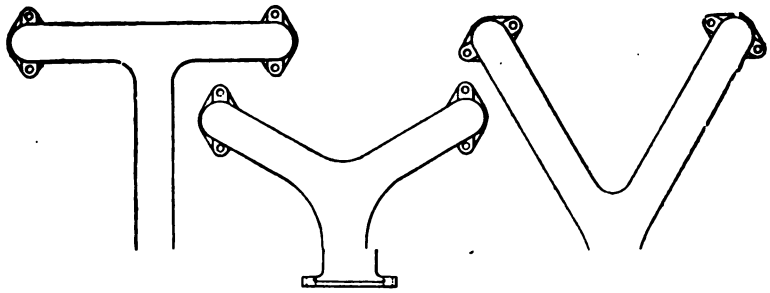

FIG. 240.—SIX CYLINDER INLET MANIFOLD.

cast with four longitudinal ribs to help cool it. The walls are generally cast one-eighth of an inch thick. The exhaust manifold is fastened to the cylinder casting in the same manner as the inlet manifold, and at its rear end it turns down through an angle of 45 degrees and is flanged for connection to the exhaust pipe leading to the muffler. Some designers increase the diameter of the manifold from the front to the rear end, but usually it is made of uniform size throughout its length. In six cylinder motors the exhaust manifold is sometimes in telescoping sections, permitting of its free longitudinal expansion and contraction. The manifold may reach almost red heat when the motor operates continuously at full load, and will naturally expand considerably. The crank chamber, on the other hand, which determines the distance apart of the cylinders, does not appreciably heat up; hence if no provision was made for the expansion of the manifold it and the cylinders would be severely strained. There is, of

course, the same need for expansion joints in a four cylinder exhaust manifold as in a six cylinder.

Fig. 241 shows an arrangement of inlet and exhaust manifolds on the same side of the motor. The exhaust manifold is then generally swung upward and the inlet manifold downward so as to avoid interference, and the two are mostly secured in place by means of yokes.

Effect of Timing Order—The explosion in a four cylinder motor may be timed in either of two orders, viz.:

1—2—4—3,
1—3—4—2.

With siamesed inlet ports and a symmetrically arranged inlet manifold neither of these firing orders has any appreciable advantage over the other. But if there are four individual cylinders and a manifold of T form is used, then, it is claimed, the last men-

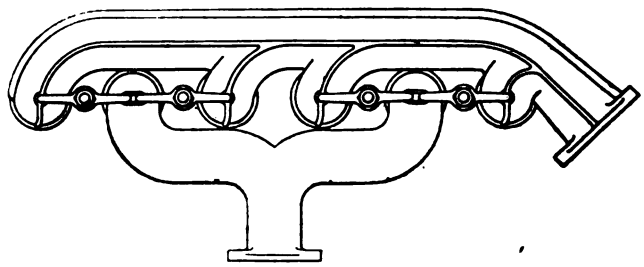

FIG. 241.—INLET AND EXHAUST MANIFOLDS ON SAME SIDE OF MOTOR AND SECURED BY YOKES.

tioned firing order is the preferable one, for the following reason; it will be noticed that with the first mentioned firing order the inner cylinder of a pair draws in its charge immediately after its mate. It was pointed out in the chapter on "Valves and Valve Gear" that the inlet valve is generally given a lag of 30 degrees, so as to enable it to fill more nearly completely. The inlet valve opens with a lag of only 10 to 15 degrees. Now, suppose cylinder No. 1 to have completed its inlet stroke. About 10 degrees later, while its inlet valve is still being held open to enable it to draw additional charge, the inlet valve of cylinder No. 2 opens, and since there is considerable suction in this cylinder and it is nearest to the carburetor, the flow of gas to cylinder No. 1 is thereby prematurely stopped. On the other hand, with the timing order last mentioned the outer one of a pair of cylinders always follows the inner one, and since the distance from the carburetor to the outer cylinder is greater than to the inner cyl-

inder, the inner cylinder is not "starved" by the opening of the inlet valve to the outer cylinder—at least not to the same extent.

The firing order is of more importance in a six cylinder motor, however. We found that the exhaust valves remain open for about 230 degrees of crank motion. Now, in a six cylinder motor the exhaust valves begin to open at intervals of 120 degrees, so two exhaust valves are open simultaneously practicaly all the time. This overlapping of the exhaust periods is shown graphically in Fig. 242. Suppose that the exhaust valve opens with 45 degrees lead and closes with 5 degrees lag; then, when the exhaust valve of one cylinder begins to open the exhaust valve of the preceding cylinder is still fully open, and remains open during another 110 degrees of crank motion, so that if the two cylinders are adjacent to each other and connected to the same exhaust manifold, and especially if the exhaust ports of the two cylinders are siamesed, exhaust gases must "blow over" from the

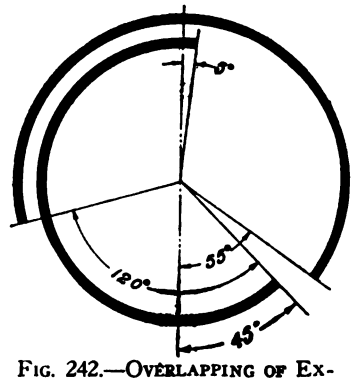

FIG. 242.—OVERLAPPING OF EXHAUST PERIODS IN SIX CYLINDER MOTORS.

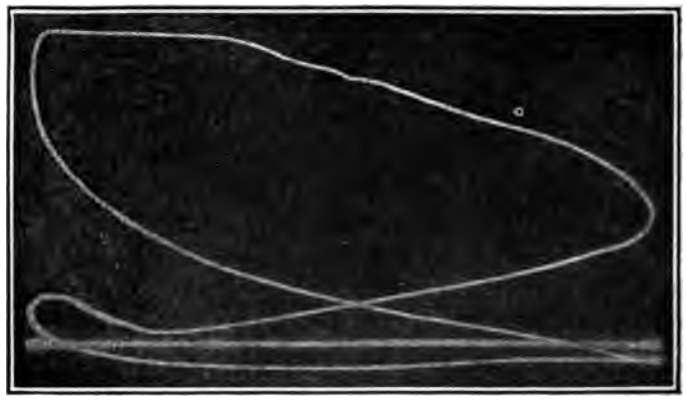

FIG. 243.—MANOGRAPH DIAGRAM SHOWING EFFECT OF EXHAUST FROM ONE CYLINDER ENTERING ANOTHER.

cylinder just beginning to exhaust into the one cor haust stroke, thus interfering with the evacuatio This effect is brought out very clearly in Fig. 24 an indicator diagram of a six cylinder motor.

This difficulty can be partly overcome by so arr ing order that the two cylinders in one pair never sion. For instance, the following three firing orders

1—4—2—6—3—5,
1—5—3—6—2—4,
1—3—2—6—4—5.

The surest way to prevent interference of the exhausts succeeding cylinders is to provide two exhaust manifolds, one fo the three forward and the other for the three rear cylinders, connecting to a double exhaust pipe leading to the muffler.

Firing Orders of V Motors.—In V engines the valves of oppositely located cylinders are operated by a common cam, generally through the intermediary of bell cranks, or the camshaft is provided with one cam for each valve to be lifted. In the former case the number of firing orders is limited. For instance, in an eight-cylinder 90-degree V engine, if the crankshaft turns right handedly (looked at from the front), any left-hand cylinder (looked at from the rear) must fire either 90 degrees or 450 degrees of crankshaft motion after the corresponding right-hand cylinder. These motions correspond to 45 degrees and 225 degrees of camshaft motion. Now it would be impossible to get the two cam followers on the cam so close together that one of the valves would begin to lift 45 degrees of cam motion after the other, owing to interference between followers, hence the left-hand valve must begin to lift 225 degrees of cam motion after the right-hand valve. As an explosion occurs every 45 degrees of cam motion, this means that the left-hand valve of a given pair of cylinders will be fifth to lift after the corresponding right-hand valve. Combining this order with the two possible firing orders for each set of four cylinders we get the following two possible firing orders for an eight-cylinder motor in which a single cam operates two valves:

1 *R* — 4 *L* — 2 *R* — 3 *L* — 4 *R* — 1 *L* — 3 *R* — 2 *L*
1 *R* — 4 *L* — 3 *R* — 2 *L* — 4 *R* — 1 *L* — 2 *R* — 3 *L*

The latter of the two firing orders is generally used, probably because it happened to be adopted by one of the pioneers in the V type engine field.

Similarly in a twelve-cylinder engine opposite cylinders whose pistons work on the same crank pin must explode at

an interval of either 60 or 420 degrees of crankshaft motion, equal to 30 and 210 degrees of camshaft motion, only the latter of which is practical with the ordinary types of cam followers. In such an engine explosions succeed each other at intervals of 30 degrees of cam motion, hence in a right handedly rotating engine, if cylinder 1 *R* is first to explode cylinder 1 *L* will be eighth, and there will be the same interval between the explosions in any other pair of oppositely located cylinders. Combining this firing order for oppositely located cylinders with the three most desirable firing orders for each set of cylinders we get the following three firing orders for the twelve:

1 *R* — 6 *L* — 4 *R* — 3 *L* — 2 *R* — 5 *L* — 6 *R* — 1 *L* — 3 *R* — 4 *L* — 5 *R* — 2 *L*

1 *R* — 6 *L* — 5 *R* — 2 *L* — 3 *R* — 4 *L* — 6 *R* — 1 *L* — 2 *R* — 5 *L* — 4 *R* — 3 *L*

1 *R* — 6 *L* — 3 *R* — 4 *L* — 2 *R* — 5 *L* — 6 *R* — 1 *L* — 4 *R* — 3 *L* — 5 *R* — 2 *L*

Muffler Design—Automobiles must operate substantially noiselessly, and the gases from the exhaust must be passed through a muffler before they are discharged to the atmosphere. In the muffler the gases must be allowed to expand gradually and to cool, thereby reducing the pressure, which is the cause of the noise when they are discharged into the atmosphere directly. While it is an easy matter to so obstruct the passage of the gas from the cylinder to the atmosphere that the gases will be discharged without disagreeable noise, they must escape with comparative freedom, so that there will be no back pressure from them on the piston during the exhaust stroke, and this complicates the problem of muffler design.

The muffler is generally carried under the rear part of the frame of the car, as far away from the motor as possible, so the motor will exhaust into an exhaust pipe whose capacity is two to four times that of a single cylinder. This gives the hot gases a chance to expand and cool. It is, however, advisable to provide additional expansion volume in the muffler. The combined volume of the exhaust pipe and that compartment of the muffler which the gases enter first should not be less than six times the piston displacement of a single cylinder. This expansion chamber should have as large a surface as possible in contact with the atmosphere, so that heat may be rapidly abstracted from the gases. From the expansion chamber the gases are led through another chamber or series of chambers communicating by means of fine and sometimes tortuous passages, before they are finally discharged to the atmosphere. Sometimes these muffling cham-

bers are placed concentric with the expansion chamber and sometimes they are placed adjacent to it.

The muffler should preferably be so arranged that it can be taken apart for cleaning, since lubricating oil and solid carbon particles held in suspension by the exhaust gases will be deposited on the muffler walls, clogging the fine passages and thus increasing the back pressure. The muffler must, however, be of sufficiently strong construction to easily withstand the pressure of an explosion of a gasoline-air mixture at atmospheric pressure, since such explosions in the muffler are of common occurrence. The walls of the muffler must be so designed that they will not be set into harmonious vibration by the succeeding exhausts, and especially should they not be of any material with sonorous properties. A covering of sheet asbestos over the muffler will prevent ringing, but is undesirable on account of its heat insulating properties. The outer cylindrical shell should preferably be made

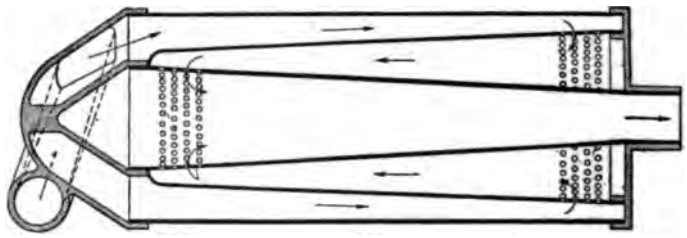

FIG. 244.—CONCENTRIC CYLINDER MUFFLER.

of very thin and soft sheet iron formed into a roll of several layers, held together by rivets. F. E. Watts found (THE HORSELESS AGE of October 2, 1907) that the entire capacity of the muffler is generally about thirteen times the piston displacement in one cylinder.

A type of muffler that is known to give very satisfactory results when properly proportioned is shown in Fig. 244. It consists of two cast iron heads which are connected by three concentric sheet metal tubes, the two inner ones of which are here shown conical, but may, of course, also be cylindrical. The gas enters the outer one of the three concentric chambers through a spiral passage cast on one of the heads. They expand in this chamber and then pass through fine perforations at the opposite end in the partition wall into the intermediate chamber, and thence through similar perforations at the near end of the innermost partition wall into the central chamber, from which they escape at the further end. This muffler is a development of an earlier

type, also of concentric cylindrical chamber form, in which the gases entered the innermost chamber and were discharged from the outermost chamber. It has the advantage over the latter type that it is easier to provide a comparatively large initial expansion chamber, and that the walls with which the hot gases come in contact are exposed to the atmosphere, hence the gases are cooled more rapidly. The swirl given to the gases by the spiral inlet passage brings the newly entering charge immediately in contact with the entire outer wall of the muffler and prevents any direct impact between the column of charge and a wall of the muffler.

Another form of muffler is shown in Fig. 245. This consists of a considerable number of flat cylindrical chambers of pressed steel with one head integral and the edge at the open end flanged out so as to fit over the closed end of the adjacent section. The heads are provided with openings through which adjacent cham-

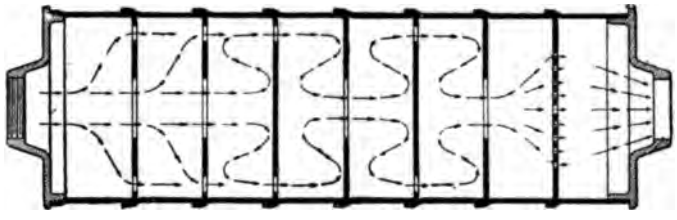

FIG. 245.—BAFFLE PLATE MUFFLER.

bers communicate, these openings being alternately at the centre and near the circumference, thus compelling the gases to follow a tortuous course through the muffler. The heads are made of cast iron and the gases enter and leave at the centres of the heads. The first and last partition walls differ from the others, the first having openings both at the centre and near the circumference to facilitate rapid expansion, and the last has fine perforations only, so as to break the discharge up into a large number of fine streams.

A third type of muffler, shown in Fig. 246, consists of two adjacent cylindrical chambers which communicate through a large number of small tubes secured in a partition wall cast integral with a central tube. This tube is cast with a partition wall at the centre of its length and with fairly large openings in its wall through which the gases enter the first expansion chamber; thence they pass through the small tubes already referred to into the second expansion chamber, and thence through small

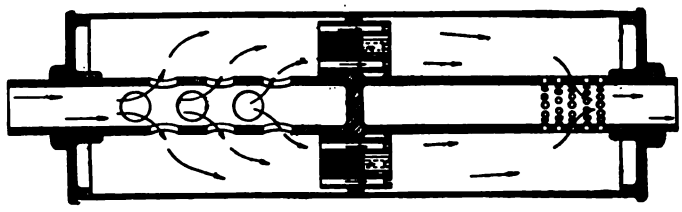

FIG. 246.—SMALL TUBE MUFFLER.

perforations in the wall of the second section of the central pipe through which they are discharged.

In Fig. 247 is shown a muffler of patented design, known as the Ejector muffler, which is used on a good many American cars. It consists of three expansion chambers formed by conical diaphragms, of which alternate ones are perforated near the centre and the outer edge, respectively. There is an axial tube leading through the muffler, the diameter of which is reduced at about the middle of its length. Part of the gas entering the muffler passes directly from the axial tube into the central chamber and through the second set of cones, while the rest enters the first chamber and passes first through the first set of cones and then through the second. A small portion of the exhaust is carried straight through to a nozzle at the farther end of the muffler, through which it is discharged to the atmosphere. This discharge, by reason of the familiar injector principle, creates a partial vacuum in the third expansion chamber, thus creating a suction which draws the gas out of this chamber in a more or less uniform stream. The gas passing through the expansion chambers naturally reaches the third chamber somewhat later than the gas passing through the axial tube reaches the nozzle, and the pressure in the third chamber at the moment when the gas from a new explosion enters that

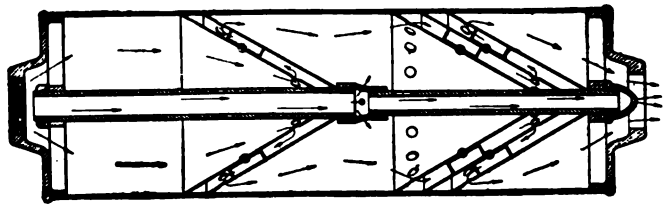

FIG. 247.—EJECTOR MUFFLER.

chamber is therefore always below atmospheric, which insures low back pressure.

Back Pressure of Mufflers—Several competitions and tests with the object of improving the design of mufflers have been held under the auspices of the Automobile Club of France. In a competition held in 1903 the tests were made on a single cylinder 8 horse power motor. A two-way valve was inserted in the exhaust pipe by means of which the exhaust could be turned either into the atmosphere or into one of the mufflers.

The second of these trials, conducted in 1905, brought out the interesting fact that a length of pipe connected to the exhaust manifold of the motor may increase the power ouput. During the first part of the trial all tests were made with the mufflers connected directly to the exhanst manifolds. It was then decided to place them at some distance from the motor, to reproduce the conditions on an automobile, and the connection was made by a pipe with three bends in it, 6 feet long and of 2 inches internal diameter, substantially the same as the manifold diameter. The engineer in charge of the tests anticipated that a certain correction would have to be made for the loss in this pipe, and proceeded to determine this loss. He was greatly surprised to find by repeated experiments that this pipe increased the power, and accurate tests showed the increase to be 1.4 per cent. The explanation offered for this phenomenon is that when the gases pass through the 6 foot pipe their temperature is reduced to quite an extent and they issue from the mouth of the pipe at a considerably lower speed than if discharged directly from the exhaust port, hence the resistance to their entrance into the atmosphere is less, which, of course, means less back pressure. The most silent mufflers in this competition reduced the power of the motors 10 to 11 per cent.

Tests conducted in the automobile laboratory of the University of Michigan in 1914, showed that while some mufflers at full engine load absorb 14 to 17 per cent of the engine power, the average percentage of the power absorbed by modern mufflers throughout the whole range of engine output is about three.

The final outlet from the muffler is generally through a pipe of considerably less cross-section than the exhaust pipe, which outlet pipe is sometimes tapered or reduced in section away from the muffler. Some mufflers arranged crosswise of the frame at the rear are provided with two outlet pipes, slightly inclined downwardly and with their outlet ends flattened so that

the exhaust is discharged in a sheet at the rear of the car, whereby the dust is kept down to a certain extent.

The chief requirements in muffler design may be summarized as follows: Use non-sonorous materials, such as soft sheet iron and cast iron and no brass or aluminum. Provide an expansion chamber of large size as compared with the volume of the individual cylinder. Keep the hot gases during the first part of their passage through the muffler in contact with surfaces exposed to the atmosphere so as to reduce their temperature and pressure as quickly as possible. Gradually decrease the cross sectional area of the passages so that the exhaust will issue from the outlet pipe in a practically continuous stream.

CHAPTER XV.

THE FLYWHEEL.

As has already been explained, in a four cycle motor there is only one explosion or power stroke in every four strokes of the piston. Consequently in a single cylinder motor a turning moment is impressed upon the crankshaft during only one stroke out of four, and there are three idle strokes between power strokes.

In order to have a practically usable motor the turning moment or torque must be substantially uniform throughout the cycle, and this makes it necessary to store up some of the mechanical energy developed during the power stroke and draw upon this store of energy during the three idle strokes, so that the rate of doing external work is practically constant. The flywheel forms this means of storing energy.

Variation of Crank Moment—Fig. 248 shows a crank moment diagram for a single cylinder 4x5 inch motor based upon a diagram showing an explosion pressure of 262 lbs. p. sq. in. and on a 10 inch connecting rod. The diagram shows the crank moment at low speeds, and the effect of the inertia of the reciprocating parts on the crank moment is neglected, partly for the sake of simplicity and partly because the flywheel function is most important when the engine runs at low speed, when the inertia effects of the reciprocating parts are negligible.

The cylinder develops approximately 415 foot-pounds of energy per explosion, net; that is, the indicated energy of the explosion stroke is 474 foot-pounds and that of the compression stroke 59 foot-pounds, leaving 415 foot-pounds of available energy. Now consider a crank with an arm 1 foot in length. The above amount of energy—415 foot-pounds—is expended during two revolutions of the engine crankshaft, and during these two revolutions the outer end of the 1-foot crank travels

$$2 \times 2 \times 3.14 = 12.56 \textit{ feet.}$$

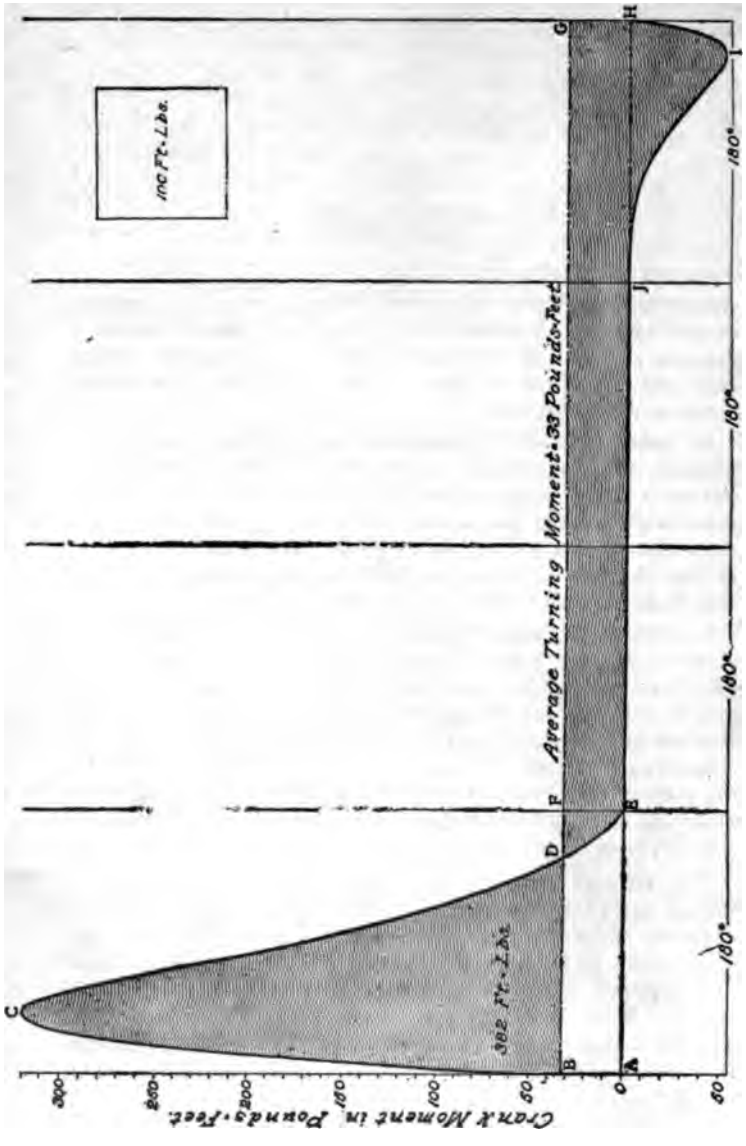
Crank Moment in Pounds-Feet
300
250
200
150
100
50
0
50
A
B
C
D
E
F
G
H
I
J
302 Ft.-Lbs.
Average Turning Moment = 33 Pounds-Feet
100 Ft.-Lbs.
180°
180°
180°
180°

The force acting at the outer end of the 1-foot crank arm is therefore

$$\frac{415}{12.56} = 33 \textit{ pounds (appr.)}$$

Consequently, the average turning effort or torque is 33 pounds-feet. We may consider the resisting moment of the load on the motor to be constant, and its value, then, is 33 pounds-feet. The resisting moment will very nearly be constant when the car is pulling up a steep hill at a very slow pace.

Referring now to Fig. 248, it will be seen that while the resisting moment of the motor is only 33 pounds-feet, the torque impressed upon the motor crankshaft during the power stroke rises as high as 320 pounds-feet. The excess torque goes to accelerate the flywheel and to store up energy in it. In the figure, the area *A B C D E* represents the total energy of one explosion = 474 foot-pounds. The area *B C D* represents excess energy developed during the first four-fifths of the explosion stroke, which is stored in the flywheel. This area represents 382 foot-pounds. The energy stored up in the flywheel during the power stroke is given out again during the three so-called idle strokes, doing the external work during these three strokes, represented by the rectangle *E F G H*. and the work of compression represented by the area *H I J* In reality the flywheel begins to supply some of the energy necessary to perform the outside work at the point *D*, before the end of the power stroke. The area *D F G H I J E*, representing the total energy given out by the flywheel during one cycle, is exactly equal to the area *B C D*, representing the energy absorbed by the flywheel during one power stroke.

Constructions similar to Fig. 248 enable us to determine the relative amount of flywheel capacity theoretically required for engines with different numbers of cylinders. In Fig. 249 is shown a crank moment diagram for a double cylinder opposed 4x5 inch motor, other conditions being the same as in Fig. 248. The crank moment during only one revolution is shown, as the diagram repeats itself every revolution. Measurement shows that in this case the flywheel has to absorb 302 foot-pounds of energy during the explosion stroke and give it out during the compression stroke. Fig. 250 shows a crank moment diagram of a four cylinder 4x5 inch motor for one-half revolution, this diagram repeating itself every half revolution. It will be seen that in this case the flywheel must store up

169 foot-pounds of energy during the first half of every stroke and give it out again during the last half. Fig. 251 shows a crank moment diagram for a six cylinder 4x5 inch motor for two-thirds of a revolution. In this case the flywheel must store up and deliver periodically 82 foot-pounds. The fly-

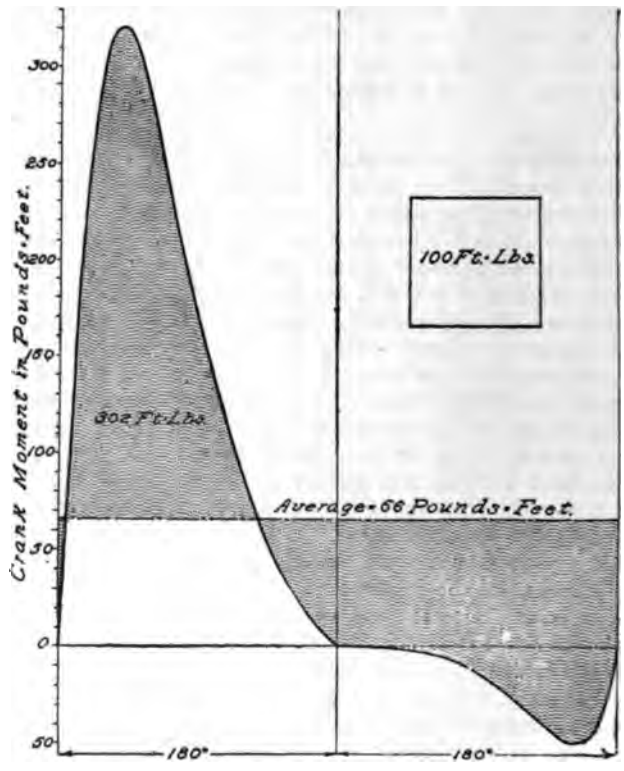

FIG. 249.—LOW SPEED CRANK MOMENT DIAGRAM OF DOUBLE CYLINDER EQUALLY TIMED 4x5 INCH MOTOR.

wheel capacities required with engines of different numbers of equal sized cylinders for the same degree of regularity of operation therefore compare as follows:

Single cylinder	100%	Six cylinder	22%
Dougle cylinder, equally timed	80%	Eight cylinder	11%
Four cylinder	44%	Twelve cylinder	4%

As a matter of fact, much greater flywheel capacities than those indicated are used on multi-cylinder engines, for the reason that a car with such an engine is expected to throttle down much lower than one with only a few cylinders.

Effect on Flexibility and Starting of Motor and Car.—There is another way of looking at the matter of flywheel capacity, namely from the standpoint of vehicle starting. The

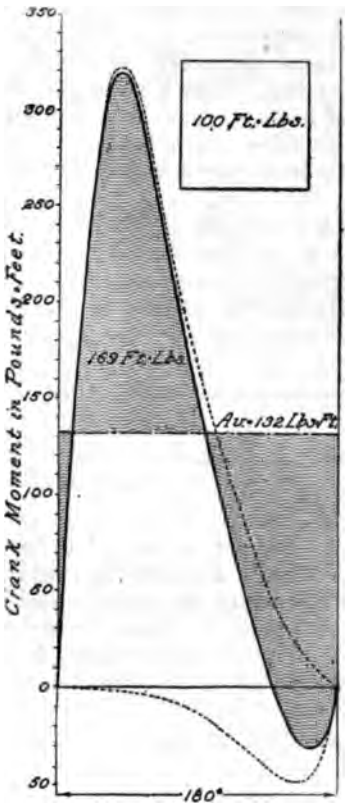

FIG. 250.—LOW SPEED CRANK MOMENT DIAGRAM OF FOUR CYLINDER 4x5 INCH MOTOR.

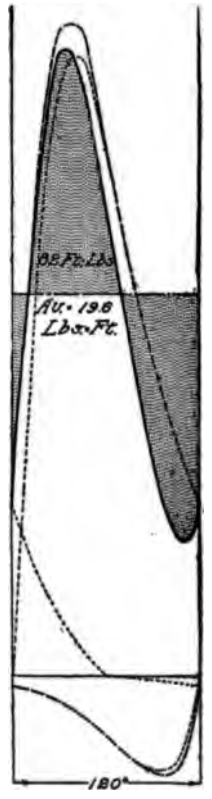

FIG. 251.—LOW SPEED CRANK MOMENT DIAGRAM OF SIX CYLINDER 4x5 INCH MOTOR.

throttle cannot be fully opened before the clutch is let in, as otherwise the engine would be speeded up excessively. Consequently if it is desired to get away fairly quickly the fly-

wheel must furnish a good deal of energy. If the flywheels of four and six cylinder motors were made as small as indicated by the above comparative table there would be considerable danger of stalling the motor when letting the clutch in rather quickly, especially if the power of the motor is low as compared with the weight of the vehicle and the low gear reduction ratio is not very great. The flywheels of these multicylinder motors are therefore generally made larger than indicated by the comparison. Moreover, when using four or six cylinders one naturally wants a very flexible motor which will run through a wide range of speed under full torque. With a single cylinder motor this is not well possible, as it would require an enormously heavy flywheel, but with a multicylinder motor the end can be attained with moderate flywheel capacity, and is, therefore, within the limits of practical possibility.

Another reason for making four and six cylinder flywheels somewhat larger than required by running conditions of the motor is that it facilitates starting of the motor. Without a flywheel it would be impossible for the operator of average

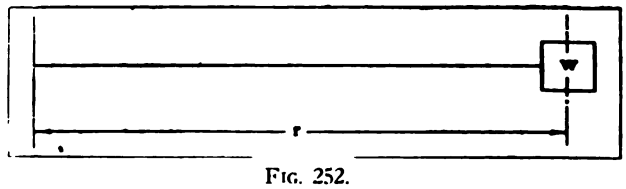

Fig. 252.

strength to turn the crankshaft of a motor of, say, 5 inch bore, against compression. The provision of a heavy flywheel enables him, when spinning the motor, to supply the requisite energy for compressing the charge at a practically uniform rate during two revolutions of the flywheel. The greater the flywheel capacity the less will be the fluctuation of the cranking resistance at a certain average cranking speed.

Energy Stored in Flywheel—The kinetic energy of a moving weight is

$$E = \frac{w v^2}{2 g} \textit{ foot-pounds}$$

when w is given in pounds, v in feet per second and g is the acceleration of gravity = 32.16 feet per second per second. Now, referring to the sketch Fig. 252, let w be the weight of a small particle of matter in the rim of a flywheel at a distance $\frac{r}{12}$ feet from the centre of rotation, and let the flywheel rotate with

an angular speed of $\frac{n}{60}$ revolutions per second. Then the velocity of the particle w is evidently

$$2\pi \frac{r}{12} \frac{n}{60} \textit{ feet per second,}$$

and the energy stored up by the particle w is

$$E = \frac{4 w \pi^2 r^2 n^2}{2g \times 12^2 \times 60^2} = \frac{w \pi^2 r^2 n^2}{259{,}200 g} \textit{ foot-pounds} \ldots\ldots\ldots\ldots (75)$$

The angular speed of the motor is generally expressed in radians per second—

$$\omega = \frac{2\pi n}{60},$$

and substituting this in equation (75) we have

$$E = \omega^2 \frac{w r^2}{288 g} \ldots\ldots\ldots\ldots (76)$$

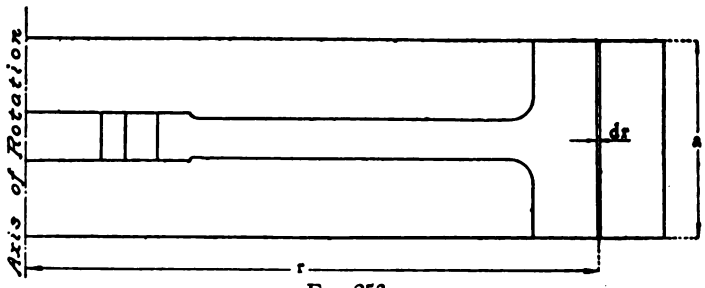

FIG. 253.

The expression $\frac{w r^2}{144 g}$ or $\frac{w}{g}\left(\frac{r}{12}\right)^2$ is known as the polar moment of inertia (I_p) and is a measure of the flywheel capacity. In calculating this dimension, w is expressed in pounds; $\frac{r}{12}$ represents feet, and g is expressed in feet per second per second, hence the polar moment of inertia or flywheel capacity is expressed in feet-pound-seconds^2. The stored energy may therefore also be expressed as follows:

$$E = \frac{I_p \omega^2}{2}$$

Now consider a flywheel with a rim of rectangular cross section, as shown in Fig. 253. Take a thin cylindrical shell of radius r inches and thickness dr. All the metal in this thin shell may be considered at a uniform distance r from the centre

of rotation. If the flywheel is made of cast iron—the common material—which weighs 0.26 pound per cubic inch, the weight of metal in the shell is

$$w = 2\pi r a\,dr \times 0.26 = 0.52\pi a r\,dr \text{ pounds},$$

and the velocity

$$v = \frac{2\pi r n}{12 \times 60} \text{ feet per second};$$

hence

$$v^2 = \frac{4\pi^2 r^2 n^2}{144 \times 3600}$$

and the energy stored up

$$E = \frac{0.52\pi a r\,dr \times \frac{4\pi^2 r^2 n^2}{144 \times 3600}}{2g}$$

$$= \frac{0.52\pi^3 n^2 a r^3\,dr}{259{,}200\,g} \quad \ldots\ldots\ldots\ldots\ldots\ldots(77)$$

In order to find the energy stored up in the entire rim we must integrate this expression between the limits r_1, the internal radius, and r_0, the external radius.

$$\int_{r_0}^{r_1} \frac{0.52\pi^3 n^2 a r^3\,dr}{259\,200\,g} =$$

$$\frac{0.52\pi^3 n^2 a}{259{,}200\,g} \int_{r_0}^{r_1} r^3\,dr =$$

$$\frac{0.52\pi^3 n^2 a}{259{,}200\,g}\left(\frac{r_0^4 - r_1^4}{4}\right) =$$

$$\frac{n^2 a}{2{,}068\,000}\left(r_0^4 - r_1^4\right) \text{ foot pounds} \ldots\ldots\ldots\ldots\ldots\ldots(78)$$

In practical work sufficient accuracy is obtained by considering the entire weight of the rim concentrated at a distance from the axis of rotation equal to the arithmetical mean between the inner and outer radii of the rim. The weight of the rim is

$$w = \left(r_0^2 - r_1^2\right)\frac{\pi}{4} a \times 0.26 \text{ pounds},$$

and the mean radius is

$$\frac{r_0 + r_1}{2} \text{ inches}.$$

The linear velocity of a point at the middle of the rim is therefore

$$2\pi \frac{n}{60}\left(\frac{r_0 + r_1}{12}\right) \textit{ feet per second.}$$

After these two values have been found they are inserted in the formula for kinetic energy and the calculation is carried through. As a rule only the energy stored in the rim is calculated with, though, of course, the spokes or web also have some flywheel effect.

Dependence of Flywheel Capacity Required on Bore and Stroke—In the foregoing we investigated the flywheel capacities required in motors with different numbers of cylinders. We will now consider the problem of how the flywheel capacity should vary with the bore and stroke, the number and arrangement of the cylinders remaining the same. Take a single cylinder motor, for instance. All the energy is developed during the power stroke, but the motor does work at a substantially uniform rate during all four strokes. The flywheel, therefore, must store up about three quarters of the energy liberated by the explosion. In reality the fraction is a little higher, because during the compression stroke the flywheel must supply the energy not only for doing the outside work but also for compressing the charge. The point is that a certain fixed percentage of the energy of each explosion is stored in the flywheel, and the fluctuation in its speed caused by the absorption and return of this energy must not exceed a certain percentage. Now, the energy of an explosion is directly proportional to the piston displacement or to the expression $b^2 l$ (b being the bore and l the length of stroke). We have already found an expression (76) for the energy storing capacity of the flywheel, and we may therefore write

$$b^2 l \sim \omega^2 \frac{w r^2}{288 g} \quad \text{.....(79)}$$

But the angular velocity ω increases as the length of the stroke l decreases, and vice versa. It was formerly considered that the two factors varied in direct inverse ratio, but it is now generally admitted that a long stroke motor will run at higher piston speeds than a short stroke one, and it is therefore advisable to write

$$\omega \sim \frac{1}{\sqrt{l}}$$

Inserting this value in proportionality (79) we have

$$b^2 l \sim \frac{1}{l} \frac{w r^2}{288 g}$$

$$b^2 l^2 \sim \frac{w r^2}{288 g} \quad \text{(80)}$$

An analysis of considerable data regarding flywheel dimensions on hand shows that the average proportions are as follows:

For single cylinder motors

$$\frac{w r^2}{288 g} = \frac{b^2 l^2}{875}$$

For double cylinder motors exploding at equal intervals

$$\frac{w r^2}{288 g} = \frac{b^2 l^2}{1000}$$

and for four to twelve cylinder motors

$$\frac{w r^2}{288 g} = \frac{b^2 l^2}{1100}$$

These equations can be simplified so as to give the weight in the rim directly—

For single cylinder motors

$$w = 10.6 \left(\frac{b l}{r}\right)^2 \textit{pounds} \quad \text{(81)}$$

for double cylinder motors with explosions equally spaced

$$w = 9.3 \left(\frac{b l}{r}\right)^2 \textit{pounds} \quad \text{(82)}$$

and for motors of four or more cylinders

$$w = 8.4 \left(\frac{b l}{r}\right)^2 \textit{pounds} \quad \text{(83)}$$

The outside diameter of the flywheel is a function of the length of stroke and is generally made

$$d_o = 3.3\, l \quad \text{(84)}$$

However, in determining this diameter the road clearance has to be taken into consideration, since the flywheel is usually the lowest part on the car, and on American roads a clearance of about 10 inches at the middle of the chassis is essential. It is to be presumed that now that long stroke motors are coming into favor the ratio between flywheel outside diameter and piston stroke will be reduced, since it is hardly practical to make the outside diameter more than 20 inches on a touring car. The advantage of large diameters in flywheels is clearly shown by equations (81) to (83), the required wheel rim weight being inversely proportional to the square of the mean radius of the rim.

The above equations give the average weight of flywheels as

fitted at present. It should be pointed out that a heavier flywheel makes it easier to spin the motor in starting, more difficult to stall the motor by letting in the clutch a little too rapidly, makes the motor more flexible and gives a more uniform torque, thus reducing the stresses in the transmission members and on the tires. Therefore, wherever a little extra weight is not of great importance, it is advisable to make the flywheel somewhat heavier than the weight given by the above formulæ. Also in motors with unusually high compression a slightly greater flywheel capacity than found from the equations should be provided, because the energy of an explosion increases with the compression pressure, and so does the work of compression.

A four cylinder 4x5 inch engine should have a flywheel with a mean radius of gyration of about 7.5 inches and the weight in the rim required according to equation (83) would be

$$8.4\left(\frac{4\times 5}{7\cdot 5}\right)^2 = 60 \textit{ pounds.}$$

Now, suppose that the resistance of the load is substantially constant, as it would be in pulling slowly up a steep hill on the low gear, requiring the entire torque of the motor. At what speed would the motor become stalled?

We found previously that in a motor of this size when running under full throttle the flywheel alternately stores and gives out 169 foot-pounds. The motor will stall, of course, when the maximum speed during a cycle, which is attained just before the end of the power stroke, is such that the energy stored in the flywheel is 169 foot-pounds. We then have

$$\left(2\pi n\right)^2 \frac{w r^2}{288 g} = 169$$

from which we find $n = 3.5$ revolutions per second or 210 revolutions per minute. Since the motor speed varies between this and zero during a cycle, the average speed just before stalling will be approximately half this or 105 revolutions per minute. Of course, the motor will run very irregularly at speeds only slightly exceeding this figure.

Centrifugal Force on Flywheel—When a flywheel revolves about its axis every particle of matter in it is subjected to centrifugal force which acts radially outward. The value of this force has already been given as

$$F = 1.226\ w\ n^2\ r,$$

where n is the number of revolutions per second and r the radius of rotation in feet, It will, however, be better to continue to express n in revolutions per minute and r in inches, in which

case we have

$$F_c = \frac{w\, n^2\, r}{35{,}240}$$

The weight w of the rim is approximately

$$2\ \pi\ r\ h\ a \times 0.26\ pounds.$$

where h is the radial depth of the rim in inches. Inserting this value in the equation for the centrifugal force we have

$$F_c = \frac{\pi\, r^2\, n^2\, h\, a}{68{,}000}\ (appr.)$$

This centrifugal force tends to rupture the rim in a plane passing through its axis. The component of the centrifugal force perpendicular to this plane is equal to one-half the total force multiplied by the ratio of the diameter to half the circumference

$$F_n = \frac{\pi\, r^2\, n^2\, h\, a}{68{,}000} \times \frac{1}{2} \times \frac{2\, r}{\pi\, r} = \frac{r^2\, n^2\, h\, a}{68{,}000}$$

This tension is taken up by two cross sections at opposite ends of a diameter whose combined area is $2\ h\ a$ square inches. The unit stress therefore is

$$S = \frac{\dfrac{r^2\, n^2\, h\, a}{68{,}000}}{2\, h\, a} = \frac{r^2\, n^2}{136{,}000}\ pounds\ per\ square\ inch.$$

Taking the tensile strength of ordinary cast iron to be 16,000 pounds per square inch, a flywheel would burst when running at a speed

$$n = \sqrt{\frac{16{,}000 \times 136{,}000}{r^2}}\ revolutions\ per\ minute.$$

The maximum value of r for automobile flywheels is about 9 inches, hence the bursting speed is

$$\sqrt{\frac{16{,}000 \times 136{,}000}{9 \times 9}} = 5{,}180\ rev.\ p.\ m.$$

Of course, if there are blowholes or similar defects in the casting it may burst at a lower speed. The ordinary 4x5 inch engine would not be able to exceed one-half this speed, and since the centrifugal force varies as the square of the number of revolutions per minute, it would then still have a factor of safety of 4. A few manufacturers have used steel flywheels, and steel founders have made efforts to introduce these wheels, but they stand little chance of general adoption, owing to their high cost. In regard to the safety of flywheels, it should be pointed out that this is further increased by a solid web, as very generally used. Where steel flywheels are used the outside diam-

eter is generally made somewhat greater than in the case of cast iron wheels. Thus the 110x140 mm. (4.4x5.6 inch) Mercedes motor has a cast steel flywheel with an outside diameter of about 21.5 inches.

Fluctuations in Car Speed—In connection with the flywheel capacity of the motor the flywheel effect of the car itself when going at speed must be taken into account. It was assumed so far that the resisting moment on the motor was constant. This, however, is by no means the case when the car is traveling at a fairly high speed. It then has stored up a great deal of kinetic energy, upon which it draws immediately the motor slows down in speed. A couple of examples will show the fluctuations in vehicle speed under more or less extreme conditions.

In a four cylinder 4x5 inch motor running at normal speed. it is found that the excess energy given out by the motor during part of each stroke is 140 foot-pounds. Owing to the inertia of the reciprocating parts, the motor gives out this excess energy during the last half of each stroke, instead of during the first half, as might be expected. Consequently the motor and the car will actually slow down immediately after an explosion and speed up just before an explosion. The 140 foot-pounds excess energy will speed up both the flywheel and the whole car. Since the flywheel is rigidly connected to the driving wheels, the speeds of the two will increase and decrease in the same proportion.

Denoting the weight and velocity of the car by capitals and the weight and velocity of the flywheel rim by small letters, we have

Total energy stored up at normal speed:

$$\frac{WV^2 + wv^2}{2g}.$$

Total energy stored up at minimum speed:

$$\frac{WV_1^2 + wv_1^2}{2g}.$$

We know that

$$\left(\frac{WV^2 + wv^2}{2g}\right) - \left(\frac{WV_1^2 + wv_1^2}{2g}\right) = 140 \textit{ foot-pounds;} \ldots\ldots (85)$$

also that

$$V : V_1 = v : v_1,$$

from which it follows that

$$v_1 = \frac{V_1}{V} v.$$

Substituting in equation (85)

$$\frac{W V^2 + w v^2 - W V_1^2 - w \frac{V_1^2}{V^2} v^2}{2g} = 140 \ldots\ldots\ldots\ldots\ldots\ldots (86)$$

We will assume that the weight W of the car with passengers is 2,500 pounds and the weight w of the flywheel rim 60 pounds. The flywheel rim has a mean diameter of 15 inches and its linear speed when the motor turns at 1,200 revolutions per minute is

$$\frac{3.1416 \times 15 \times 1200}{12 \times 60} = 78.5 \textit{ feet per second.}$$

We will suppose that the car is provided with 32 inch driving wheels, and that these are geared in the ratio of 3:1 on the high gear. The car speed then is

$$\frac{1200}{3 \times 60} \times \frac{32}{12} \times 3.14 = 55.8 \textit{ feet per second.}$$

Inserting the values thus found in equation (86) we have

$$2500 \times 55.8^2 + 60 \times 78.5^2 - 2500\, V_1^2 - 60 \frac{V_1^2}{55.8^2} 78.5^2 = 2 \times 32.3 \times 140$$

which when solved gives

$$V_1 = 55.77 \textit{ feet per second.}$$

Similarly we find that the maximum speed, near the end of the explosion stroke, is 55.83 feet per second. Consequently the car speed ranges between 55.77 and 55.83 feet per second, a variation of less than one-tenth of 1 per cent.

Now consider that the car is pulling up a steep hill on the low gear, which may be considered to be one-fourth as high as the high gear. Also let the engine be pulled down to 400 revolutions per minute. The car speed V is then

$$\frac{55.8}{3 \times 4} = 4.65 \textit{ feet per second}$$

and the flywheel rim speed v

$$\frac{78.5}{3} = 26.17 \textit{ feet per second.}$$

Substituting these values in equation (86) we have

$$2500 \times 4.65^2 + 60 \times 26.17^2 - 2500\, V_1^2 - 60 \frac{V_1^2}{4.65^2} 26.17^2 = 169 \times 2g,$$

which when solved gives

$$V_1 = 4.38 \textit{ feet per second.}$$

In the same way we find that the maximum momentary speed

$$V_2 = 4.91.$$

The speed fluctuation under these conditions is, therefore,

$$\frac{(4.91 - 4.38)\, 100}{4.65} = 11.4 \textit{ per cent,}$$

of the average. The fluctuation would be still greater if under the above running conditions one of the cylinders should miss an explosion. It can be easily shown that in that case 584 foot-pounds of energy would be withdrawn from the system and the speed would drop to 3.62 feet per second. A sudden drop in the speed of the car from 4.91 to 3.62 feet per second would, of course, be very distinctly and disagreeably noticeable.

Rim and Web or Spokes—The flywheel generally serves as one member of the friction clutch, and this determines its shape to quite an extent. If a conical clutch is used the rim of the flywheel is generally bored out on the inside to form a conical surface whose generatrices make an angle of about 7.5 degrees with the axis of the cone. Fig. 254 shows a sectional view of a typical flywheel chambered out for a conical clutch. If a multiple disc clutch is used a housing for the clutch is generally cast integral with the flywheel, of a considerably smaller diameter than the rim. In proportioning the rim it is advantageous to make it rather wide faced and not very deep radially, so as to make the mean diameter as nearly equal to the outer diameter as possible. In American practice most flywheels are now made with solid webs of half an inch thickness. If the flywheel is bolted to an integral flange on the crankshaft the web is generally formed with a circular offset which is bored out to receive the flange, so as to accurately centre the flywheel. The number and size of bolts to use and their distance from the axis was discussed in the chapter on the Crankshaft. It may here be repeated that it is advantageous to use dowel bushings around the bolts.

Keying Flywheels—Occasionally the flywheel is secured to the crankshaft by means of a key. On the whole this method is not very satisfactory, as the key is apt to loosen sooner or later and to cause a very disagreeable knock. Where this construction is used the key should be made as large as it can conveniently be made. In some constructions of this type the shearing area of the key is

$$a = \frac{w r^2}{1350 d},$$

where w is the weight of the rim in pounds, r the mean radius of the rim in inches, and d the diameter of the shaft where the flywheel is keyed to it. In stationary gas engine practice, where flywheels are commonly keyed to the crankshaft, the hubs are made of a diameter equal to twice the diameter of the shaft and of a length equal to 1.75—two times the diameter of the shaft. The width of the key is made about one-fifth the shaft diameter.

Since the materials are the same, these proportions should also be best for automobile practice, and the few instances of keyed flywheels of which we know accord very well with these rules.

One plan resorted to in order to increase the strength of keyed joints of cast iron flywheels is to provide them with a steel flanged hub to which the web of the flywheel is bolted in the usual way, as shown in Fig. 254. Steel is superior to cast iron in respect to both compressive and shearing strength, and with a certain size of key the joint will undoubtedly be more secure if it is between steel and steel than when it is between steel and cast iron. It is customary when keying a flywheel to the crankshaft to taper the bore of the hub and the seat for it on the shaft one-eighth of an inch per inch in length, and drawing the flywheel up on its seat by means of a nut.

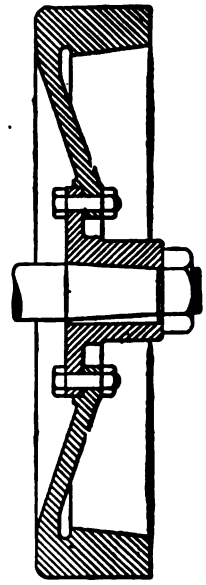

FIG. 254. — CAST IRON FLYWHEEL WITH STEEL HUB.

Fan Wheels—A few manufacturers, following a practice first introduced by the Daimler Motor Company, of Germany, cast their flywheels with fan shaped spokes, so that it will aid the radiator fan in creating a draught through the radiator (see Fig. 255). Some makers place the flywheel at the front end of the motor directly back of the radiator and depend entirely upon its fan shaped spokes for producing the radiator draught. Fan flywheels are used in conjunction with both cone and multiple disc or band clutches. The cone clutch is generally about the same diameter as the flywheel rim, and the clutch cone must then be provided with spokes, so the air moved by the flywheel may pass through it. Occasionally the clutch spokes are also made fan shaped, so as to assist the flywheel spokes rather than act as an obstruction to the air moved by them.

If the multiple disc clutch is used, this is generally only of about half the outside diameter of the flywheel rim. The flywheel is then cast with the clutch housing in the centre and fan spokes connecting the outside of the housing with the inside of the rim. The spokes are preferably laid out helix fashion. Consider a median surface through the spoke parallel with its

sides. The line of intersection of this surface with the inner surface of the rim cuts the generatrices of the latter surface at a constant angle. There does not seem to be much uniformity in the design of these spokes, the "angular advance" or "lead" of the helix varying between wide limits. For average sized engines a lead of 40 inches seems to give good results. That is, if the flywheel rim were extended to a great length and the spoke the same, the joint of the spoke with the rim would make a complete revolution in 40 inches measured along the axis of the flywheel. Each point of the intersection of the helix with the inner surface of the rim connects to the axis by a straight

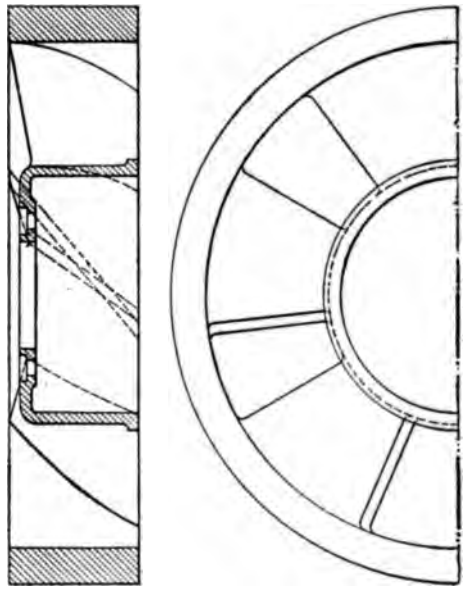

FIG. 255.—FAN FLYWHEEL.

line perpendicular to the axis. These flywheels are generally made with either five or six spokes.

Machining Flywheels—Flywheels can be machined to advantage in a vertical turret lathe. A method of machining a typical form in a Bullard lathe is illustrated in Fig. 256. The flywheel is mounted on the revolving table, first with one face up and then with the other, and with these two settings the wheel is bored out and machined all over. A cast iron flywheel of the type

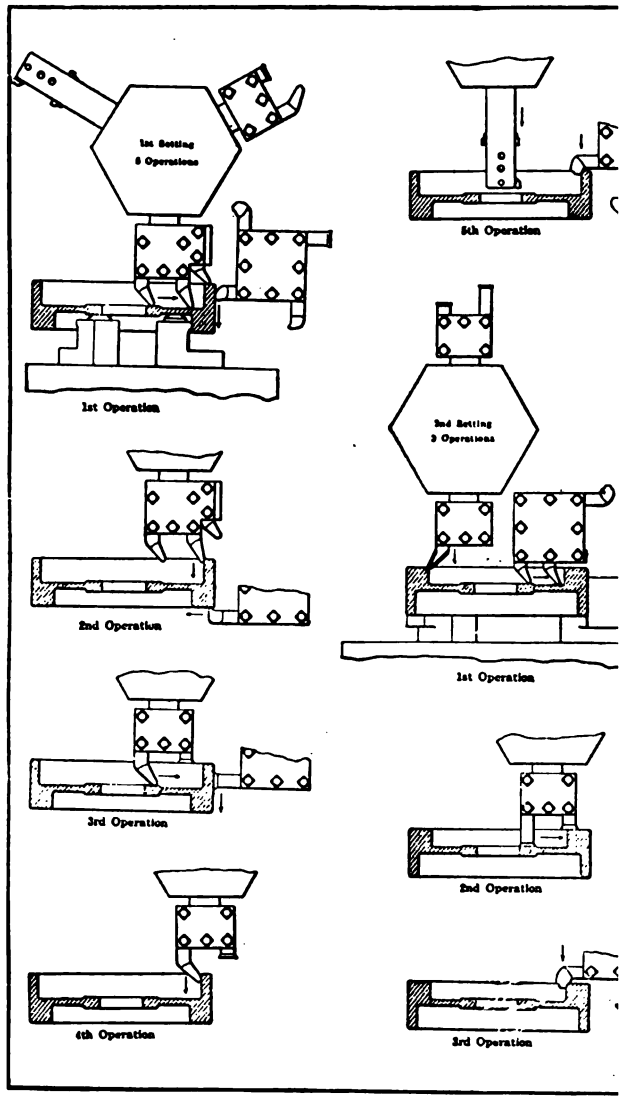

FIG. 256.—MACHINING A FLYWHEEL.

shown, about 18 inches in diameter, can be completely machined in about thirty minutes. The illustration clearly shows each of the successive operations.

Balancing Flywheels—The flywheel is by far the most important rotating part of the motor, and in order that the latter may run smoothly and without undue vibration, the former must be carefully balanced. It is not sufficient that it be in static balance; that is, that it will remain in any position when mounted on a shaft and placed on two balance ways; it must also be in running balance. Of course, if it is machined

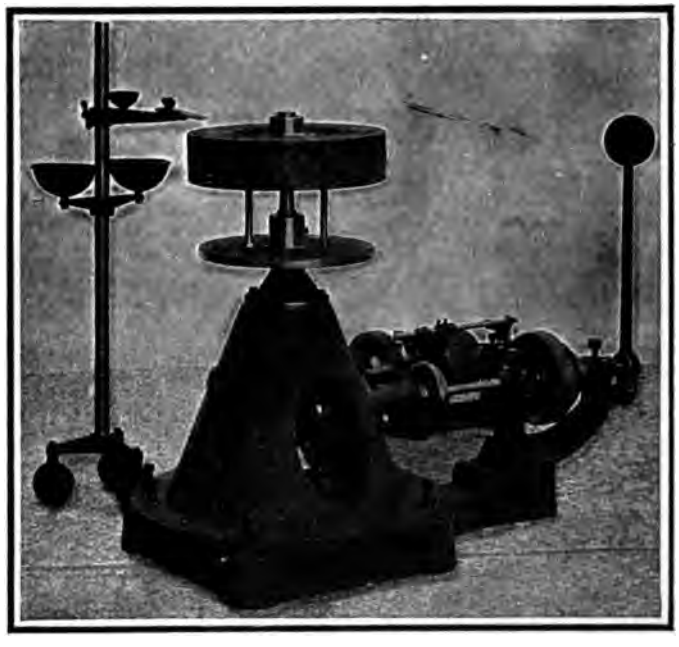

FIG. 257.—DEFIANCE FLYWHEEL BALANCING MACHINE.

all over, and the work is carefully done, it is almost certain to be in true running balance. Not so if the wheel is spoked, for instance, and cannot be finished on and between the spokes. In that case it is necessary to test for running balance, for which purpose the machine shown in Fig. 257 was designed by the Defiance Machine Works, of Defiance, Ohio. It consists of a conical frame in the centre of which is placed a vertical ground

steel spindle standing in a step bearing in the base of the frame and passing up through a long bearing at the top. This spindle at its upper end carries a face plate provided with two driving pins which project upward parallel with the axis of the spindle. A steel centre with tapered shank is fitted into the vertical spindle, the upper end of the centre being reduced to a point upon which the flywheel to be balanced rests.

The vertical spindle is rotated by friction gearing from a horizontal shaft carried in suitable bearings in the base of the machine. The horizontal shaft is in two parts, which are connected by a friction clutch and moved longitudinally by means of a counterweighted lever, so arranged that the weight serves to press the clutches together when it is desired to rotate the vertical spindle, and to disconnect the clutches when it is desired to examine, test and mark the flywheel while running alone, as the driving pins are liable, when pressing against the flywheel, to produce uneven rotation. The true unbalanced condition is best shown when the disturbing influence of the motive power is withdrawn.

The method of using this machine is as follows: First a standing balance is produced by applying a weight to the inside of the rim. Then the flywheel is rotated and the edge of the rim marked with a pencil of moistened chalk. If the mark occurs within one-fourth of the circumference of the wheel from the weight in the direction of rotation the weight is raised and at the same time advanced toward the mark. If the mark occurs at more than one-fourth the circumference from the weight the weight is lowered and placed further back from the mark. If the edge of the wheel is reached in this way and the wheel still runs out a counterweight should be placed diametrically and transversely opposite. The weight should always be so adjusted that the standing balance is not disturbed. Where it is not permissible to attach weights material must be removed from the rim in order to effect a balance, and the reverse process must then be followed, but frequently the use of trial weights facilitates the solution.

CHAPTER XVI.

SPEED CONTROL—THE GOVERNOR.

The speed of an automobile motor is controlled by means of a throttle valve in the gas inlet pipe, which is generally of the butterfly type, but occasionally—especially on foreign cars—of the barrel type. As a rule the throttle forms an integral part of the carburetor, and its design, therefore, need not be discussed here. The throttle valve is connected to a finger lever located on top of the steering wheel or underneath it on the steering column, and frequently also to an accelerator pedal, so that the driver can vary the gas supply to the motor at will, and hence control its speed. One method of arranging the connections between the throttle arm and the throttle lever and accelerator pedal respectively, is as follows: To the throttle arm is connected a spring which always tends to close the throttle. The throttle lever connects to the throttle arm by means of a rod having a sliding joint, so that the throttle can be opened beyond the position for which the throttle lever is set without disturbing the setting of that lever. The accelerator pedal is held in the closed position by means of a spring and connects to the throttle arm by means of a rod in such a way that the arm can move through a certain range without moving the rod. This is accomplished by passing the rod through an opening in the throttle arm and providing it with stops on both sides of the throttle arm but at some distance therefrom, and interposing a spring between the throttle arm and one of the stops.

Whenever the load on the motor is decreased the motor has a tendency to speed up. This tendency to "race" is especially strong when the clutch is withdrawn and, therefore, all load removed. In order to prevent the motor from unduly speeding up under these conditions the throttle must always be closed immediately. It is a well known fact that careless drivers will disregard this rule, thereby injuring the motor. For this reason the motors on those types of cars which, as a rule, are not driven

by the owners themselves, are frequently fitted with governors which keep the speed of the motor within certain limits. At present the great majority of truck motors, and also the motors on some of the highest grade pleasure cars, are fitted with governors.

There are two general types of governors in use on automobile motors, viz., the centrifugal type and the hydraulic type. We will discuss these two types in succession. Whichever type is used, it is connected to the throttle valve in such a manner that as soon as the speed for which it is set is exceeded, it closes the throttle valve more or less, so as to keep the speed within the predetermined limit. In addition to the automatic control of the engine, some form of hand or foot control is sometimes provided. The governor works against a spring, and the hand or foot control mechanism is so arranged that it varies the position of the spring rest, in which case the governor will hold the engine at any speed the operator may desire.

Centrifugal Governors—The centrifugal governor, in the form in which it is most frequently used, consists of two weights carried upon one of the revolving parts of the motor, generally the camshaft. The weights are carried by bell cranks which are pivoted on brackets rotating with the shaft and generally either formed integral with or fixed to the camshaft gear. The free arms of the bell cranks engage with a grooved sliding sleeve on the camshaft. This sliding sleeve is provided with a second groove into which engages the end of a lever or bell crank whose other end connects to the arm of the throttle valve. The revolving weights are being drawn or forced together by means of a spring or springs which may either extend between them or surround the shaft and exert their pressure against a stop collar and the sliding sleeve respectively. Fig. 258 shows a centrifugal governor in diagram. We found that the centrifugal force on rotating bodies is

$$F_c = \frac{w\,n^2\,r}{35{,}240}.$$

In the case of the governor this force is balanced by the spring force in any position of equilibrium. The law of the coiled extension spring is that its pull is proportional to the extension. Let a be the length of the spring with its connections in the free state. Then $2r - a$ is the extension, and the spring force is

$$F_s = c\,(2r - a).$$

Hence

$$\frac{w\,n^2\,r}{35{,}240} = c\,(2r - a)$$

$$35{,}240\,c\,a = (70{,}480\,c - w\,n^2)\,r$$

$$r = \frac{35{,}240\,c\,a}{70{,}480\,c - w\,n^2} \quad \ldots\ldots\ldots\ldots\ldots\ldots\ldots\ldots\ldots\ldots (87)$$

In the above w is taken as the weight of one of the governor weights, since the spring tension is equal to the centrifugal force on one of the weights only.

It will at once be seen that r increases with the speed n. The speed at which the governor acts is, therefore, necessarily higher for small throttle openings or light engine loads than for large throttle openings or heavy loads, but the difference between the two speeds need not be very great.

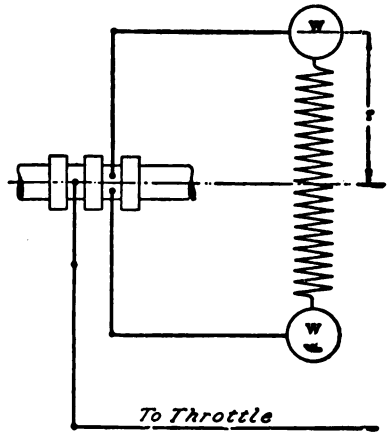

FIG. 258.—DIAGRAM OF CENTRIFUGAL GOVERNOR.

Now let r_1 and r_2 be the smallest and greatest radii of rotation, respectively, of the governor weights and n_1 and n_2 the corresponding speeds of balance. Then, from equation (87),

$$70{,}480\,r_1\,c - w\,n_1^2\,r_1 = 70{,}480\,r_2\,c - w\,n_2^2\,r_2$$

$$70{,}480\,(r_2 - r_1)\,c = w\,(n_2^2\,r_2 - n_1^2\,r_1)$$

$$c = \frac{w\,(n_2^2\,r_2 - n_1^2\,r_1)}{70{,}480\,(r_2 - r_1)} \textit{ pounds per inch} \ldots\ldots\ldots\ldots\ldots\ldots (88)$$

also

$$r_1 = \frac{35{,}240\,c\,a}{70{,}480\,c - w\,n_1^2}$$

$$70{,}480\,c\,r_1 - w\,n_1^2\,r_1 = 35{,}240\,c\,a$$

$$a = \frac{70{,}480\,c\,r_1 - w\,n_1^2\,r_1}{35{,}240\,c} =$$

$$2\,r_1 - \frac{w\,n_1^2\,r_1}{35{,}240\,c} =$$

$$2\,r_1 - \frac{w\,n_1^2\,r_1}{\dfrac{35{,}240\,w\,(n_2^2\,r_2 - n_1^2\,r_1)}{70{,}480\,(r_2 - r_1)}} =$$

$$2\,r_1 - \frac{2\,n_1^2\,r_1\,(r^2 - r_1)}{n_2^2\,r_2 - n_1^2\,r_1} \quad \ldots\ldots\ldots\ldots\ldots\ldots\ldots\ldots\ldots\ldots (89$$

In the above, c represents the tension or force required to extend the spring 1 inch in length and a the length of the spring in the free state, inclusive of the hooks or connections to the centres of the weights. Now let it be desired that the governor act at 1,000 r. p. m. of the motor or 500 r. p. m. of the camshaft when the throttle is fully open, and at 1,200 r. p. m. of the motor or 600 r. p. m. of the camshaft when the throttle is near the minimum opening position. The limiting radii of rotation of the governor weights may be assumed to be 1.5 and 2 inches respectively, and the weight w of each governor ball 1 pound. Substituting in equation (88)

$$c = \frac{1\,(600^2 \times 2 - 500^2 \times 1.5)}{70{,}480\,(2 - 1.5)} = 9.8 \textit{ pounds per inch},$$

and in equation (89)—

$$a = 2 \times 1.5 - \frac{2 \times 500^2 \times 1.5\,(2-1.5)}{600^2 \times 2 - 500^2 \times 1.5} = 1.92 \textit{ inches}.$$

The combined length of the connections from the ends of the spring proper to the centre of the weights can be kept within 0.42 inch, in which case the length of the spring in its free state should be 1.5 inches. If there are to be two springs, one at either side of the weights, then the force required to extend either of them a distance of 1 inch should be

$$\frac{9.8}{2} = 4.9 \textit{ pounds}.$$

The problem then consists in designing a helical spring which in its free state measures 1.5 inches in length, which will extend at the rate of 1 inch per 4.9 pounds applied to its ends and which will not be overstrained by extending it to

$$4 - 0.42 = 3.58 \textit{ inches}.$$

This can be done by means of the rules for the design of coiled springs which were given in the chapter on Valves and Valve Gears. If the springs turn out to be of unsuitable size, the assumptions regarding the range of motion of the governor

weights or the speed range through which the governor acts can be varied and the calculation made over again.

Hunting—Suppose the governor weights to occupy a certain position intermediate between the two limiting positions, and to be held in equilibrium by the centifugal force acting outwardly and the tension of the springs acting inwardly. Now, let the speed of the engine be gradually increased. This, of course, will increase the centrifugal force, and there is then a tendency for the weights to fly out from the axis of rotation. However, there will be no actual outward motion until the excess of centrifugal force over the spring force is sufficient to overcome the static friction of the throttle and of the linkage between it and the governor weights. Hence the motor will gain some speed before the governor begins to act. The moment the speed becomes great enough for the centrifugal force to overcome both the spring tension and the frictional resistance, the governor weights fly out and the throttle begins to close. Now, as soon as the throttle and its linkage begin to move, their resistance to motion is somewhat reduced, according to the well known law that the friction of rest is greater than the friction of motion. The result is that the throttle will be closed further than it really should in order to keep the speed of the motor constant. The motor will thereby be throttled down in speed, and the throttle in turn will be opened wide by the governor. In this way the throttle may be opened and closed by the governor and the motor in consequence speed up and slow down periodically, a phenomenon known as "hunting." Hunting is particularly likely to occur when starting the motor, when its joints are stiff. It can be reduced to a minimum by careful fitting so that the friction at the bearings of the throttle shaft and at the joints in the linkage is very small, and by carefully balancing the throttle valve.

Types of Centrifugal Governors—The typical form of shaft governor as used on automobile motors is illustrated in Fig. 259 Two bell cranks *AA* carrying the governor weights *BB* are pivoted to brackets extending from the web of the cam gear. The governor weights are connected by helical springs *CC* secured to them by hooks at opposite ends. The inwardly extending arms of the bell cranks engage into a groove on the sliding sleeve *D* on the camshaft *E*. Into a second groove on this sliding sleeve engages the end of a lever arm *F* whose shaft extends through and has a bearing in the wall of the cam gear housing. This shaft at its end outside the housing carries a long lever *G*

from which connection is made to the throttle arm. The lengths of lever *G* and the throttle arm are so proportioned that the range of throttle motion corresponds to the range of the governor. In

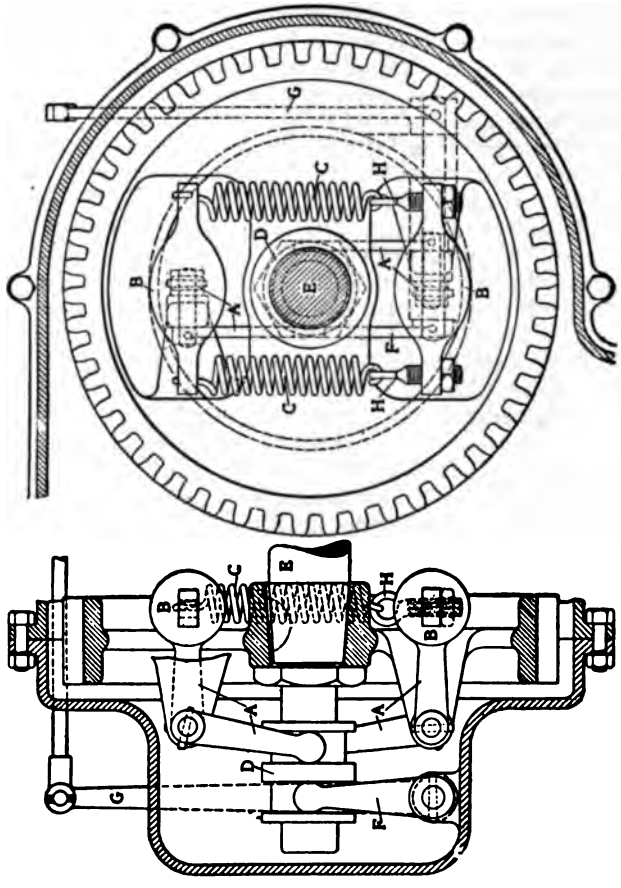

FIG. 259.—CENTRIFUGAL GOVERNOR.

the illustration provisions for adjusting the tension of the governor springs *CC* are shown, in the shape of hook screws *HH*, which screw through the projecting ends of the governor weights

BB and are locked in place by means of check nuts. However, such adjusting means are hardly required and are seldom provided. This governor is enclosed with the cam gears and requires no special housing.

Fig. 260 shows a vertical shaft governor as fitted to the Adler truck motor. The shaft may be extended at the top and bottom to drive such accessories as the timer and the oil pump, if desired. The governor comprises two pivoted weights *AA* devel-

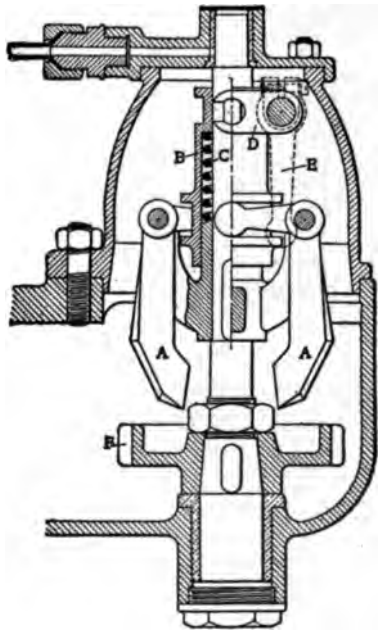

FIG. 260.—VERTICAL TYPE GOVERNOR.

oped in the form of a bell crank, whose operating arms engage with a grooved sleeve *B*. The counter spring *C* is located between this sleeve and the shaft. The sliding sleeve *B* is also in working connection with the lever *D*. The shaft of this lever extends through the wall of the housing and outside the housing carries a lever arm *E* from which connection is made to the throttle valve. The governor shaft receives its motion from the camshaft through a pair of helical gears, the driven one of

which is shown at *F*. Lubrication of the governor is provided for by a direct oil feed to the top bearing.

The governor shown in Fig. 261 was used by the Cadillac Motor Car Company on touring car motors some years ago, and is an adaptation from marine steam engine practice. The centrifugal member consists of a metal ring *A* which is pivoted to the double armed bracket *B* secured to the vertical shaft *C*

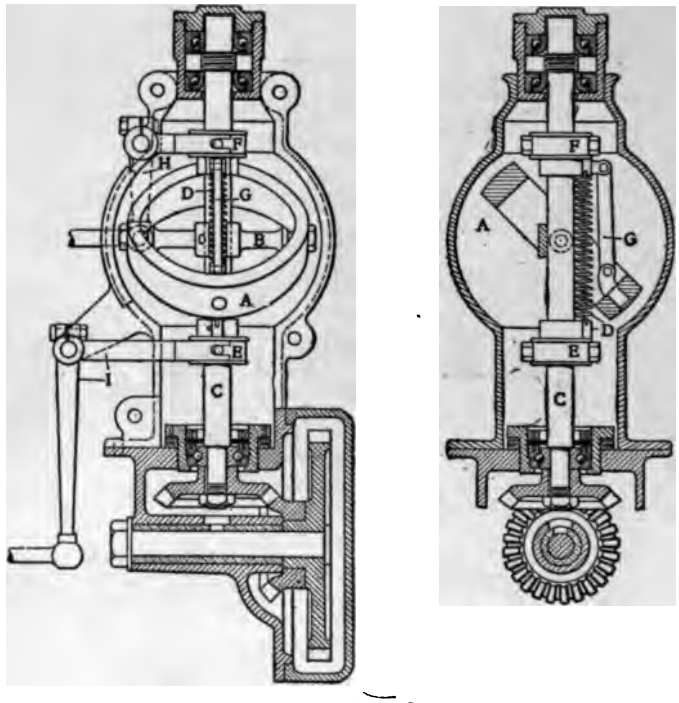

FIG. 261.—RING TYPE GOVERNOR.

which is driven through bevel gears from the camshaft. When the engine is at rest, the ring *A* is held in an inclined position relative to shaft *C* by means of the spring *D* extending between the two sliding sleves *E* and *F* on the shaft *C*. The sliding sleeve *F* is connected to the ring *A* through a link *G*. The sliding sleeve *F* connects through the bell crank *H* to the throttle valve, and the sliding sleeve *E* connects through the bell crank *I* with the throttle lever on the steering wheel. The anchorage

of the governor spring *D* can thus be moved by the operator at will. The sleeve *F* is moved along shaft *C* by revolving ring *A* according to the speed of shaft *C*, thus opening or closing the throttle. This forms, therefore, a combined manual and automatic engine control.

Hydraulic Governors—A number of manufacturers, including Panhard & Levassor in France and the Packard Motor Car Company in this country, have used so-called hydraulic governors for governing the speed of their motors. In these the pressure of the pump circulated cooling water is made use of to close the throttle when the speed exceeds certain limits. A sketch of such a governor is shown in Fig. 262. The device consists

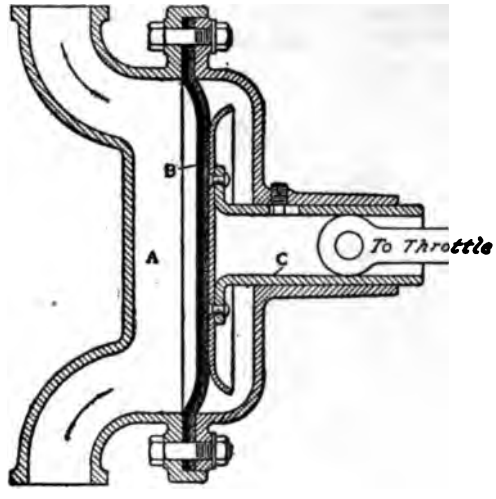

FIG. 262.—HYDRAULIC GOVERNOR.

merely of a diaphragm chamber *A* in which there is a diaphragm *B* acting against the plunger *C* from which connection is made to the throttle arm. The cooling water as it comes from the pump may be led through the diaphragm chamber, or this chamber may simply be connected by a pipe to the cooling system at a point near the pump outlet. The pressure of the circulating water increases with the speed of the pump, and hence, with the speed of the motor, the relation between the pressure and pump speed depending upon the type of pump employed. The throttle can be held open by means of a spring.

Gas Inertia Type Governor.—Another type of engine governor, represented by a patented design known as the Kramer, is based on the principle of gas inertia. This governor comprises the throttle valve and the governor proper in a housing which is inserted between the carburetor and the intake manifold. The upper part of the governor housing is of truncated conical form and in it is located a disc adapted to slide on a central vertical stud. The disc is connected to the balanced throttle valve below it by means of a linkage in such a manner that when the disc is lifted the throttle closes. Ordinarily the disc is held in the position corresponding to open throttle by a spring. When a certain speed is attained by the engine the force of the stream of gas impinging upon the disc overcomes the force of the spring, the disc is raised and the throttle is partly closed, thus reducing the speed of the engine.

CHAPTER XVII.

POWER OUTPUT AND OTHER CHARACTERISTICS.

Many efforts have been made to develop a simple formula giving the maximum power output of gasoline engines, but these attempts have been more or less futile, owing to the very large number of factors which affect this output. The elements of design which determine the maximum output may be enumerated as follows:

Number of cylinders.
Bore.
Stroke.
Compression ratio.
Form of compression chamber.
Valve timing.
Valve port opening.
Cross section, length and relative straightness of gas passages.
Cooling facilities.
Weight of reciprocating parts.
Location of ignition points.

Besides the above, the fit and alignment of the bearings, their relative diameters and lengths, the bearing metals and the amount and grade of lubricant used upon them affect the output at the crankshaft. It would evidently be impossible to embody all of these factors in a power output formula, and for this reason all except the number of cylinders and the bore and stroke are generally neglected.

Horse Power Formulae—If we call the mean gas pressure per square inch of piston head area during the power stroke, reduced by the mean pressure during the compression stroke, p, and if the cylinder has a bore b and the length of stroke is l, then the work done in one cylinder during one cycle is evidently

$$\frac{\pi b^2 \, p \, l}{4 \times 12} \textit{ foot pounds.}$$

If the motor runs at n revolutions per minute, then there will be $\frac{n}{2}$ explosions in each cylinder per minute, and the power developed by each cylinder will be

$$\frac{\pi n b^2 p l}{2 \times 4 \times 12 \times 33{,}000} H.P.$$

Also, if there are N cylinders, then the power of the motor will be

$$H.P. = \frac{\pi N n b^2 p l}{3{,}168{,}000}$$

This is the indicated power—the power conveyed by the expanding gases to the moving pistons. Of this power a certain percentage is lost in piston and bearing friction, valve operation, windage, etc. Representing the mechanical efficiency of the motor by η, we have for the brake horse power

$$B.H.P. = \frac{N n \pi b^2 l \eta p}{3{,}168{,}000}$$

The linear speed of the piston is

$$s = \frac{2 n l}{12} = \frac{n l}{6} \textit{ feet per minute.}$$

Substituting this value in the above expression for the brake horse power and incorporating the value of π in the constant we have

$$B.H.P. = \frac{N s \ b^2 \eta}{168{,}000} p \qquad (90)$$

Of these factors N and b are known in advance, but s, the piston speed at which the motor develops its maximum power, and ηp, the brake mean effective pressure, are not known. If we desire a formula for the horse power involving only the bore and stroke, then the question arises whether the piston speed of maximum output and the mean effective pressure vary with the bore and stroke, and if so, in what proportion.

European Data and Deductions—A very thorough investigation of these questions has been made by a committee of the Institution of Automobile Engineers (Great Britain). As regards the mean effective pressure, it would be expected that this would increase with the bore, for the reason that in a large bore motor there is less cooling surface to the combustion chamber per unit of charge contained, hence less heat will be lost through the cylinder walls. This view is undoubtedly correct in so far as motors designed with the same compression ratio are concerned, and some experimental data is cited by the committee to support this point. On the other

hand, the very fact that there is a relatively larger wall surface in a small bore motor, and hence more rapid cooling of the charge, permits of using a higher compression ratio. A higher compression ratio would make up for the lesser area of cooling surface, so that the mean effective pressure would be substantially the same in all sizes of cylinders. This is borne out by a diagram in which the mean effective pressures of eighty-eight motors are plotted against the cylinder bores, which accompanied the report of the committee. This diagram showed absolutely no variation of the mean effective pressure with the bore. Of 124 motors regarding which data were collected by the committee, 5.6 per cent. showed a mean effective pressure above 90 pounds per square inch; 15.3 per cent. between 80 and 90 pounds, 28.2 per cent. between 70 and 80 pounds, and 21.2 per cent. between 65 and 70 pounds. About 50 per cent. of the engines thus showed mean pressures over 70 pounds per square inch. The highest pressure found was 95½ pounds.

The committee, however, was guided by other considerations than these data. Experiments by one English engine manufacturer (White & Poppe) had shown an increase in the mean effective pressure from 80.6 pounds for a bore of 3.15 inches to 102 pounds for a bore of 5 inches, and the experience of individual committee members was that the mean effective pressure increased with the bore "under similar conditions of compression." It therefore decided to accept 68.5 pounds per square inch for $\eta\ p$ when the bore is 2½ inches and 99.5 pounds when $b = 5$ inches. The value of the mean pressure for any other bore may then be found from the equation

$$\eta\ p = 130 \left(1 - \frac{1.18}{b}\right) \textit{pounds per square inch} \qquad (91)$$

The piston speed corresponding to the maximum output was determined for 101 engines, and it was found that it varied with the ratio r of stroke to bore, as shown in the following table:

No. of Tests.	r.	Piston Speed at Max. H. P. (Ft. P. M.).
15	1.00—1.08	1303
30	1.10—1.20	1240
24	1.21—1.30	1385
25	1.33—1.44	1414
7	1.50—1.61	1595

The committee found that the piston speed corresponding

to the maximum horse power may be represented by the equation:

$s = 600\ (r + 1)$ *feet per minute* .....(92)

This gives a piston speed of 1,200 feet per minute when $r = 1$, and 1,800 feet per minute when $r = 2$.

If now we substitute the values of $\eta\ p$ and s just found in equation (90) we get

$B.\ H.\ P. = 0.464\ N\ b\ (b - 1.18)\ (l + b)$ ..... (93)

Substituting for r its value $\frac{l}{b}$ we have

$$B.\ P.\ P. = 0\ 464\ (b - 1.18)\ (l + b)$$

The committee, however, recommends to use the coefficient 0.45 instead of 0.464, for the sake of simplicity, and its proposed formula is

$B.\ H.\ P. = 0.45\ (b - 1.18)\ (l + b)$ .....(94)

This formula is intended to give the horse power which can safely be obtained from an engine of given cylinder dimensions under the most favorable conditions, and Dugald Clerk in a note on the report of the committee said that, in order to obtain the power usually developed by a motor on the road, the results of the formula should be multiplied by 0.6.

A. L. A. M. Rating Formula—In this country and England a rating formula known here as the A. L. A. M. and abroad as the Royal Automobile Club formula, has long been used. It is as follows:

$B.\ H.\ P. = \frac{N\ b^2}{2.5}$ .....(95)

at 1,000 feet piston speed per minute.

When this formula was first adopted, about 1905, most up-to-date motors gave their maximum output at about 1,000 feet piston speed per minute. This piston speed is now greatly exceeded in all pleasure car engines, and especially in engines built for racing, but in truck engines it remains substantially the same. From equations (90) and (95) we have

$$\frac{N\ b^2}{2.5} = \frac{1000\ N\ b^2\ \eta\ p}{168{,}000},$$

from which it follows that

$$\eta\ p = 67.2 \text{ pounds per square inch.}$$

which is the assumption on which the A. L. A. M. rating formula is based. The two formulæ above discussed give widely different values when applied to motors of large bore and long stroke, but it must always be remembered that the

first is intended to give the maximum power the motor can possibly deliver, whereas the second is designed to give the power at 1,000 feet piston speed per minute, which can now be exceeded by most motors, and greatly by motors of unusually long stroke.

In 1912 the Technical Committee of the Automobile Club of France, in a report to the French Government, recommended horse power formulæ based on the following brake mean effective pressures: Touring car motors running at not over 1,000 ft. p. m. piston speed, 75.2 lbs. p. sq. in.; high speed touring motors, 78.1 lbs.; truck motors, 82.4 lbs.

In Fig. 263 are shown the brake mean effective pressures plotted against the piston speed for seventeen different engines mostly of 1915 model. The Knight motors show a maximum value of η.p. of 97 lbs. and a value of η.p. for the speed of maximum output (mean, 1,700 ft. p.m.) of 76.5 lbs. The valve in head motors show an average maximum value of η.p. of about 85 lbs. and an average value of η.p. for the speed of maximum output (mean value, 1,600 ft. p.m.) of 73.5 lbs. The L and T head motors show an average maximum value of η.p. of about 85 lbs. and an average value of η.p. for the speed of maximum output (1,636 ft. p.m.) of 70.5 lbs. All of the motors represented in the chart are pleasure car motors. There is a strong tendency toward increased piston speeds in these motors, and many of the newer designs run at over 2,000 ft. p.m. when giving their maximum output. Truck motors, on the other hand, still run at 1,000-1,200 ft. p.m., and a sharp contrast is therefore developing between the two types. The curves in Fig. 263 are from the following motors: 1—Buick, six-cylinder, 3¼ x 4½; 2—Ferro, eight-cylinder, 3 x 3½; 3—Northway, four-cylinder, 3½ x 5; 4—Ferr, eight-cylinder, 3¼ x 4; 5—Chalmers, six-cylinder, 3⅛ x 5; 6—Continental, six-cylinder, 3½ x 5; 8—Willys-Knight, four-cylinder, 4⅛ x 4½; 9—Moline-Knight, four-cylinder, 4 x 6; 10—Herman, eight-cylinder, 2½ x 4; 11—Cadillac, eight-cylinder, 3⅛ x 5½; 12—Buda, four-cylinder, 3½ x 5⅛; 13—Four-cylinder, 3¾ x 5½; 14—Locomobile, six-cylinder, 4½ x 5½; 15—Locomobile, six-cylinder, 4¼ x 5; 16—Wisconsin, six-cylinder, 5.1 x 5½; 17—Beaver, four-cylinder, 3½ x 5; 18—Hudson, six-cylinder, 3½ x 5.

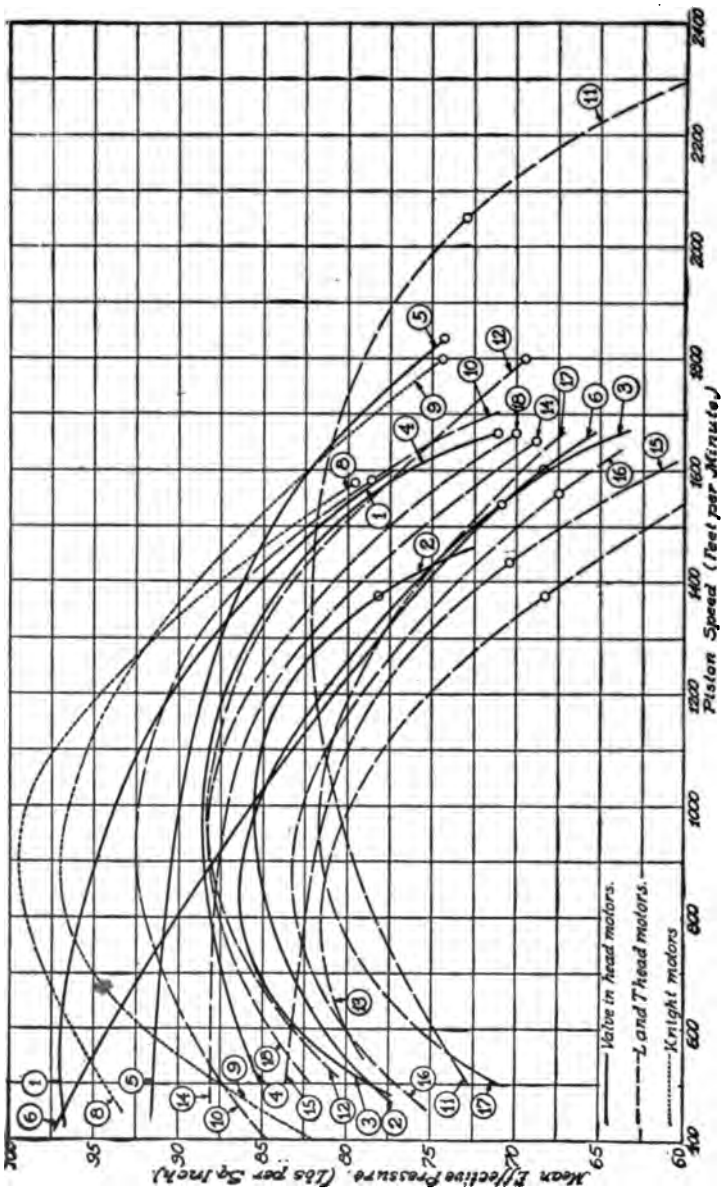
Mean Effective Pressure. (Lbs per Sq Inch)
Piston Speed (Feet per Minute)
Valve in head motors.
L and T head motors.
Knight motors

Of the motors represented in the Figure only the Cadillac is a high-speed motor as the term is generally understood at present. It was the pioneer of this type in America but in 1915 at least half a dozen American stock motors were developed, giving their maximum output at between 2,000 and 2,500 feet per minute. In racing motors the piston speed corresponding to maximum output has been advanced even further, to about 3,000 feet per minute. Thus the Wisconsin 1915 racing engine, having four 3¾ x 6¾-inch cylinders developed its maximum output at over 3,000 revolutions per minute. A high-speed motor has been defined as one in which the combined inertia and centrifugal force loads on the crank pins exceed the gas pressure load.

Ratio of Bore to Stroke—The first motors built for automobiles for the most part had a comparatively long stroke, 50 per cent. or more longer than the cylinder bore, automobile engine designers in this respect following the practice of stationary gas engine designers. Then came the era of the short stroke, high rotary speed engine, inaugurated by Bouton and Buchet in France. The short stroke motors of these engineers certainly weighed considerably less, horse power for horse power, than any previously produced, and so their examples soon found many followers. Since that time, about 1900, whenever it was desired to produce an engine of high weight efficiency, the stroke was made less or equal to the bore. For a time the opinion prevailed that the power output did not depend upon the bore at all; that a 4x4 inch motor, for instance, would develop as much power as a 4x6 inch motor, by giving its maximum output at a rotative speed 50 per cent. higher, while, on the other hand, the power increased as the square of the bore or faster. However, this idea was exploded by the results of the so-called 4 inch or 100 mm. races in Europe several years ago. In these races the cylinder bore was limited to 4 inches, and in every case the greatest speeds were developed by cars with long stroke motors, thus showing conclusively that the long stroke motors developed greater power than the short stroke ones. It may here be added that Charles Faroux, a French technical automobile writer, found that the output of a motor varies as the 0.6 power of the length of stroke, and the German Automobile Technical Association adopted a formula according to which it varies as the 0.7 power of the stroke.

Effect of Length of Stroke on Thermal Efficiency—It having thus been shown that a long stroke motor will develop

greater maximum power and at a higher piston speed than a short stroke motor, it remains to show the reasons therefor. One of these is that the long stroke increases the thermal efficiency. Consider two motors of equal piston displacement, of 3-inch bore by 6-inch stroke and 3.78-inch bore and stroke respectively. Let the compression ratio in each be 4:1. Then, considering the compression chamber as an extension of the cylinder, its wall area will be

$$\frac{2 \times 3.78 \times 3.78 \times 3.14}{4} + 3.78 \times 3.14 \times 1.26 = 37.4 \textit{ square inches}$$

in the case of the short stroke motor, and

$$\frac{2 \times 3 \times 3 \times 3.14}{4} + 3 \times 3.14 \times 2 = 32.97 \textit{ square inches.}$$

in the case of the long stroke motor. The wall area of the combustion chamber in the long stroke motor is, therefore, about 12 per cent. smaller than that of the combustion chamber of the short stroke motor of equal cylinder capacity. The advantage is on the side of the long stroke motor for half of the stroke, though it is greatest near the beginning of the stroke when the temperature difference on opposite sides of the cylinder wall, and hence the heat loss, is the greatest.

Effect on Volumetric Efficiency—Another reason is the smaller effect of inertia on the incoming charge in the long stroke motor. The speed at which charge flows into the cylinder under a given suction force depends partly upon the resistance to gaseous flow of the inlet passage and partly upon the inertia of the gas column filling this passage. Now, consider again the two motors mentioned above. If the piston speed were the same in each the suction stroke would be of twice the duration in the long stroke as in the short stroke motor, and the maximum and mean gas speeds through the inlet passage would be the same in both motors, on the supposition that the volumetric efficiency is the same in both. But in the long stroke motor the gas would have twice the length of time for attaining its maximum speed, and it would, therefore, be hampered much less by inertia. The result is that, since the inertia effect on the incoming charge is less, the long stroke cylinder will fill better than the short stroke cylinder, at any given piston speed. The same volumetric efficiency may therefore be obtained in the long stroke motor at a higher piston speed, and it is well known that decrease in volumetric efficiency is the chief factor limiting the working speed of gasoline motors. This is probably the most impor-

tant reason why the long stroke motor runs at higher piston speed and develops greater power than the short stroke motor.

A third reason is to be found in the reduced inertia effects on the reciprocating parts in the long stroke motor. We found (equation 24) that the inertia force is equal to

$$F_a = 0.0000142\, W l N^2 \left(\cos\theta + \frac{1}{2n}\cos 2\theta\right) \textit{pounds}.$$

The crank angle factor in the above equation will be independent of the length of stroke if the ratio n of connecting rod length to length of stroke remains the same. Assuming the same weight of reciprocating parts in motors whose strokes are l and $2l$ respectively, the inertia effects on the parts will be the same if

$$l n_1^2 = 2 l n_2^2,$$

from which it follows that

$$n_2 = \sqrt{\frac{1}{2}}\; n_1 = 0.707\, n_1$$

Since the stroke is twice as long and the angular speed 0.707 times as great, the piston speed in the long stroke motor will be 1.414 times as great. However, the weight of the reciprocating parts will be somewhat greater in the case of the long stroke motor, but not as much as 41 per cent.

Length of Stroke and Weight Efficiency—There can be no doubt that a long stroke motor is heavier than a short stroke motor of the same horse power output, all other things being equal. The three heaviest parts of any motor are the cylinders, the crank case and the flywheel. The weight of the cylinder varies almost as fast as the length of stroke, that of the crank case varies faster than the length of stroke, and the flywheel weight, for the same coefficient of irregularity, varies as the square of the length of stroke (equation 81). Hence the total weight of the motor varies probably as fast as the length of the stroke, while, according to authorities cited, page 409, the output varies only as the 0.6 and 0.7 power of the stroke, respectively. It is very difficult to make an exact comparison, because of the many parts involved, and no practical data on the subject are available, because cases of engines of different stroke-bore ratios designed along otherwise identical lines are very rare. Designers, however, show their belief in this principle by using short stroke motors wherever high weight efficiency is paramount, as in aeronautic motors. The great majority of modern aeronautic motors have a stroke-bore ratio of one or slightly over, while in recent automobile engine practice abroad the ratio is much higher, especially in small bore motors.

Service for Which Motor Is Intended Should Govern Ratio.—The present tendency is to give motors of small horse

power output intended for town cars, taxicabs, etc., a stroke relatively long as compared with the bore, and more powerful motors for touring cars a stroke not so long in relation to the bore. There are two reasons for this practice. The first is that in a low powered car intended for slow speeds the problem of the gear reduction to the rear axle becomes easier if the motor turns at a relatively low angular speed—that is, if it is a long stroke motor—while in the case of a fast touring car no difficulty is experienced in getting the necessary reduction ratio. Take, for instance, the case of a town car with 32 inch wheels, to be driven at 25 miles per hour at the maximum output of the motor. At the above speed the road wheels will rotate at 265 revolutions per minute. Now, suppose the motor to have a stroke of 4 inches. At a piston speed of 1,000 feet per minute it would turn at 1,500 revolutions per minute and the required reduction ration would be

$$\frac{1,500}{265} = 5.66.$$

It is difficult to obtain this ratio and still have a pinion with an adequate number of teeth of the proper pitch and sufficient clearance under the rear axle housing. It is therefore better to increase the length of stroke and decrease the speed of revolution of the motor, thereby decreasing the required reduction ratio.

If, on the other hand, we take a touring car with 36 inch wheels to be geared to 45 miles per hour at 1,000 feet piston speed of the motor, the speed of the rear axle will be 420 revolutions per minute. Then, for a reduction ratio of 3 we would get a length of stroke of about 5¾ inches. Among the more recent motors for pleasure cars the stroke is seldom less than 5 inches, although the bore is sometimes as small as 3 inches. A diagram prepared by the Horse Power Formula Committee of the Institution of Automobile Engineers, in which the stroke-bore ratios of a large number of motors are plotted against the bores, shows that the average ratio decreases from about 1.75 for 2.5 inch bore to nearly 1 for 5 inch bore.

Dependence of Flexibility on Length of Stroke—There is a general impression that the long stroke motor is more flexible than a short stroke motor. By this is meant that the ratio of the "maximum load" speed to the minimum speed under full throttle is greater in the case of the long stroke than in that of the short stroke motor.

We have already shown that the long stroke motor will give its maximum output at a higher piston speed and if it can be

shown that it will run regularly at an equal or lower minimum piston speed under full throttle as the short stroke motor the point will have been proved. This is obviously largely a matter of flywheel capacity, but it depends also to some extent upon the valve setting. In a short stroke motor the inlet valves must have a large lag and the exhaust valves a great lead, in order that the motor may develop its maximum power at a relatively high piston speed. But this setting of the valves interferes with the operation of the motor at low piston speed under full throttle. In a long stroke motor less lag and lead are required in the valve action, and if such a motor is provided with a sufficiently heavy flywheel it may well be able to run at a lower piston speed under full throttle than a short stroke motor. However, both the speed of maximum output and the minimum speed under full throttle are dependent upon several interrelated factors, so that it is difficult to determine the direct effect of any one factor upon the flexibility.

It may here be well to correct an erroneous impression often met with—that the hot gases are expanded farther in a long stroke than in a short stroke motor, and that in consequence the working efficiency is increased, the same as by increasing the ratio of expansion in a steam engine. This view is absolutely incorrect, since the ratio of expansion is the same as the compression ratio and is not at all affected by the length of stroke or by the stroke-bore ratio.

Characteristic Curves—In addition to the maximum power that can be obtained from a motor, the horse power outputs at various angular speeds and the corresponding torques are of interest to the engineer. These values are preferably plotted on co-ordinate diagrams with the speeds of revolution as abscissas and the horse powers and the torques in pounds-feet as ordinates. A fuel consumption curve is frequently plotted on the same diagram.

A set of such characteristic curves is shown in Fig. 264. These were taken from a six cylinder Alco motor manufactured by the American Locomotive Co., Providence, R. I., of 4¾ inches bore by 5½ inches stroke. The motor is of T-head type, with a compression volume to total volume ratio of 21.2 per cent. It has high tension magneto ignition, with spark plugs set over the inlet valves. It will be seen that the minimum speed at which observations were taken was 450 revolutions per minute. The torque increased slightly to 750 revolutions per minute, and then decreased, at first slowly, and then more rapidly. The maximum output of 64.5 horse power is obtained at 1,360 revo-

lutions per minute. This corresponds to a mean effective pressure p of 64.2 pounds per square inch and a piston speed of 1,247 feet per minute. The specific fuel consumption is also shown on the diagram. It will be seen that this is a minimum at about 900 revolutions per minute, viz., 0.76 pound per brake horse power-hour. The torque is a maximum at 750 revolutions per minute, and the mean effective pressure is then 81.6 pounds per square inch.

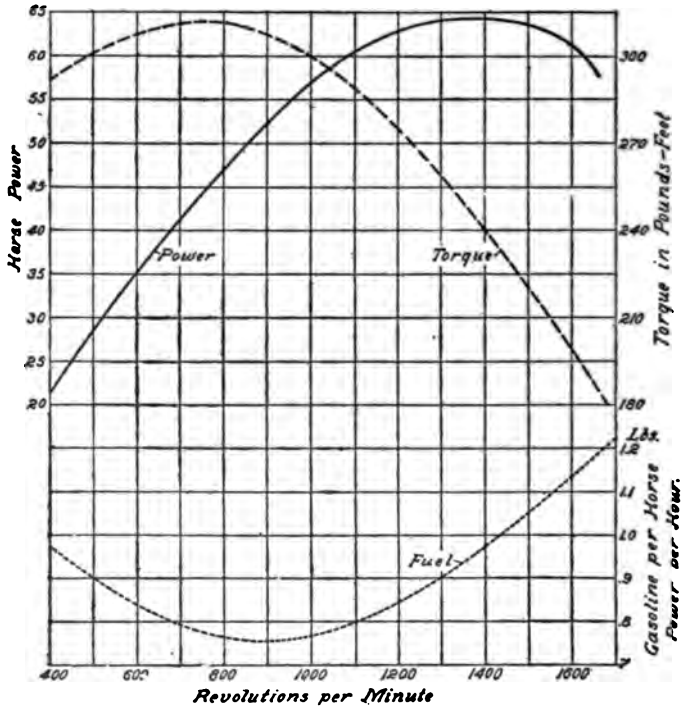

FIG. 264.—CHARACTERISTIC CURVES OF ALCO SIX CYLINDER, 4¾x5½ INCH MOTOR.

Another set of characteristic curves are shown in Fig. 265. These are of a White four cylinder 1913 model motor, and the tests were made at the laboratory of Joseph Tracy, Rutherford, N. J. The motor had a bore of 3¾ inches and a stroke of 5⅛ inches. All valves are located on one side, and the motor is of the en bloc type. Ignition is by magneto. It will be seen that

this motor delivers its maximum output of slightly over 33 horse power at 1,600 revolutions per minute, corresponding to a piston speed of 1,366 feet per minute. The brake mean effective pressure at the point of maximum torque (about 1,000 revolutions per minute) figures out to 86 pounds per square inch, and at the point of maximum output (1,600 revolutions per minute) to 71 pounds per square inch. The fuel consumption is rather low, only slightly over 0.6 pounds per horse power hour. Undoubtedly, the carburetor was adjusted for high economy, as the test was made in the interest of a carburetor representative.

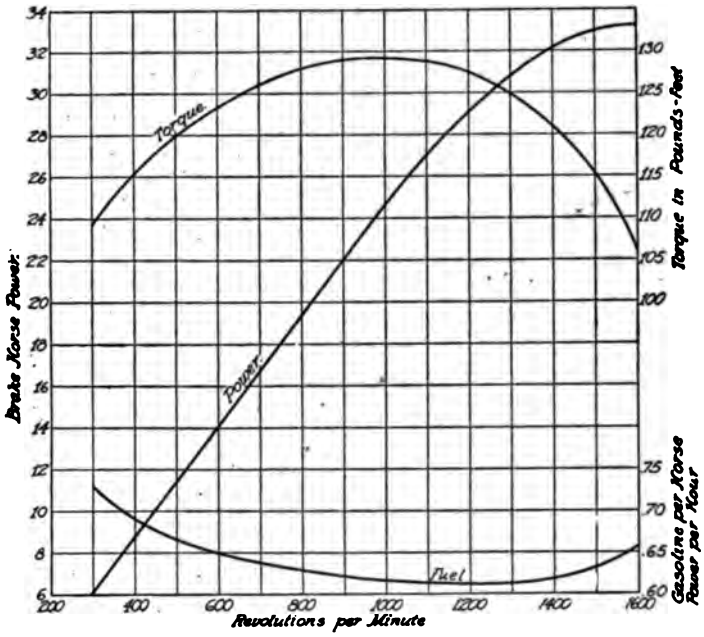

FIG. 265—CHARACTERISTICS OF FOUR CYLINDER, 3¾x5⅛ INCH 1913 WHITE MOTOR.

Power and torque curves of a Moline-Knight four cylinder sleeve valve motor (Chapter XVIII) are shown in Fig. 266. This motor, with a bore of 4 inches and a stroke of 6 inches, was subjected to a 336 hour non-stop test at the laboratory of the Automobile Club of America in December, 1913. In addition to the non-stop test, a number of output and fuel consumption tests were run, and the results of one of these tests are shown graphically in the figure. It appears that the maximum output

was attained at about 1,800 revolution, though the test was hardly carried far enough to show this definitely. The brake mean effective pressure at the speed of maximum torque (1,000 revolutions per minute) figures out to 95 pounds per square inch, and at the speed of maximum output to 77.5 pounds per square inch. It will thus be seen that in the Knight motor the brake mean effective pressure, both at the speed of maximum torque and that

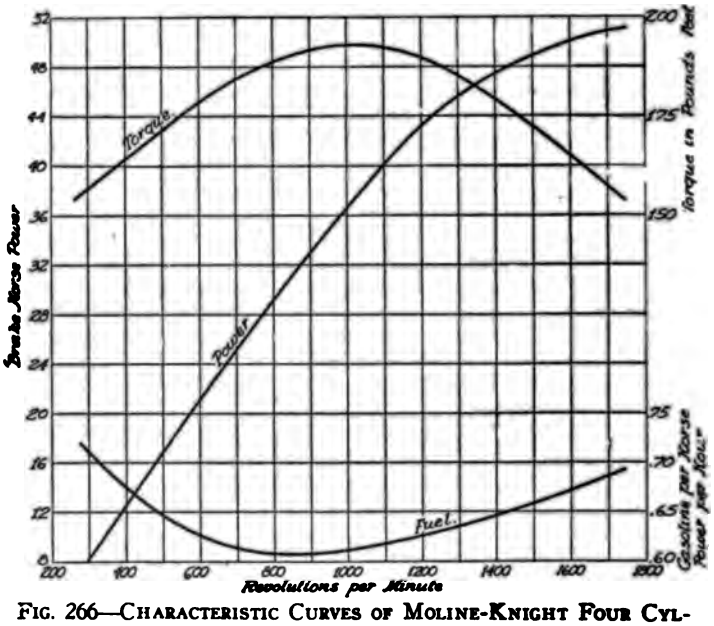

FIG. 266—CHARACTERISTIC CURVES OF MOLINE-KNIGHT FOUR CYLINDER, 4x6 INCH SLEEVE VALVE MOTOR.

of maximum output, is approximately 10 per cent. higher than in the particular poppet valve motor whose performance is represented by Fig. 265.

Maximum Power from Given Cylinder Volume and Motor Weight—There are a number of expedients in design which may be resorted to when it is desired to obtain the maximum output from a motor of given cylinder dimensions or of given weight. The motor must, of course, be so designed that it will run at a very high piston speed. In the first place, the valves must open directly into the cylinder, instead of into pockets at the sides of the cylinder head. This not only makes

the inlet and outlet passages shorter and somewhat more direct, but enables the combustion chamber to be made of a more nearly ideal form, with less surface area. The compression ratio, of course, must be as high as possible without danger from pre-ignition when the motor runs cotninuously under full load. The limiting ratio seems to be a little over 5, but this can only be used for relatively small bores. This brings up the matter of cooling. Energetic circulation of the cooling water and a relatively large radiator capacity are required. Tests show that within the usual temperature range the output is the greater the cooler the cylinder walls are. This is undoubtedly due to the fact that when the cylinder walls are relatively cool, the incoming charge is expanded less, and more charge is therefore taken in. On the other hand, the fuel consumption per horse power seems to decrease with an increase in the cylinder wall temperature.

The valve opening areas must be very large, and the valves must open and close as rapidly as possible. The exhaust valves must not be siamesed, but instead a separate pipe should be run from each exhaust outlet to an expansion chamber at some distance from the cylinders—if the motor must exhaust through a muffler. But any kind of muffler absorbs some power, and for this reason the motors on racing cars, as a rule, exhaust directly into the atmosphere through short lengths of pipes.

In determining the valve timing the inertia of the gases must be taken into account. The exhaust valves must therefore open very early—as much as 50 degrees of crank travel ahead of the dead centre—and the inlet valve close very late—as much as 50 degrees past the dead centre. The exhaust valve should close and the inlet valve open about 15 to 20 degrees past dead centre. A motor with such a timing will not run very well at low speeds, and will, therefore, not be so flexible as one with the more usual timing, but this is the price that has to be paid for high maximum output.

The reciprocating parts must be made as light as possible, so as to keep down the inertia forces and the friction losses resulting therefrom. In the early part of this work the average reciprocating weight was stated to be 0.45 pound per square inch of piston head area. This relates to standard commercial practice. The weight can, however, be made very much less. In Fig. 267 is illustrated a 4.8 inch hydraulically forged steel piston, as made by a French firm, which weighs only 3½ pounds. It may be inferred that a similar 4 inch piston would weigh about 2¼ pounds. The piston pin and two rings together will weigh about ½ pound, and the connecting rod can be made to

weigh not over 2 pounds. Hence the total reciprocating weight would be only 3.75 pounds, or about 0.3 pound per square inch of piston head area.

G. A. Burls, in a paper read before the Institution of Automobile Engineers (Great Britain), found that the weight of the reciprocating parts where cast iron pistons are used may be expressed by the equation

$$m = 0.08\, b^2\, (1 + 0.15\, r) + 1.5 \text{ pounds} \qquad (96)$$

and where pressed steel pistons are used by

$$m = 0.05\, b^2\, (1 + 0.15\, r) + 1.5 \text{ pounds} \qquad (97)$$

The Motor as a Brake—When the spark is cut off and one of the lower gears is engaged, the gasoline motor acts as an excellent vehicle brake. Its braking resistance is partly due to

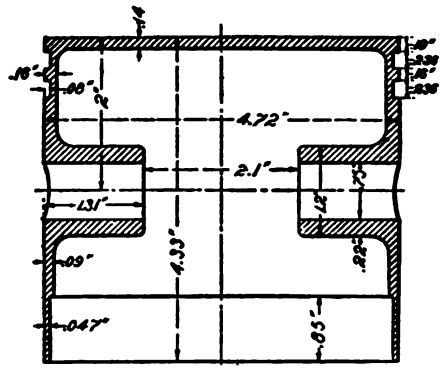

FIG. 267.—HYDRAULICALLY FORGED STEEL PISTON.

mechanical friction in the engine and partly to the loss of energy in compressing and re-expanding combustible charge. The loss in the latter operation is due to surface friction of the passages, leakage of the charge when compressed, and to dissipation of heat generated by the compression of the charge, through the cylinder walls. When the motor is thus driven by the car it will draw in a charge of combustible gas during the first or suction stroke, which will absorb a slight amount of power. This charge will be compressed during the second stroke, whereby a considerable amount of power will be absorbed. During the third stroke, however, the compressed charge will expand again, whereby nearly all the power absorbed by the compression will be given out again. During the fourth stroke the charge will be

forced out of the cylinder, with the expenditure of a small amount of energy.

The braking effect can be considerably increased by opening the exhaust valve at the beginning of the third stroke and holding it open during the whole of that stroke. The charge compressed during the second stroke will then escape through the exhaust valve at the beginning of the third stroke and not expend its energy on the piston.

A series of tests to determine the braking effect of a gasoline motor were made by Dr. W. Watson and reported by him in a paper read before the Automobile Club of Great Britain and Ireland on February 15, 1906. The tests were made on a two cylinder 3½ by 4 inch engine at the comparatively low speed of 590 revolutions per minute. The results of the tests were as follows:

	Horse Power.	Ratio of Braking to Power, Per cent.
Power delivered at clutch by engine when working.	3.7	..
Braking effect with throttle closed	1.32	33
Braking effect with throttle closed and compression cock open	1.69	46
Braking effect with exhaust valve prevented from opening	1.60	43
Braking effect with exhaust valve opened during third stroke	2.40	65

The tests also showed that the mechanical friction was 0.75 horse power, and, of course, the difference between the braking effect under different conditions and the friction represents power used in compressing and moving the air.

The braking effect can be still further increased by suitable modifications of the valve gear, so that a charge will be compressed in the cylinder during every up-stroke of the piston and allowed to escape at the end of that stroke. One method of accomplishing this is made use of on the Saurer motor truck. In the engine of this truck, during the first stroke air is drawn in through the inlet valve, during the second both valves are closed and the air is compressed, during the third the exhaust valve opens and allows the air to escape and the cylinder to be drawn full again, and during the fourth the exhaust valve, which ordinarily is open during this stroke, remains closed and the charge is compressed. After this the cycle is repeated, the charge compressed during the fourth stroke escaping through the inlet valve immediately upon the beginning of the down stroke. This system, of course, necessitates shifting of the exhaust cams.

A system has also been devised in which the braking effect can be varied by the operator. Both the inlet and exhaust cams are shifted longitudinally and provided with extra cam bosses which come into action when the cams are moved into the braking position. Fig. 268 shows the form of the exhaust cam used with this system, and Fig. 269 the form of the inlet cam. It will be seen that the exhaust cam, in addition to the regular cam boss *A*, is provided with two extra cam bosses *BB* at right angles to the former. The three cam bosses are suitably in-

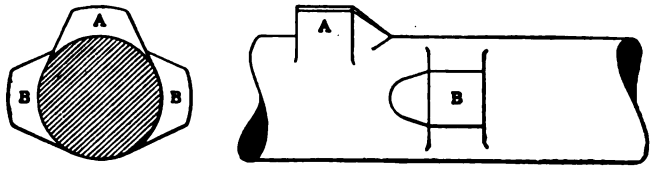

FIG. 268.—EXHAUST CAM FOR MOTOR BRAKE.

clined at their adjacent ends so that the cam roller may travel from the regular boss on to the extra bosses, and vice versa. The inlet cam also has two extra bosses *DD* at right angles to the regular boss *C*, and all of its bosses are also inclined at the ends. The two extra bosses on the inlet cam are sloped so that they will hold the inlet valve open during smaller or greater fractions of the up-stroke, according to the longitudinal position of the cam relative to the cam roller.

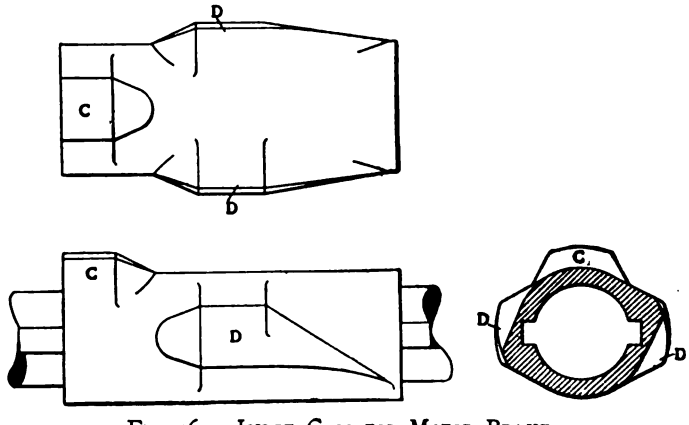

FIG. 269.—INLET CAM FOR MOTOR BRAKE.

When the exhaust cam is shifted in the direction of the arrow, so as to bring the extra cam bosses underneath the cam roller, the exhaust valve will be kept open during the first and third strokes of the motor; that is, during each down-stroke. During these strokes air will be drawn in through the exhaust valve. This air will be compressed during the up-strokes, and most of it will be discharged through the exhaust valve at the beginning of the following down-stroke. Simultaneously with the exhaust cam the inlet cam is shifted in the direction indicated by the arrow. If the cams are shifted to the limit of their range of motion, the cam bosses *DD* are out of line with the cam roller, and the inlet valves remain closed. But in intermediate positions of the cams the two extra cam bosses *DD* will hold

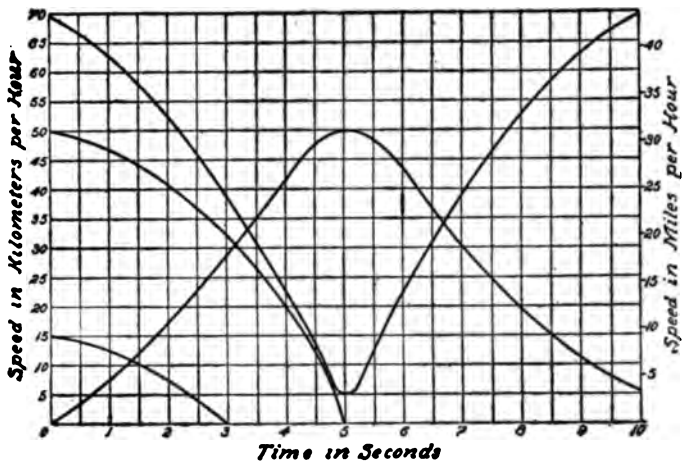

FIG. 270.—MOTOR BRAKE DECELERATION CURVES.

the inlet valve open during a smaller or greater fraction of the up-strokes, thus allowing some of the air to escape from the cylinder before it is compressed, so reducing the work of compression. Experience has shown that with motors arranged as above described the braking effect is as much as 80 per cent. of the maximum power output.

The motor is thus transformed into a brake by simply shifting the camshafts or the cams thereon. This should be done by means of the same lever by which the speed of the motor is controlled. Some deceleration curves of a car equipped with

a motor brake of the type above described are shown in Fig. 270. The chief advantage of the motor brake over the regular friction brake is that it can be used for any length of time without undue heating and without excessive wear. Besides, it can be applied gradually, with little effort and without first removing the hand from the speed control lever. Figs. 268-270 are from *Der Motorwagen,* of Berlin.

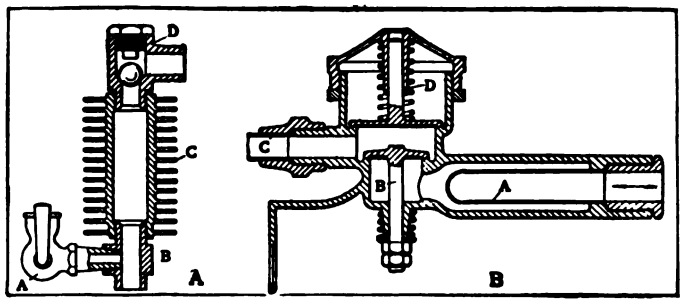

FIG. 271.—PRESSURE TAP VALVES.

As a Source of Gas Pressure—Gas pressure can be used on an automobile for many purposes, as for operating a signaling device or a motor starter, for inflating tires, for feeding fuel, etc. A supply of gas under any pressure up to about 100 pounds per square inch can easily be obtained from one or more cylinders of a motor. As regards the use of the gases for the inflation of tires, it should be pointed out that the products of combustion are not as efficient for this purpose as is atmospheric air, for the reason that the gases filter through rubber much quicker than does air.

In order to obtain a supply of gas under pressure from the motor for such purposes as operating a motor starter, a check valve, similar to that shown in Fig. 271 at *A* is used. This fitting is generally screwed into the hole for the priming cock, and the priming cock *A* in turn is screwed into the nipple *B* at the bottom of the check valve, as shown. The central portion *C* of the check valve is flanged so as to prevent the valve from attaining an excessive temperature. The check valve proper, *D*, is of the ball type, the motion of the ball being limited by a stop formed integral with the screw closing the hole through which the ball is introduced. From this check valve a tube is run to the tank in which the gas is to be stored. At each explosion

in the cylinder the ball valve will lift and allow a small amount of gas to pass, but as soon as the pressure in the cylinder drops the valve will close and thus trap the gas which has passed it. As already stated, a pressure of more than 100 pounds to the square inch can thus be obtained in the tank.

For feeding gasoline from a tank located under the vehicle frame at the rear to the carburetor under the motor bonnet in front or to an auxiliary tank on the dashboard, a pressure of several pounds per square inch is sufficient. This pressure can be obtained from the engine by means of a reducing valve, as shown in Fig. 271 at B. This valve is usually connected to the exhaust manifold just beyond its connection to the engine. The gases first pass through a strainer *A* which prevents particles of carbon from passing into the fuel tank and causing trouble in clogging the spray nozzle. Next, the gases pass through the check valve *B* and then out through the tube *C* which leads to the fuel tank. In order to insure that the gas pressure will never exceed the predetermined maximum value a second spring-loaded valve *D* is provided, whose spring is so adjusted that the valve will open when the predetermined maximum pressure is exceeded, allowing some of the gases to escape and the pressure to be relieved.

Weight of Motors—There is considerable variation in the weight of different motors of the same cylinder dimensions. On the whole, the higher grades of motors generally weigh less than cheaply built ones. If the wall thicknesses are made small the best grade of workmanship is required, and, besides, in many parts the use of high grade materials permits of making the cross-sections smaller. It is a most remarkable thing that the weight per horse power of explosion engines varies from several hundred pounds in stationary gas engines to as low as two pounds in flying machine engines. Automobile engines are intermediate between these two extremes in respect to weight. A fair approximation to the weight of motors designed in accordance with the rules laid down in this work may be obtained by means of the following equations:

Weight of a single cylinder motor $= 2.8\, b^2\, l$ pounds;
of a double cylinder $= 3.6\, b^2\, l$ pounds;
of a four cylinder $= 5\, b^2\, l$ pounds;
of a six cylinder $= 7\, b^2\, l$ pounds,
b being the bore and l the stroke in inches.

These rules apply to motors with aluminum crank cases.

In order to reduce the weight per horse power, the first essential is that the reciprocating parts be made as light as possible,

so as to permit of high piston speed and consequently increased output. Other expedients for reducing the weight of motors are the use of sheet metal jackets, block cylinders, or cylinders so cast as to permit of their being bolted together to form a block; hollow crankshafts, sheet metal crank bases, cast steel flywheels of large diameter and tubular or I-beam construction for all parts subjected to compression and bending stresses.

CHAPTER XVIII.

SLEEVE, PISTON AND ROTARY VALVE MOTORS.

Up to about 1908 the only form of valve that had proven commercially successful on gasoline motors was the poppet valve. Dr. Otto, the inventor of the four cycle gas engine, in one of his earliest machines used a sliding valve, and all the different forms of valves used in steam engines, including flat slide, piston and rotary valves, were at one time or another applied to gasoline motors, but they never proved successful in the long run. In 1908 Charles Y. Knight, of Chicago, induced the Daimler Motor Co., of Coventry, England, to take up a motor of his invention in which the valve functions are performed by two ported sleeves one within the other, and both between the piston and the cylinder wall. The two sleeves are reciprocated by a half speed shaft carrying small cranks equal in number to the sleeves. This motor has since proven very successful, and has been taken up by leading manufacturers in different European countries and in the United States.

The Knight Motor—Fig. 272 is a sectional view through one of the cylinders of a Knight motor built by Panhard & Levassor, of France. Within the cylinder bore there is a thin sleeve *A* of cast iron, cut with ports on opposite sides for the inlet and exhaust. Within this sleeve there is another, *B*, also cut with ports near its upper end, and within the latter sleeve is located the piston. In these motors the cylinder head *C* is detachable. and is of rather unusual construction. A part of it extends into the cylinder for quite a distance, but is of a diameter smaller than the cylinder bore, so the two sleeves may enter between it and the cylinder wall. Both the cylinder head and the piston head are concave or bowl shaped, the object being to secure as nearly as possible a spherical combustion chamber. The two sleeves are reciprocated by means of a half speed shaft, which is driven from the crankshaft through a silent chain. The half-speed shaft is formed with eight cranks, and these cranks connect through short connecting rods *EE* with lugs formed on the

valve sleeves at their lower ends. The connecting rods for the two sets of sleeves are of different lengths, and usually they are slightly inclined, that is to say, the vertical line along which their upper end reciprocates does not pass through the axis of the half speed shaft, but is somewhat closer to the cylinder axis—this for the sake of compactness. It will be noticed that the drive of the sleeves is unsymmetrical, a feature the practicability of which was questioned at one time, but it has been found that

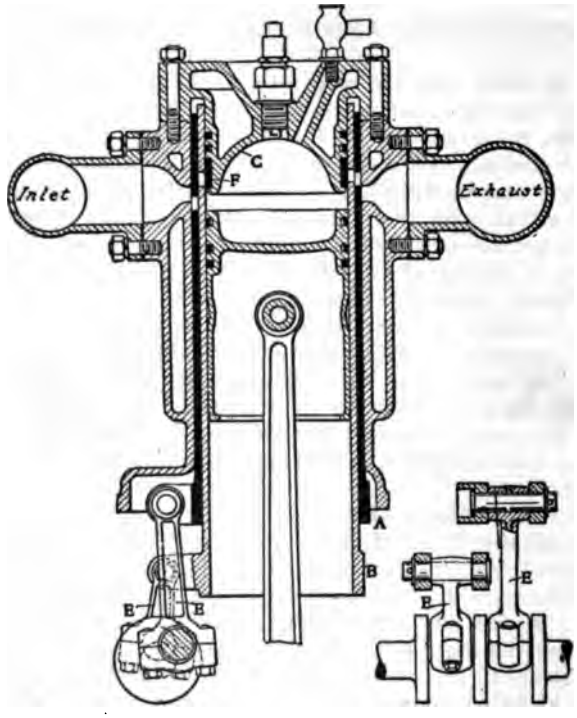

FIG. 272.—SECTION THROUGH CYLINDER OF PANHARD-KNIGHT MOTOR.

owing to the long bearing of the sleeves it does not cause any trouble. At the lower ends, where the driving lugs are, the sleeves are suitably strengthened by circumferential flanges.

One peculiarity of the Knight motor is that the bore of the cylinder casting is not the effective bore of the engine, the latter being equal to the bore of the inner valve sleeve. The sleeves

are made of a thickness equal to about 0.040 inch per inch of effective bore. The outer sleeve is sometimes made slightly thinner than the inner one, because it is not subjected to the pressure of the explosion. Thus, for instance, in the 100x140 mm. Panhard-Knight motor the inner sleeve is made 5 mm. and the outer sleeve 4 mm. thick. The bore of the cylinder casting in this motor is therefore 118 mm.

Packing Ring Arrangement—Gas tightness is insured by two sets of packing rings, one set of three or four being placed on the piston in the usual way, and the other set on that portion of the cylinder head which extends into the cylinder and is surrounded by the valve sleeves. The latter set comprises one unusually broad ring, *F*, at the bottom, referred to as a junk ring, and two or three rings of the same dimensions as used on the piston. The junk ring itself does not possess sufficient spring force to apply it properly against the valve sleeves, and spring rings are placed underneath it. At least, this is the construction used in most Knight motors. The object of the junk ring is to seal the ports in the valve sleeves while the explosion takes place and the gases expand in the cylinder. This ring, therefore, must be made of greater width than the height of the port. It is usually made about half an inch wider than the exhaust port. In Fig. 272 the moving parts are shown in the position corresponding to the beginning of the power stroke, and it will be seen that both the inlet and exhaust ports in the inner sleeve are fully covered by this junk ring.

Port Dimensions—Each port extends substantially one-third around the cylinder. The ports are provided with a bridge at the middle of their length so as to prevent undue weakening of the sleeve. On the theory that the port area should be proportional to the piston head area, the height of the ports should be proportional to the effective bore or piston diameter. Most of the Knight motors built so far have been of about 4 inches bore and slightly over 5 inches stroke, and in these the inlet port is made ½ inch and the exhaust port ⅝ inch high.

Valve Motion and Timing—The valve action and the effect of various factors upon the valve timing can best be studied by means of the diagrams Figs. 273 and 274. It may be stated that the small cranks for driving the two valve sleeves are in practice set so as to make an angle of 60 to 90 degrees with each other. In the diagrams it is assumed that they are set at an angle of 80 degrees. It is further assumed that the half speed shaft is directly underneath the hinge joint to the lug of the sleeve, and that the connecting rods are of twice the length

of the valve motion. We have here a regular crank and connecting rod mechanism, the same in every particular as the main crank and connecting rod of the engine, and the laws of motion previously deduced for this mechanism therefore apply in this case. We found (equation 20) that the distance which the piston moves from its topmost position, while the crank turns through an angle θ, is

$$x = \frac{l}{2}(1 - \cos\theta) + n\,l\left(\frac{\sin^2\theta}{8\,n^2}\right),$$

where n is the ratio of connecting rod length to length of stroke. In case the lug joint is offset from the vertical line through the half speed shaft by a distance f, we may apply equation (62)

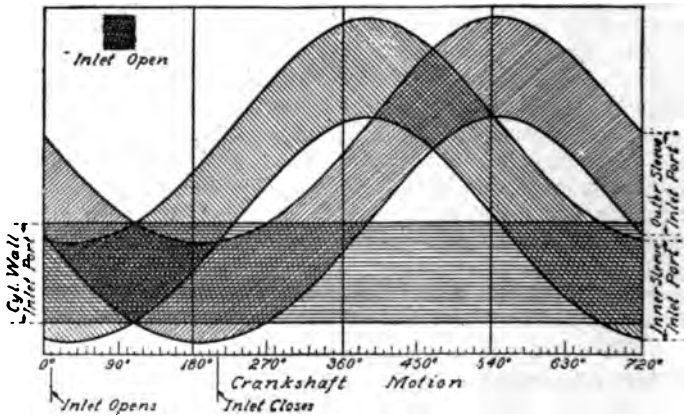

FIG. 273.—DIAGRAM OF INLET ACTION.

according to which the vertical distance between the axis of the half speed shaft and the centre of the lug on the valve sleeve is

$$x_1 = n\,l - \frac{n\,l}{2}\left(\frac{\sin\theta}{2\,n} - \frac{f}{n\,l}\right)^2 + \frac{l}{2}\cos\theta.$$

The curves in Figs. 273 and 274 were drawn by means of the first of these equations. The sleeve travel was assumed to be 1⅛ inches. It will be noticed that in each diagram there are four curves, representing the up and down motion of the top and bottom edges of the inlet and exhaust ports in the sleeves respectively. In Fig. 273 there are also two horizontal lines representing the top and bottom edges, respectively, of the inlet port in the cylinder wall. The inlet begins to open when the bottom edge of the port in the outer sleeve, moving downwardly, passes the top edge of the port in the inner sleeve moving down-

wardly. The inlet closes when the bottom edge of the port in the inner sleeve, moving upwardly, passes the top edge of the port in the outer sleeve also moving upwardly. By reference to the scale at the bottom of the diagram it will be seen that the inlet extends over 200 degrees of crank motion. Now, it is customary to open the inlet 10 to 15 degrees after the crankshaft passes the upper dead centre and to close it about 30 to 35 degrees after the crankshaft passes the lower dead centre. Since the total opening extends over 200 degrees, or 20 degrees more than a half revolution, it is evident that the lag of inlet closing must exceed the lag of inlet opening by 20 degrees. We

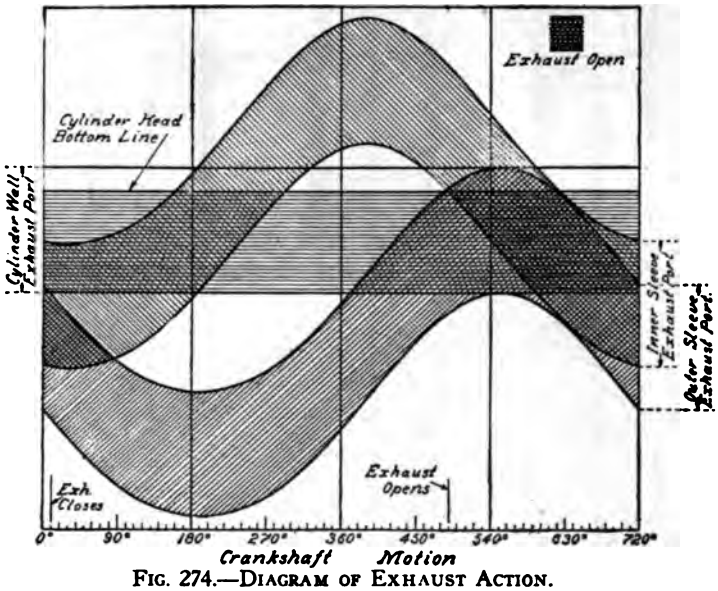

FIG. 274.—DIAGRAM OF EXHAUST ACTION.

will therefore let the inlet open 10 degrees late and close 30 degrees late. The point on the horizontal axis at which the inlet begins to open therefore corresponds to a crankshaft motion of 10 degrees from the top dead centre. This enables us to plot the four dead centre positions on the horizontal scale, and to properly divide the whole scale.

Fig. 274 is a diagram of the exhaust port action. The exhaust begins to open when the lower edge of the port in the inner sleeve, moving downwardly, passes the lower edge of that portion of the cylinder head which extends into the cylinder.

The exhaust closes when the top edge of the port in the outer sleeve, moving downwardly, passes the lower edge of the port in the cylinder wall. In order to secure the proper length of valve opening the ports in the inner and outer sleeves are placed at different levels, the one in the outer sleeve being at a lower level (¾ inch lower in the diagram). The exhaust opening under the assumptions here made extends over a period corresponding to 240 degrees of crank motion. The exhaust

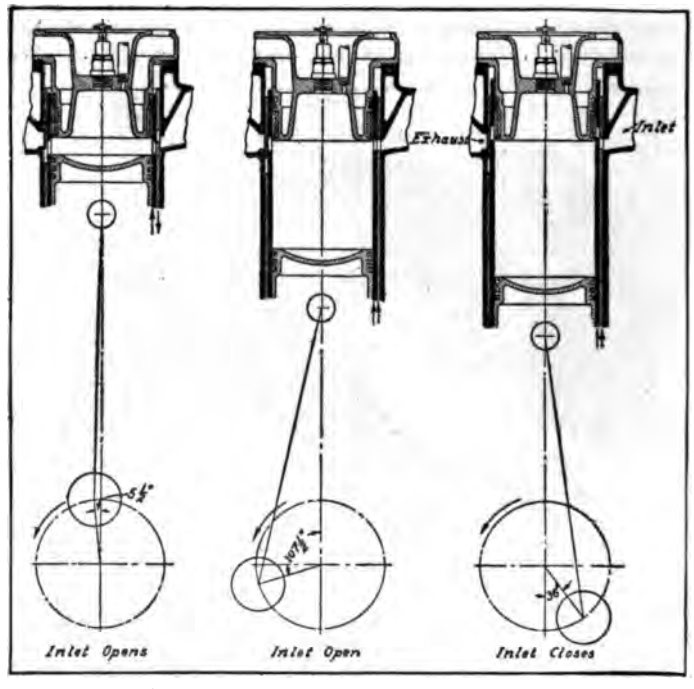

FIG. 275.—INLET TIMING OF STEARNS-KNIGHT MOTOR.

begins to open 50 degrees ahead of the lower dead centre and closes 10 degrees past the top dead centre. In order to effect this valve timing the half speed shaft must be so set that when the motor crankshaft is in the top dead centre position at the beginning of the inlet stroke, the crank operating the inner sleeve has to travel through 15 degrees until it reaches the bottom dead centre position, and the crank operating the outer sleeve has to travel through 95 degrees till it reaches the bottom dead centre position.

Diagrams like the above are very convenient for studying the effect of various changes in the ports and valve gearing, as, for instance, a change in the angle between the cranks for the two sleeves of each cylinder, a change in the width of ports, etc. It may be pointed out that the various licensees under the Knight patent design their engines in their own way and employ different valve timings. As a rule, since the large area of port opening allows of very high piston speeds, the inlet valve is given a considerable lag and the exhaust port considerable lead.

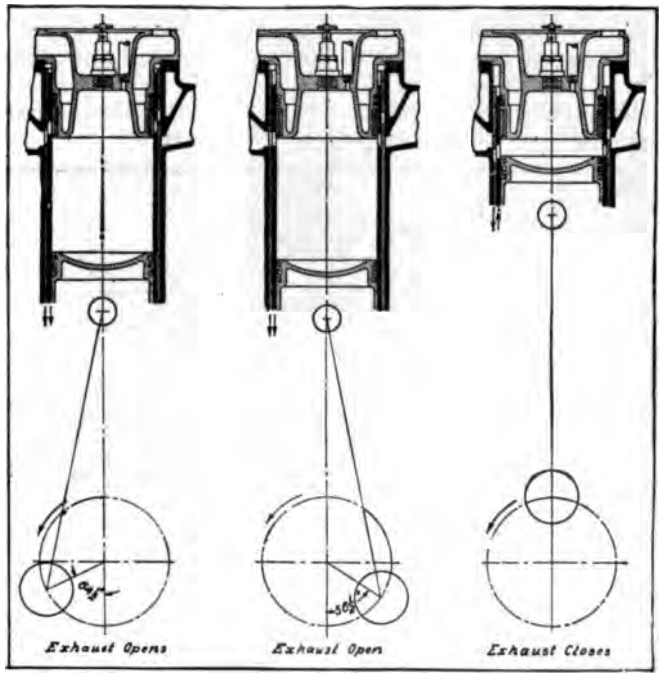

FIG. 276.—EXHAUST TIMING OF STEARNS-KNIGHT MOTOR.

Figs. 275 and 276 show the positions of the valves and the crank of a Stearns-Knight motor when the inlet begins to open, is fully open and closes, and when the exhaust begins to open, is fully open, and closes. This motor, contrary to ordinary practice, turns in a counter clockwise direction. It will be noticed that the exhaust has the extreme lead of 64½ degrees, but no lag.

Port Opening Areas—The two chief advantages claimed for the Knight motor are, first, its high output for given cylinder dimensions, which is due partly to the large area and rapid opening and closing of the valve ports, and partly to the favorable form of the compression chamber; and, second, its silent operation. It may be of interest to compare the valve capacity of a Knight motor with that of a poppet valve motor. Suppose a motor of 4 inch bore to have inlet ports ½ inch high and extending one-third around the circumference. Also, let the valve timing be that depicted in Fig. 273. Then the opening of the valve is represented by the diagram Fig. 277. This diagram is practically a triangle, the opening curve being very slightly concave and the closing curve convex (from the inside). The average height of opening is therefore ¼ inch. The length of the port around the circumference is

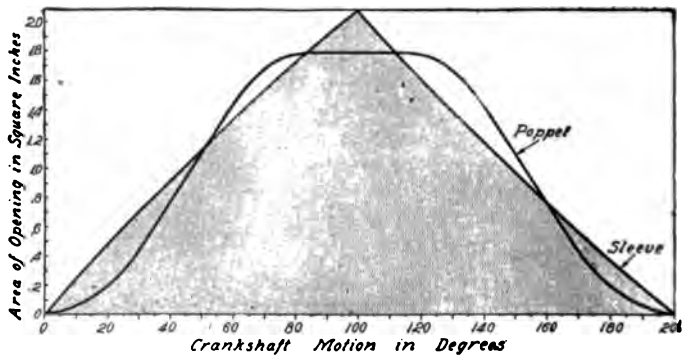

FIG. 277.—AREA-OF-INLET-OPENING DIAGRAM.

$$\frac{4 \times 3.14}{3} = 4.19 \textit{ inches},$$

and the valve capacity therefore is

$$4.19 \times \tfrac{1}{4} \times 200 = 209.5 \textit{ square inch-degrees.}$$

Now let us see what diameter of poppet valve would be required to equal this. Assume that the lift of the poppet valve is one-fifth of the clear diameter. Also assume that the valve is opened with constant acceleration and deceleration in 85 degrees of crankshaft motion, and that the total opening period is 200 degrees of crank motion. Then the equivalent duration of full opening is

$$200 - 85 = 115 \textit{ degrees},$$

and the full opening area of the valve must be

$$\frac{9.5}{115} = 1.82 \textit{ square inches.}$$

Now, according to equation (88) the area of opening of a poppet valve is

$$A = \pi (0.7\, d\, h + 0.35\, h^2)$$

and with

$$h = \frac{d}{5},$$

$$A = \pi (0.14\, d^2 + 0.014\, d^2) = 0.484\, d^2.$$

We have, therefore,

$$0.484\, d^2 = 1.82 \textit{ square inches.}$$

$$d = \sqrt{\frac{1.82}{0.484}} = 1.94 \textit{ inches.}$$

A diagram showing the variation of the opening area of a poppet valve of 1.94 inches clear diameter is superposed on the sleeve valve diagram in Fig. 277. The two diagrams should be of the same area. It appears that the sleeve valve diagram has a slightly greater area, which is probably due to a slightly erroneous assumption in making the calculation. It is absolutely correct that the average lift of the poppet valve for the whole period of opening, viz., 200 degrees, is equivalent to the maximum lift during 115 degrees of opening, but since the area of opening is not absolutely proportional to the lift (see equation 88) the average opening of the valve for the full period is equivalent to a full opening for a slightly different period. The difference is negligible, however.

It is frequently said that the sleeve valve opens much quicker than the poppet valve, but this is only partly correct. The fact is that the sleeve valve opens and closes at substantially uniform speed, whereas the poppet valve begins and ceases to open at practically no speed and attains its maximum opening speed at half opening. The sleeve valve opens the most rapidly at first but the least rapidly later on, and the poppet valve attains its full opening in a shorter time than the sleeve valve.

Fig. 278 shows the opening diagram of the exhaust ports for a sleeve valve, the maximum width of the port opening being ½ inch, the length 4.19 inches and the timing as in Fig. 274. It will be seen that the port attains its maximum opening in 103 degrees of crankshaft motion, remains fully open for 27 degrees and closes 240 degrees of crankshaft motion after beginning to open. The valve capacity, therefore, is

$$\frac{27 + 240}{4} \times 4.19 = 280 \textit{ square inch-degrees.}$$

In order that a poppet valve having a lift equal to one-fifth the clear diameter, which is accelerated and decelerated uniformly

and attains its full lift in 85 degrees of crank motion, may have an equal valve capacity, it must have a diameter d such that

$$0.484\, d^2 = \frac{280}{240 - 85} = 1.807 \textit{ square inches.}$$

$$d = \sqrt{\frac{1.807}{0.484}} = 1.93 \textit{ inches.}$$

It may be said that comparatively few poppet valve motors are fitted with such large valves.

Silent Operation—The other advantage of the sleeve valve motor is its silent operation at all speeds. This is due to the fact that the valves are closed (as well as opened) positively. Besides, the half speed shaft is driven by a silent chain instead of spur or helical gears. The absence of valve pockets and exposed valve gear members also gives the motor a simple and rugged appearance.

FIG. 278.—AREA-OF-EXHAUST-OPENING DIAGRAM.

Power Consumed by Sleeves—Owing to the fact that most of the time while there is considerable pressure in the cylinder the sleeves travel in the same direction as the piston, comparatively little power is required for moving the sleeves. It can be seen by reference to Fig. 273 that both sleeves move up with the piston during the compression stroke and that the inner sleeve moves down with the piston during the power stroke. The outer sleeve, however, moves in opposition to the piston during the power stroke. Mr. Knight states that tests made on a six cylinder, 75 h. p. motor showed that 2 h. p. was required for driving the half speed shaft.

Lubrication and Cooling—One of the chief problems with a motor of this kind is undoubtedly effective lubrication of the

sleeves. Most of the motors manufactured under the Knight patents are provided with splash lubrication, and it is claimed that the suction in the ports during the inlet stroke draws the oil up between the sleeves, the piston and the cylinder wall. The splashers secured to the connecting rod heads dip into oil troughs underneath the cranks, which are hinged and connected with the throttle so that they are raised and lowered as the throttle is opened and closed respectively. This is illustrated in Fig. 279. In the Panhard-Knight motor, however, oil is fed to the sleeves through a passage in the cylinder head. The sleeves in every case are cut with helical oil grooves on the outer surface, and in the Panhard motor they are in addition drilled with numerous

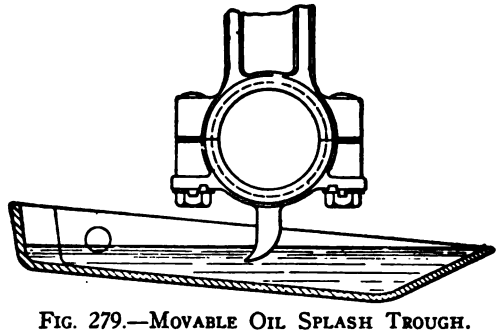

FIG. 279.—MOVABLE OIL SPLASH TROUGH.

oil holes so that the oil may pass from one side of the sleeve wall to the other.

The question has been raised as to whether there would not be danger of the edges of the ports being burned by the hot gases, but it is stated that inasmuch as both of the ports in the inner sleeve are covered by the junk ring at the moment of explosion and for some time thereafter, their edges are not exposed to the maximum temperature occurring in the cylinder, and no trouble from burning is experienced.

Test Results of Knight Motor—A very rigid test of a four cylinder Knight motor of 96 mm. bore and 130 mm. stroke was made during March, 1909, by the Royal Automobile Club of Great Britain and Ireland. At first a bench test was made extending over five days twelve hours and fifty-eight minutes. No penalized stops occurred, but two stops of an aggregate duration of seventeen minutes were made which incurred no penalty. According to the conditions of the test, 35.3 h. p. was to be obtained at 1,400 r. p. m., and the power

was at no time to fall below this figure. The average horse power recorded during the time of the trial was 38.83 (A. L. A. M. rating 22.85). The gasoline consumed amounted to 476.5 gallons, equivalent to 0.668 pound per horse power hour. On the completion of this bench test the engine was fitted into a chassis, under observation, without any of the vital parts being disturbed, and the car was fitted with a standard touring body. The car was then driven 229 miles on the road and 1,915.1 miles on Brooklands track, the average speed made on the track being 41.88 miles per hour. The gasoline consumption on the track was at the rate of one imperial gallon per 22.44 miles, equivalent to 33.37 ton-miles per imperial gallon. At the conclusion of the road test the engine was removed from the chassis, and, without having any of its vital parts disturbed, was submitted to another bench test which lasted for five hours two minutes. During this test there were no stops whatever, the average horse power recorded was 38.96, and the average gasoline consumption 0.677 pound per horse power hour. The engine was then completely dismantled and no perceptible wear was noticeable.—A 336 hour non-stop run under full throttle at 1,100 feet piston speed per minute was made by a Moline-Knight engine at the Automobile Club of America laboratory in December, 1913 (see page 416).

Piston Valves—Since the Knight motor proved to be a success there has been considerable development in gasoline engine valves of other than the poppet type. A large number of patents have been taken out, particularly in England, for piston and rotary valve motors. The piston valve, as a rule, consists of a piston similar to the one in the working cylinder which reciprocates in a valve cylinder generally parallel with the cylinder, but which may extend horizontally across the cylinder head or open into the cylinder head at an angle. This valve piston is driven from a half speed shaft through a small crank and connecting rod. In some cases the valve cylinder opens directly into the working cylinder, while in other cases it communicates with it through a port. In the former case there is a passage in the side of the valve cylinder which is uncovered by the valve piston during the desired period of valve opening. A design of the second kind is shown in Fig. 280. Here the valve piston is double ended, with a partition wall in the centre and a port in its side wall just above the partition wall, which registers with the port in the wall of the working cylinder at the proper time. Since the port in the valve piston registers with the cylinder port

during both the up and the down stroke of the valve pistons, the valve operating shaft in this instance must be geared to run at one-quarter crankshaft speed. It is obvious that with a valve construction of this kind the valve diagram is of substantially triangular form, the cylinder port being uncovered and then covered at practically uniform speed. The objection to the design is that it is rather bulky.

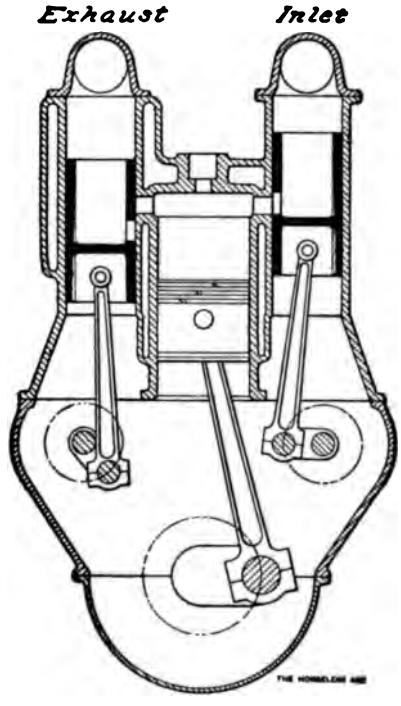

FIG. 280.—PISTON VALVE MOTOR.

Rotary Valves—Numerous designs of rotary valves have also been worked out, but they have not yet been adopted for automobile work to any extent. Fig. 281 shows the Reynolds rotary valve motor made by the Reynolds Motor Co., of Detroit, more particularly for marine service. The valve of this motor consists of a flat disc which seats against the inside of the cylinder head. It is provided with a shaft extending upward through the centre of the cylinder head, and provided

with a spur gear on top of the cylinder head through which it is driven from the crankshaft at one-half the speed of the latter. The valve disc has a port cut into it of the shape shown in Fig. 282, which registers successively with the inlet and exhaust ports of the same shape in the cylinder head. The valve mechanism of this motor is quite noiseless and the motor is of simple and compact design, in which respect it resembles the sleeve valve motor, but it has the disadvantage that the valve is pressed against the seat by the force of the explosion, which causes considerable resistance to its motion, produces heat and tends to squeeze out the lubricating oil between the valve disc and its seat. One advantage of this design of valve is the form of the ports, which are nearly

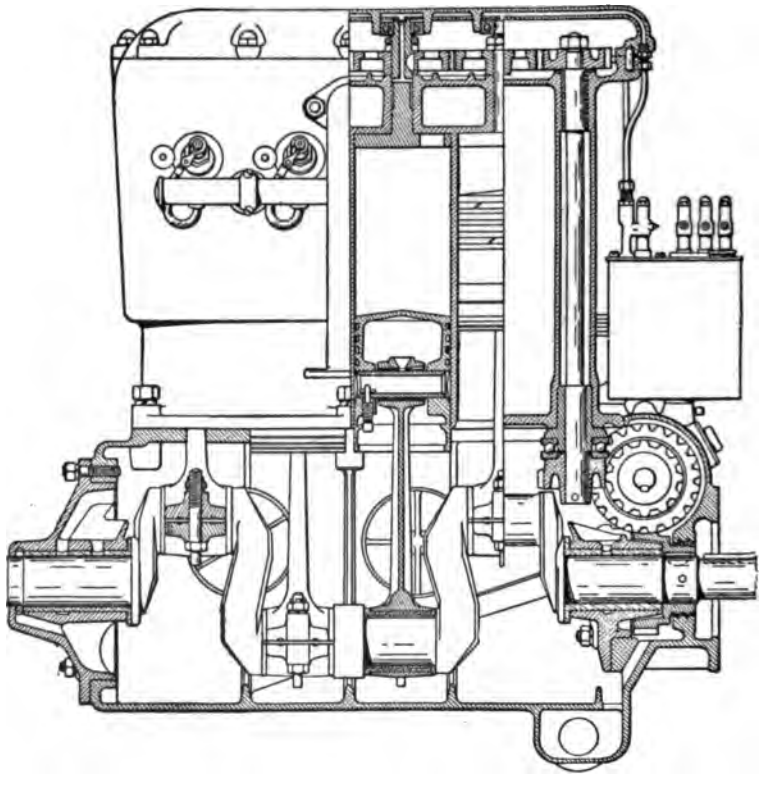

FIG. 281.—REYNOLDS ROTARY VALVE MOTOR.

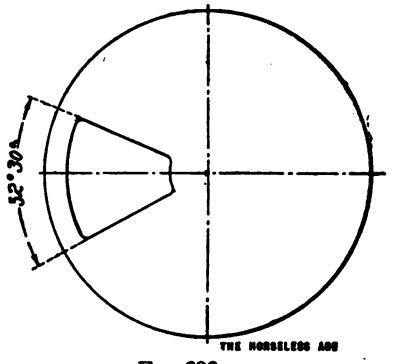

FIG. 282.

square and have a small periphery as compared with their area. This means that the resistance of the port is relatively small.

Another form of rotary valve motor, the Mead, is illustrated in Fig. 283. In this four cylinder motor there are two long valve drums extending along opposite sides of the cylinders

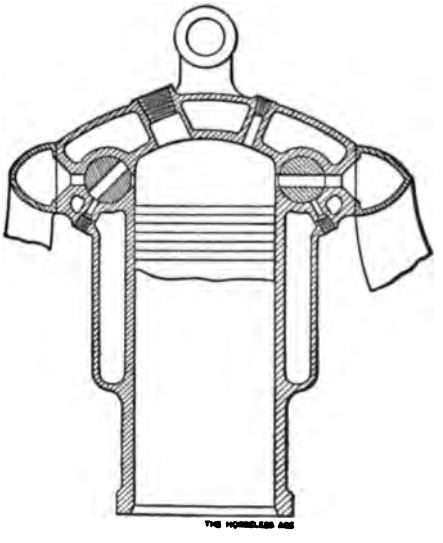

FIG. 283.—MEAD ROTARY VALVE MOTOR.

near their heads. These valve cylinders are cut with diametral ports through them at distances apart equal to the centre distances of the cylinders, and suitably spaced angularly so as to open the ports of the cylinders in the succession in which these cylinders fire. One of the valves serves for the exhaust and the other for the inlet. These valves are driven at quarter engine speed.

Although a great deal of inventive effort has been spent on rotary and piston valve engines, especially since 1909, no cars with such engines are at present (1916) being built in the United States to the author's knowledge. Those interested in these engines will do well to look up articles by Eugene P. Batzell in THE HORSELESS AGE of May 25, June 1 and June 8, 1910, and September 20, September 27 and October 4, 1911.

CHAPTER XIX

THE TWO STROKE CYCLE MOTOR.

The two cycle motor has been and still is used very extensively for marine work, but its use on automobiles has always been limited. In fact, at the present time (1916) there is not a single prominent concern in the United States manufacturing cars with motors of this type.

The characteristic feature of the two cycle motor is that there is an explosion in each cylinder during every down stroke of the piston, instead of during every second down stroke, as in the four cycle motor. One other feature which distinguishes the two cycle motor from the four cycle is that the combustible charge must be pre-compressed in order to get it into the working cylinder. This is generally done in the crank case, which is made gas-tight and acts as a pump; but it is sometimes done by means of a pump formed by extensions of the working cylinder and piston or by an entirely separate pump cylinder. As originally adapted from marine practice the two cycle motor was of extreme simplicity, but it possessed certain defects, and in order to overcome these it was found necessary to add parts, thus complicating the motor to a certain extent.

The Two Stroke Cycle—The successive operations in the cylinder and crank case of a two cycle motor are as follows: Referring to Fig. 284, while the piston is moving up in the cylinder it creates a partial vacuum in the crank chamber, and when it reaches a certain point in its up-stroke it uncovers a port *A* in the wall of the cylinder, through which combustible charge from the carburetor is drawn into the crank chamber. During the following down stroke, after the port *A* has been covered by the piston, this combustible charge is slightly compressed in the crank chamber, the usual compression pressure being between 6 and 8 pounds per square inch, gauge. As the piston approaches the bottom end of its stroke it uncovers the transfer port *B* in the cylinder wall (see Fig. 285), and the combustible charge under pressure in the crank chamber flows through the transfer passage

into the cylinder. Shortly after the piston starts on its up-stroke it closes the transfer port, and during the remainder of the up-stroke the charge is compressed in the cylinder. When the piston reaches the top end of the stroke the charge in the cylinder is ignited and the piston is forced down. As the piston approaches the lower end of its stroke it uncovers the exhaust port *C* in the cylinder wall opposite the transfer port *B* (see Fig. 286), and the burnt gases, which are still under considerable pressure, escape through this port. It should be pointed out that

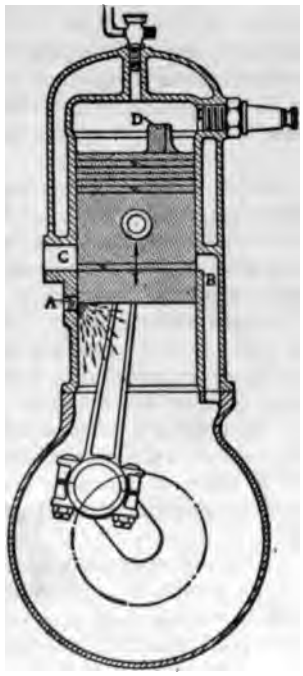

FIG. 284.—ADMISSION TO CRANK CASE.

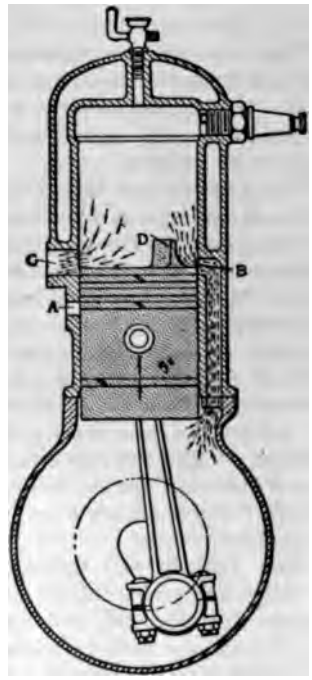

FIG. 285.—TRANSFERENCE OF CHARGE.

the exhaust port opens slightly earlier than the transfer port, and a considerable portion of the burnt gases escapes before any new charge enters through the transfer port. The rest of the burnt gases are swept out by the incoming fresh charge. It is, of course, impossible to insure that all of the burnt gases be swept out and that none of the fresh charge escape; but in order to prevent as far as possible the mingling of the fresh charge with

the spent gases a deflector *D* is formed on the piston head opposite the transfer port which deflects the incoming current of fresh gas upwardly (Fig. 285).

The evacuation of the cylinder and the transference of a new charge from the crank chamber to the cylinder, therefore, go on simultaneously; and, besides, the periods of admission and exhaust, measured in degrees of crank motion, are much shorter than in the four cycle motor. While in a four cycle motor the admission extends over a period corresponding to about 200 degrees of crank motion, and the exhaust to a period corresponding to 230 degrees of crank motion, in a two cycle motor the inlet extends over less than 90 degrees of crank motion, and the exhaust over less than 120 degrees of crank motion.

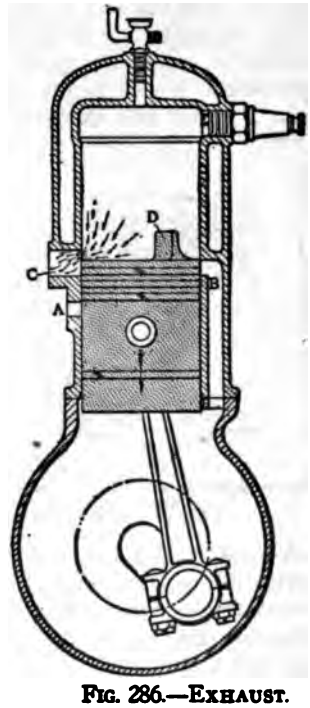

FIG. 286.—EXHAUST.

Crank Case Inlets—In the older designs of two cycle motors the charge from the carburetor was admitted to the crank chamber through a suction operated poppet valve. This type is known as the two port motor, and is extensively used for marine work. It has, however, never found any application for automobile purposes, owing to the fact, it is claimed, that it does not lend itself to operation at high speed. Since the degree of vacuum in the crank chamber is always quite low, the valve actuating force is very small, and it would be expected that at high speeds the inertia of a suction actuated valve would be a disturbing factor in the operation of the motor.

The type of two cycle motor illustrated in Figs. 284-286 is known as the three port type. In it a port is cast in the cylinder wall at such a point that it will be uncovered by the lower end of the piston when the latter approaches the top end of its stroke, and since at that time there is a partial vacuum in the crank chamber, combustible charge from the carburetor is drawn

through the port into the crank chamber. Such a port opens and closes positively, but it remains open only a comparatively short length of time. The suction on the carburetor starts and stops abruptly, which condition calls for a special design of carburetor.

A form of crank chamber inlet which combines positive operation with gradual opening and closing and an extended period of opening is shown in Fig. 287. In this design a flat plate *A* with an inlet port cut in it is bolted to an opening in the crank case. A flat valve disc *B* with a valve port adapted to register with the port in the plate *A* is placed against the plate from the inside and in driving connection with a shaft which is driven at crankshaft speed. The driving means consists of a crossbar *C* pinned to the shaft and provided with two driving pins *D D* and two spring pressed plungers *E E* for driving the

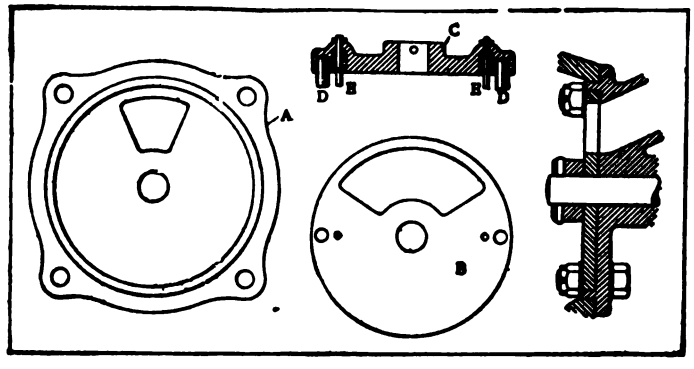

FIG. 287.—DISC TYPE CRANK CASE INLET VALVE.

disc and keeping it in contact with the valve plate, respectively. With this type of inlet valve, charge may be admitted to the crank chamber during 135 degrees of crank motion, that is, from the time the transfer port closes to the end of the up-stroke, or even a little longer. The disc valve may be placed concentric with the crank journal and driven directly from the crank arm, only its rubbing speed then becomes rather high.

A somewhat similar port arrangement consists in forming ports in one of the crankshaft journals and in its bearing. (See Fig. 294.) These ports can be timed the same as the disc valve just described.

Crank Chamber Design—The crank chamber of a two cycle motor differs from that of a four cycle in many respects. In the first place, it must be made as small as possible, or the necessary

crank chamber compression will not be obtained. If we assume that the crank chamber fills to a pressure of 14 pounds per square inch absolute and we wish a precompression of 7 pounds per square inch gauge, or 21.7 pounds absolute, then the required crank chamber volume may be calculated as follows: With this low compression ratio it is permissible to assume that the pressure varies inversely as the volume. Compression begins when the inlet port closes and ends when the transfer port opens. We will assume that the motor is of 4 inches bore and 4½ inches stroke, that it is of the three port type, that both the inlet and transfer ports are ½ inch wide and that their outer edges are even with the limit of piston travel. Compression then begins when the piston has traveled ½ inch on its down stroke and ends when it

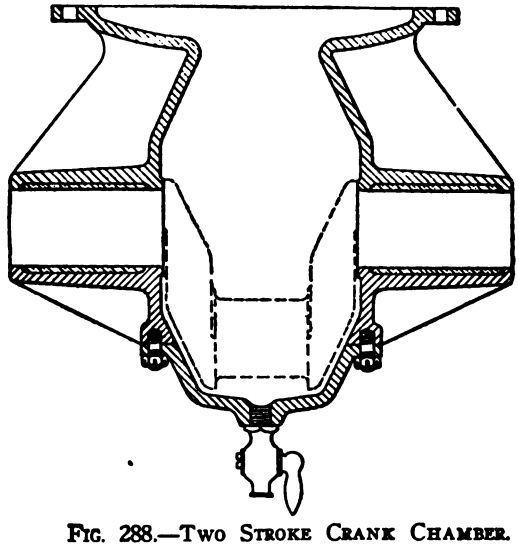

FIG. 288.—TWO STROKE CRANK CHAMBER.

has traveled 4 inches, and has still ½ inch more to travel. Now, let us call the initial volume of the charge V_1 and the final volume V_f. Then the reduction in the volume of the charge during compression is equal to the volume of a cylinder 4 inches in diameter and 3½ inches long, which is

$$\frac{4 \times 4}{4} \times 3.14 \times 3.5 = 43.96 \textit{ cubic inches.}$$

Consequently

$$\frac{V_1}{V_f} = \frac{21.7}{14}$$

$$V_1 - V_f = 43.96$$

$$V_1 = 1.55\ V_1$$
$$0.55\ V_1 = 43.96$$
$$V_1 = 80 \textit{ cubic inches.}$$

That is, the capacity of the crank chamber at the moment the transfer port opens, when the piston is ½ inch from the bottom end of the stroke, must be 80 cubic inches.

In order to get the crank chamber down to this volume, various expedients are resorted to. In the first place, the crank chamber wall is made to come as closely as possible to the form described by the crank in its revolution. Then the connecting rod is made as short as possible, say, 1.8 times the stroke, and if this does not bring the volume down sufficiently a crankshaft with discs instead of crank arms may be used.

A manograph diagram from the crank case of a two cycle motor, taken by Albert L. Clough, is shown in Fig. 289. At the beginning of the up-stroke, there is a slight over-pressure in the crank case, and this increases during the first part of the

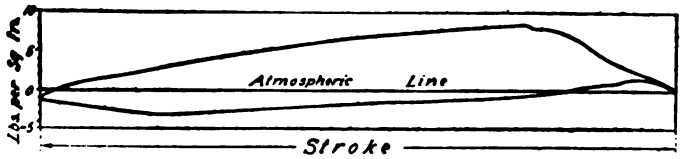

FIG. 289.—CRANK CASE PRESSURE DIAGRAM.

stroke, as long as the transfer port remains open, which may be due to the heating of the charge as it comes in contact with the cylinder walls, or to a return wave following the surging of the charge into the cylinder. Shortly after the transfer port is closed a vacuum begins to form in the crank chamber, increasing up to the point where the inlet port opens. The crank chamber then fills rapidly and at the end of the stroke is filled nearly to atmospheric pressure. During the return stroke the charge is compressed in the crank chamber and attains a maximum pressure of about 8.5 pounds per square inch at the point where the transfer port begins to open. The pressure thereafter rapidly drops to near atmospheric.

Since the crank chamber acts as a pump it must be made and maintained air-tight. In the three port type of engine it is necessary to place one packing ring on the piston near the lower end, so that the charge under pressure in the crank chamber will not blow back by the piston and out through the inlet port. There is also chance for leakage through the crankshaft bearings. In order

to minimize this leakage the bearings must be made of liberal size, and particularly of good length, so they will wear very slowly. Grease lubrication of the bearings tends to keep the charge in, but is not very suitable for automobile work. Force feed of oil to the bearings is the next best thing. Some manufacturers provide the end bearings with packing on the outer ends.

In a multicylinder two cycle motor the crank chamber of each cylinder must be separate, in order that it may act as a charge pump.

Transfer Passage and Deflector—From the crank chamber the charge must be transferred to the cylinder while the piston is at and near the lower end of its stroke. Sometimes the transfer passage extends down the side of the cylinder and through the top portion of the crank chamber, as seen in Figs. 284-286. However, certain designers prefer to shorten the passage by terminating it below in a port in the cylinder wall with which registers a port in the piston wall when the piston is at the bottom end of its stroke. (See Fig. 290.)

The cross section of the transfer passage should be at least equal to that of the transfer port. All of the three ports extend over 80 to 85 degrees of the cylinder circumference, but their effective width is reduced by a bridge at the middle about ⅜ inch wide. This bridge is necessary in order to prevent the piston rings from springing out and being caught by the edges of the port. The bridge in the exhaust port naturally becomes very hot and in cylinders of considerable size it is customary to make it hollow and cool it by either water or air circulation.

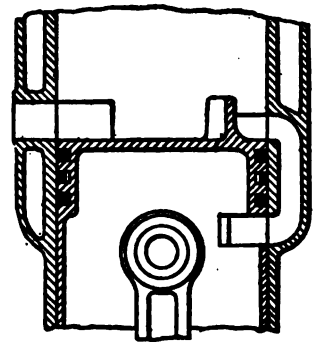

FIG. 290.—TRANSFER PORT IN PISTON WALL.

It is a good plan to insert a wire screen in the transfer passage or place it against the opening of same into the crank chamber, so as to prevent explosions in the crank chamber. When the charge admitted to the cylinder is low in gasoline it burns very slowly and is still burning when the transfer port is opened. The new charge arriving from the crank chamber is then easily ignited, resulting in an explosion in the crank chamber whereby the three or four following explosions are missed. The same thing occurs when the spark is set late. This can be prevented by

placing a wire gauze screen of sufficiently fine mesh across the transfer passage, which, on the familiar principle of the miner's lamp, will prevent the flame from passing through it. The screen, of course, must be sufficiently rigidly secured so as to withstand the forces acting upon it, and it must be of such large area as not to throttle the charge.

In order to prevent the fresh charge from mingling with the spent gases a deflector plate is usually formed on the piston head. The form of this deflector differs considerably in different engines. Its height is generally limited by the height of the compression space. Sometimes, in order to increase the permissible height, the piston head is made of irregular shape, as shown at *A* in Fig. 291.

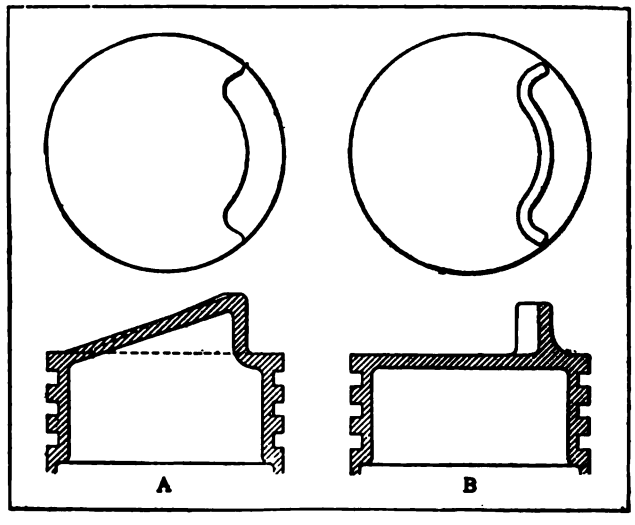

FIG. 291.—DEFLECTORS.

the deflector forming part of the piston head wall. The distance of the deflector plate from the cylinder wall is generally slightly greater than the height of the transfer port. The central part of the deflector generally forms an arc of a circle concentric with the cylinder, while the ends swing around toward the cylinder wall, as shown at *B* in Fig. 291. It is well to provide a liberal fillet where the deflector joins the piston, so no eddies will be produced in the corner and interfere with the rapid flow of the charge.

Port Sizes—The operation of a two cycle motor depends very largely upon the dimensions and location of the different

ports. The ports must be located very accurately in the casting, for the reason that once the motor is completed it is impossible to make any adjustments, as is possible in a four cycle motor, for instance. The dependence of the port width and height upon the bore and stroke of the motor is a matter of great importance.

If we take two motors with cylinders of different dimensions, intended for the same speed of revolution, then the capacities for passing gas of corresponding ports should evidently be proportional to the cylinder volumes. However, as already found in connection with four cycle motors, if the stroke varies the speed of revolution will vary. It is logical to assume that, the same as in a four cycle motor, the speed of rotation will vary inversely as the square root of the length of stroke. The port capacity must, of course, increase directly with the speed of rotation. Then, denoting the port capacity by Q, we may write

$$Q \sim \frac{\pi}{4} b^2 l \times \sqrt{\frac{1}{l}} \sim b^2 \sqrt{l} \quad \text{.....(99)}$$

An analysis of a number of successful two cycle motors shows that the average value of the transfer port capacity is

$$Q_t = 2 b^2 \sqrt{l} \textit{ square inch-degrees} \quad \text{.....(100)}$$

and the average value of the exhaust port capacity

$$Q_e = 3.3 b^2 \sqrt{l} \textit{ square inch-degrees} \quad \text{.....(101)}$$

Calculation of Port Capacity—Referring to Fig. 292, it will be seen that the distance o by which the port is opened may be expressed by the equation

$$o = h - (l - x) = h + x - l.$$

Inserting the value of x found in equation (20)—

$$o = h + \frac{l}{2} - \frac{l}{2} \cos\theta + \frac{l}{8n} \sin^2\theta - l = h - \frac{l}{2} - \frac{l}{2} \cos\theta + \frac{l}{8n} \sin^2\theta$$

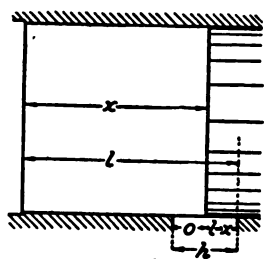

FIG. 292.

In Fig. 293 is shown a co-ordinate diagram in which the abscissas represent crank angles and the ordinates length of port opening. Let $d\theta$ represent any small increment of the crank angle and o the corresponding length of opening of the port. Then the product $o\ d\theta$ represents the area of the narrow strip of width $d\theta$ and height o. The total area enclosed by the port opening curve and the horizontal axis may be called the port opening integral, and be denoted by I. Inserting the value of o in the

expression for the area of the narrow strip, we have

$$o\,d\theta = h\,d\theta - \frac{l}{2}\,d\theta - \frac{l}{2}\cos\theta\,d\theta + \frac{l}{8n}\sin^2\theta\,d\theta.$$

In order to find the area of the entire diagram we have to integrate this expression between the limits θ_1 and θ_2:

$$\int_{\theta_2}^{\theta_1} h\,d\theta - \frac{l}{2}\,d\theta - \frac{l}{2}\cos\theta\,d\theta + \frac{l}{8n}\sin^2\theta\,d\theta =$$

$$\left(h - \frac{l}{2}\right)\left(\theta_2 - \theta_1\right) - \frac{l}{2}\left(\sin\theta_2 - \sin\theta_1\right)$$

$$+ \frac{l}{16n}\left(\theta_2 - \theta_1 - \sin\theta_2\cos\theta_2 + \sin\theta_1\cos\theta_1\right) \ldots\ldots\ldots (102)$$

In applying this equation the angles θ_1 and θ_2 must be expressed in radians and the result will be in inch-radians. To change it to inch-degrees it is only necessary to multiply by $\frac{360}{6.28}$. However, equation (102) can be materially simplified. The angles θ_1 and θ_2, of course, represent the angles of crank motion from the begin-

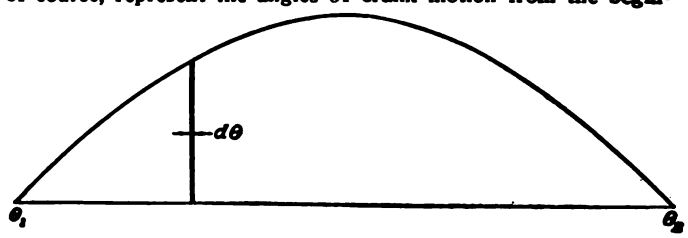

FIG. 293.

ning of the down stroke to the moments of port opening and closing, respectively. Now let a represent the angle of crank motion corresponding to the period from the beginning of port opening to full opening or the end of the down stroke. Then

$$\theta_2 - \theta_1 = 2a$$

$$\text{Sin}\ \theta_2 - \sin\theta_1 = -2\sin a$$

(remembering that θ_2 is in the third quadrant and θ_1 in the second)

$$-\sin\theta_2\cos\theta_2 + \sin\theta_1\cos\theta_1 = -2\sin a\cos a.$$

Substituting in equation (102) we have

$$I = \left(h - \frac{l}{2}\right)2a + \frac{l}{2}\left(2\sin a\right) + \frac{l}{16}n\left(2a - 2\sin a\cos a\right) =$$

$$(2h - l)\,a + l\sin a + \frac{l}{8n}(a - \sin a\cos a).$$

This equation, as already stated, gives the opening integral in inch-radians. In inch-degrees the opening integral is

$$I = \frac{360}{6.28}\left[(2h - l)\,a + l\sin a + \frac{l}{8n}(a - \sin a\cos a)\right].$$

But in order to avoid the necessity of first transforming the angular measurements from degrees into radians we may transform this equation as follows:

$$I = \frac{360}{6.28}\left(l \sin a - \frac{l}{8n} \sin a \cos a\right) - \left(l - 2h - \frac{l}{8n}\right) a$$

$$= \frac{360}{6.28} l \sin a \left(1 - \frac{1}{8n} \cos a\right) - \left(l - 2h - \frac{l}{8n}\right) a \text{ in.-degs.} \ldots\ldots (103)$$

In applying this equation the value of a in degrees must be inserted.

Equation (103) involves two dependent variables, viz., h and a. In order to make use of it, it is, therefore, necessary to first assume a value for h and then find the corresponding value of a by means of equation (49)—

$$\cos \theta = \sqrt{4n^2 + 4n + 1 - 8n\frac{x}{l}} - 2n.$$

The angle a is the supplement of angle θ, or 180 degrees $-\theta$. However, since both of these equations are rather unhandy for use, the values of a and I for a wide range of strokes and port heights have been calculated and are given in Tables VII and VIII respectively. In calculating these tables the ratio n of connecting rod length to length of stroke was assumed to be 1.8. The values given in the tables, however, are not changed much by a slight change in this ratio. The following example illustrates the use of these tables and of equations (100) and (101).

Suppose that it is required to find the proper dimensions for the transfer and exhaust ports of a 4½x5 inch two stroke engine. From equation (100) we find that the transfer port capacity should be

$$2 \times 4.5^2 \sqrt{5} = 90.6 \textit{ square inch-degrees},$$

and from equation (101) that the capacity of the exhaust port should be

$$3.3 \times 4.5^2 \sqrt{5} = 149.5 \textit{ square inch-degrees}.$$

Now, in order to get the proper timing the transfer opening should extend over a little less than 90 degrees of crank motion (say $a = 43$ degrees), and the exhaust opening over about 115 degrees of crank motion ($a = 57.5$ degrees). By referring to Table VII we see that with a stroke of 5 inches a port height of ½ inch gives for a a value of 42½ degrees and a port height of ⅞ inch, a value of 56 degrees 26 minutes. We will adopt these values. By now referring to Table VIII we see that the port opening integral for 5 inch stroke and

TABLE VII—PORT OPENING HALF-PERIODS.

Port Height. \ Stroke.	6 Inches.	5¾ Inches.	5½ Inches.	5¼ Inches.	5 Inches.	4¾ Inches.	4½ Inches.	4¼ Inches.	4 Inches.
	Degrees of Crank Motion.								
1¼ inches	61°-38′	.....	.....	.....	.....	.....	.....	.....	.....
1 3-16 inches	60°-0′	.....	.....	.....	.....	.....	.....	.....	.....
1⅛ inches	58°-24′	59°-40′	61°-46′	62°-29′	.....	.....	.....	.....	.....
1 1-16 inches	57°-19′	57°-59′	59°-20′	60°-43′	.....	.....	.....	.....	.....
1 inch	54°-58′	56°-17′	57°-31′	58°-48′	60°-16′	61°-54′	63°-38′	.....	.....
15-16 inch	53°-16′	54°-24′	55°-40′	56°-54′	58°-20′	59°-52′	61°-34′	.....	.....
⅞ inch	51°-23′	52°-29′	53°-42′	54°-58′	56°-21′	57°-47′	59°-23′	61°-15′	63°-8′
13-16 inch	49°-32′	50°-39′	51°-50′	52°-59′	54°-16′	55°-40′	57°-15′	59°-0′	60°-51′
¾ inch	47°-32′	48°-37′	49°-40′	50°-52′	52°-7′	53°-29′	54°-58′	56°-42′	58°-24′
11-16 inch	45°-34′	46°-31′	47°-37′	48°-47′	49°-54′	51°-10′	52°-37′	54°-16′	55°-49′
⅝ inch	43°-27′	44°-26′	45°-24′	46°-22′	47°-37′	49°-32′	50°-12′	51°-41′	53°-16′
9-16 inch	41°-14′	42°-6′	43°-2′	44°-1′	45°-10′	46°-17′	47°-37′	49°-0′	50°-29′
½ inch	38°-50′	39°-39′	40°-37′	41°-33′	42°-31′	43°-37′	44°-49′	46°-18′	47°-37′
7-16 inch	.....	.....	.....	.....	.....	40°-42′	42°-0′	43°-12′	43°-2′
⅜ inch	.....	.....	.....	.....	.....	37°-43′	38°-50′	40°-0′	41°-16′

½ inch height of port is 28.5 inch-degrees, and for 5 inch stroke and ⅞ inch height of port, 65.1 inch-degrees. By dividing the necessary port capacity found above by these values for the port integral, we get the required circumferential width of the ports. For the transfer port

$$w_t = \frac{90.6}{28.5} = 3.18 \textit{ inches},$$

and for the exhaust port

$$w_t = \frac{149.5}{65.1} = 2.3 \textit{ inches}.$$

As used for marine purposes the two stroke motor is provided with ports much smaller than those here calculated, but marine two cycle motors will run only at comparatively low speed and furnish only a small output in proportion to their cylinder dimensions. To adapt this motor to high speed operation for use on automobiles the ports had to be enlarged. This, of course, involved some disadvantages. The effective stroke is reduced by the height of the exhaust port, and the greater this height the shorter the effective stroke. Moreover, when the ports are very high, it is impossible to prevent some of the fresh charge from escaping through the

TABLE VIII—PORT OPENING INTEGRALS.

Stroke.	6 Ins.	5¾ Ins.	5½ Ins.	5¼ Ins.	5 Ins.	4¾ Ins.	4½ Ins.	4¼ Ins.	4 Ins.
ort Height.	Inch-Degrees.								
1¼ inches....	101.5	....	....	....	....	....	....	....	....
1 3-16 inches..	93.7	95.9	98	....	....	....	....	....	....
1⅛ inches....	86.4	88.3	90.8	92.4	94.5	....	....	....	....
1 1-16 inches..	80.3	81.7	83.4	85.3	87.5	90	92.7	....	....
1 inch.....	73.4	75	76.7	78.4	80.4	82.8	85.6	87.5	89.9
15-16 inch....	66.8	68.1	69.6	71.3	73.2	75.1	77.1	79.2	81.6
⅞ inch.....	60	61.5	63	64.3	65.1	67.5	69	71.1	73.4
13-16 inch....	53.9	55.3	56.8	57.8	59.3	61.1	62.4	64	65.9
¾ inch.....	47.7	49.2	50.3	51.4	53.2	54.2	55.4	56.8	58.3
11-16 inch....	41.9	43.2	44.3	45.4	46.4	48.1	49.2	50.3	51.4
⅝ inch.....	36.3	37.6	38.5	39.3	40.3	41.9	42.4	43.6	44.6
9-16 inch.....	32.1	32.1	32.9	33.6	34.5	35.4	36.5	37.5	38.4
½ inch.....	....	26.9	27.2	27.8	28.5	29.3	30.4	31.3	32.2

exhaust port, whereby the fuel economy will be reduced. There is, therefore, a limit to the practical size of the ports, and this limit is supposed to be given by equations (100) and (101).

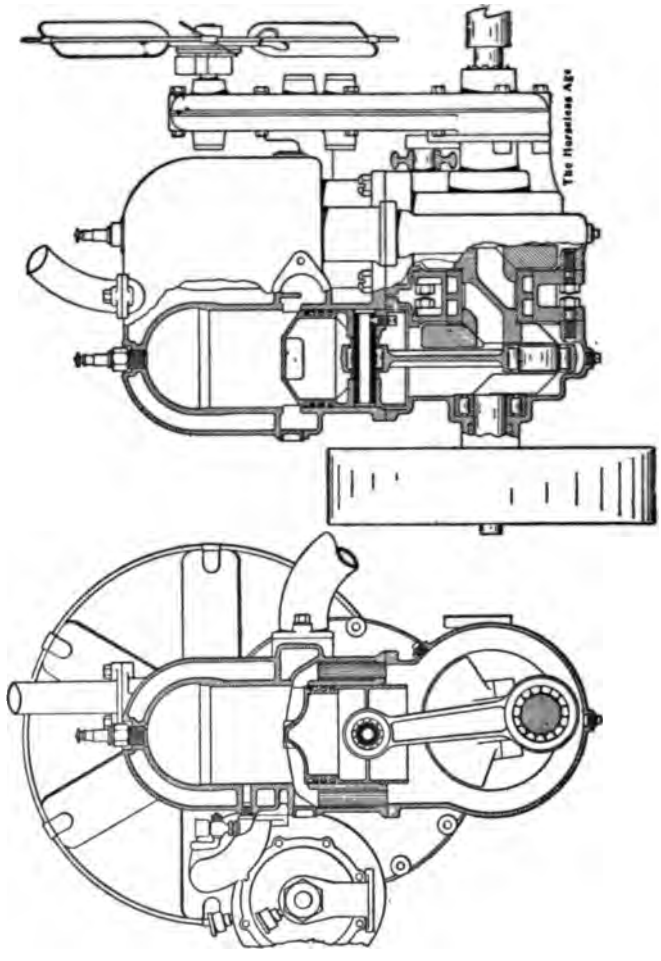

FIG. 294.—ATLAS TWO CYLINDER, TWO STROKE MOTOR, WITH SYMMETRICALLY ARRANGED PORTS.

It was stated above that for a given speed of revolution the capacity of the ports to pass charge should be proportional to the cylinder volume, and in the calculation of the port capacity it was assumed that this capacity for passing

charge is proportional to the area of the port. This assumption is probably not absolutely correct. According to works on hydraulics, the discharge from an orifice in the wall of a vessel is proportional to the area, while the discharge through a pipe of considerable length is proportional to the 2.5th power of the diameter, hence, varies slightly faster than the cross sectional area of the pipe. The transfer and exhaust passages present cases intermediate between those of orifices and pipes, and it might, therefore, appear that the capacity for passing charge would increase slightly faster than the area. However, when it is considered that in a motor the flow is periodically started and stopped, and that, consequently, the quantity of charge passed depends to some extent upon the inertia of the gas, and, besides, that the length of the passages generally increases with the cylinder dimensions, it will be seen that the assumption that the quantity of gas passed in a given time is proportional to the port area must be very near the truth. Ports dimensioned according to equations (100) and (101) give a constant gas velocity in cylinders of all dimensions, if the degree of filling or the volumetric efficiency remains constant.

It should be pointed out that up to now considerable difficulty has been experienced by manufacturers who have succeeded in properly working out an engine of one particular size in determining the proper sizes of ports for an engine of different cylinder dimensions, especially if the ratio between the length of stroke and piston head area was different. For this reason most manufacturers of three port, two stroke automobile motors have adhered closely to two sizes of cylinders, viz., 4x4½ inch and 4½x5 inch.

The ports should be finished by means of a milling cutter of small diameter, which is run right through them, so as to get them of the correct width and at the correct distance from the bottom face of the cylinder casting.

There is one disadvantage in the usual arrangement of the ports, as illustrated in Figs. 284-286, and that is that the greater heating of the cylinder wall on the exhaust port side tends to distort the cylinder. Some manufacturers recently have sought to overcome this defect by providing two oppositely located transfer ports and two exhaust ports intermediate between the transfer ports. While this overcomes the trouble due to unequal expansion, it reduces the distance between transfer and exhaust ports, and therefore increases the liability of leakage between these ports. (See Fig. 294.)

Carburetors and Throttling—Owing to the fact that the suction in a three port, two stroke motor, lasts less than half as long as in a four stroke motor, it is proportionately stronger. For this reason a carburetor adjusted for a four stroke motor generally does not give very satisfactory results on a three port, two stroke motor. It has been found that if a carburetor of the supplementary air valve type is to be used on the latter type of motor, the primary air inlet around the fuel jet must be made very small, or there is likelihood of flooding at low speed.

The throttle valve can be placed either in the transfer port or in the inlet pipe at the carburetor. From a manufacturing standpoint the latter location is preferable, and if the carburetor is properly designed and adjusted it is equally satisfactory. One important difference between the two stroke and four stroke motors is that when the two stroke motor is throttled its compression is not reduced. The combustion chamber at the beginning of the compression stroke is always filled substantially to atmospheric pressure, and since less new charge is allowed to enter, more spent gases remain. This, of course, results in a dilution of the charge and renders ignition more difficult. The location of the ignition terminals is for this reason of greatest importance. If the spark plug is placed in the side wall of the cylinder directly above the transfer port it is most certain to be surrounded by fresh charge under all conditions, but unfortunately its points are also directly exposed to any oil globules carried along by the incoming charge, for which reason some makers prefer to place the plug in the centre of the cylinder head.

Four Cycling—When a two stroke motor of ordinary construction is throttled down much it usually begins to miss, which is due to excessive dilution of the charge. Sometimes throttling gives rise to a phenomenon known as "four cycling." That is, the engine will miss every second charge. This phenomenon is not difficult to explain. Evidently, when a charge is missed it contains too large a proportion of dead gas. During the next transfer period a new charge enters, which, instead of being mixed with dead gas, is mixed with a diluted charge, and this new charge, therefore, is not diluted so much that it is not inflammable. The following charge, however, is again mixed with dead gas, and therefore fails to explode.

Lubrication—In two stroke motors with crank case compression it is impractical to employ splash lubrication, since

a great deal of the lubricant would then pass with the charge into the combustion chamber and would cause a smoky exhaust, besides waste of oil. Many two cycle motor manufacturers therefore lubricate their cylinders by either mixing lubricant with the gasoline or feeding it to the inlet pipe just beyond the carburetor. When mixing the oil with the gasoline about one quart of oil is used for every five gallons of fuel. The crankshaft journals may be lubricated by means of a mechanical oiler, and arrangements may be made for conducting the overflow from these bearings to the crank pin bearings. Some manufacturers provide a wick oil feed for the crank pin bearing, the wick rubbing against the crank chamber wall and collecting the oil which precipitates on the wall from the fuel charge. One point to be observed in engines with crank case compression is that the oil grooves in the crankshaft bearings must not be brought too close to the outer ends of the bearings, or the oil will be blown out through the bearings by the compression. These bearings are generally babbitt lined, the babbitt being cast directly into the bearing hubs, and the bearings then reamed.

Differential Pistons—In order to avoid the difficulties inherent in crank case precompression, differential pistons have lately been used to quite an extent. It may be pointed out at once that this construction is applicable only in the case of engines with an even number of cylinders. By referring to Fig. 295, which shows an engine of this type, it will be seen that the cylinder is made with a small bore at the top end and a larger bore at the lower end. The piston is also made with a double diameter, the small diameter portion on top fitting the small bore of the cylinder and the larger diameter lower portion fitting the bigger bore. The regular working cycle takes place in the upper end of the cylinder above the piston head. An annular space is formed between that portion of the cylinder wall which is bored to the larger diameter, the small diameter portion of the piston and the shoulders or offsets in the piston and cylinder walls, respectively. As the piston moves down the combustible charge is drawn into this annular space, either through a suction operated poppet valve or a port in the cylinder or piston wall. If the port is in the piston wall the charge must naturally pass through the crank chamber. Upon the return stroke of the piston the valve or port closes and the charge is compressed in the annular space to a relatively high pressure. The ports would be so proportioned that at the mo-

ment the transfer port is opened the distance of the offset in the piston from the offset in the cylinder is equal to about one-quarter the length of stroke. When the piston approaches the end of its up-stroke the annular space is placed in communication with the upper end of another cylinder in which the piston is at that moment approaching the end of its down-stroke, and which is, therefore, ready to receive a new charge. This method of construction is par-

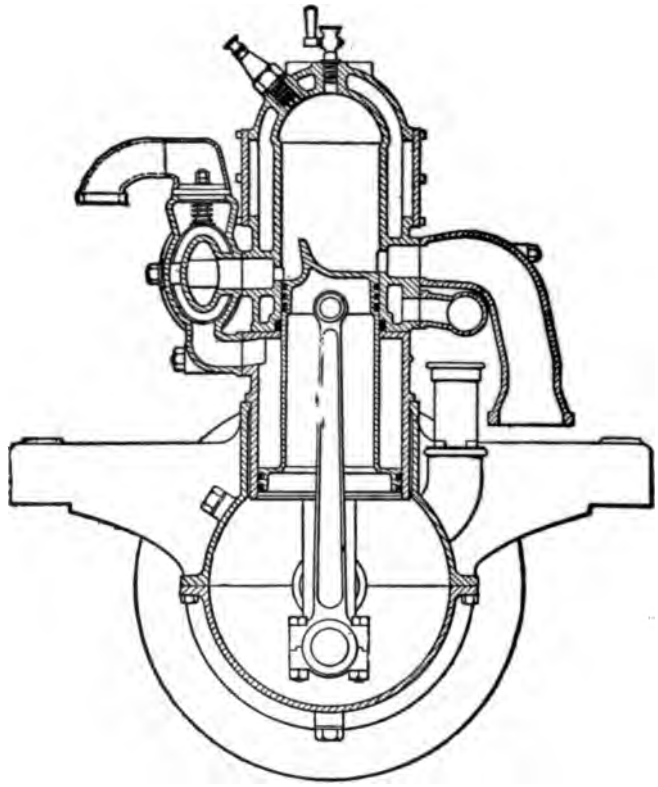

FIG. 295.—COTE DIFFERENTIAL PISTON, TWO STROKE MOTOR.

ticularly applicable to double cylinder motors. In these the two cranks are set at 180 degrees, and one piston is at the top end of the stroke while the other is at the bottom end. The port in the wall of the annular chamber of one cylinder communicates through a passage with the working

end of the other cylinder, and when the transfer port of the latter cylinder is uncovered by its piston the charge from the annular compression space is transferred to the working end of the other cylinder. One method of thus cross-connecting the compression and combustion chambers of two cylinders is illustrated in Fig. 296.

The displacement in the annular space would generally be made a little greater than the displacement in the working end of the cylinder, with the object of getting more charge into the cylinder during each revolution. For instance, with a bore of 4 inches for the working end of the cylinder, the bore of the annular space would be made 6 inches, which gives an increased displacement of about 25 per cent.

One objection to the differential piston construction is that with a normal length of stroke it gives a rather high engine,

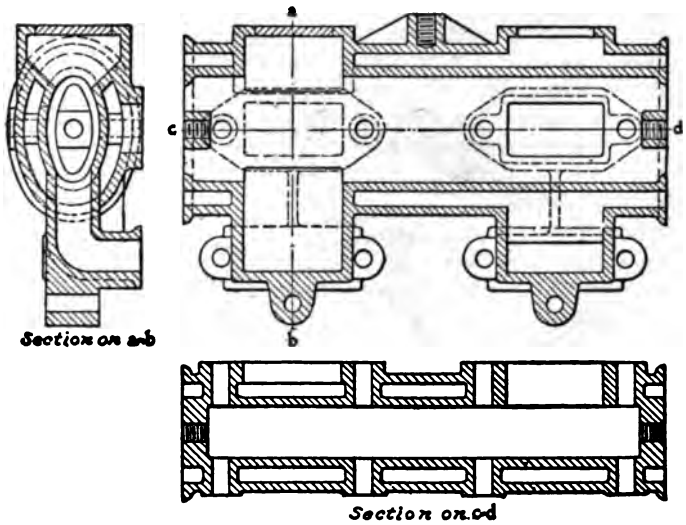

FIG. 296.—TRANSFER PASSAGE OF COTE MOTOR.

which calls for a high, unsightly bonnet and raises the centre of gravity. Another disadvantageous feature is that the reciprocating parts are of necessity quite heavy and make high speeds impractical. With these pistons the problem also arises as to where to place the piston pin. If it is placed about midway of the length of the piston (which would be the best location from the standpoint of pressure distribution), there might be leakage from the annular chamber to

the crank chamber around the ends of the piston pin. For this reason some manufacturers place the piston pin in the top bearing portion of the piston, others in the bottom bearing portion, and still others pin below the top ring covered portion, so that it is uncovered only when the piston is near the bottom of its stroke, when the pressure in the annular space is near atmospheric.

Four Cylinder, Two Stroke Motors—In earlier years two stroke motors for automobiles were built only in single and double cylinder models, but owing to the general preference for four cylinder construction, quite a number of four cylinder, two stroke motors have been built since. In these it is customary to place the two cranks for each end pair of cylinders at 180 degrees, and the two sets of cranks at 90 degrees with each other. This causes the explosions to occur at equal intervals, but does not result in an inherent balance of the crankshaft, and balancing weights should preferably be used. Two carburetors are generally used with this type of motor, one with each end pair of cylinders. Such a motor naturally produces a very uniform turning moment. Since the exhausts in a four cylinder motor overlap considerably, a separate exhaust pipe has to be provided for each pair of cylinders.

Distributor Valve Motor—In some of the more recent two cycle automobile motors rotary valves are used in conjunction with the double diameter cylinders. One of the earliest motors of this type is the Legros, made in France, which is illustrated in Fig. 297. In this engine there is a stationary piston *A* inside the regular working piston *B*, and the charge is compressed between the stationary and movable piston *B*. The stationary piston is cast with a passage *C* leading to the distributing valve chamber. This valve *D* establishes communication either between the carburetor and the passage *C* in the fixed piston or between the compression chamber *E* and the passage *C*. Suppose the movable piston to start from the top end of the stroke under the force of an explosion. As it approaches the bottom end of the stroke the spent gases will be discharged through the exhaust port, and a moment later a new charge will enter the working cylinder from the compression chamber *E* through the transfer port. During the following up-stroke of the piston the new charge will be compressed in the working cylinder. At the same time the space between the movable and stationary pistons is in communication with the

carburetor through the rotary valve *D*, and a charge is drawn into this space. As the piston reaches the upper end of its stroke the rotary valve closes the passage to the carburetor and instead places the passage in the stationary piston in communication with the compression chamber *E* in which the charge is compressed during the down-stroke of the

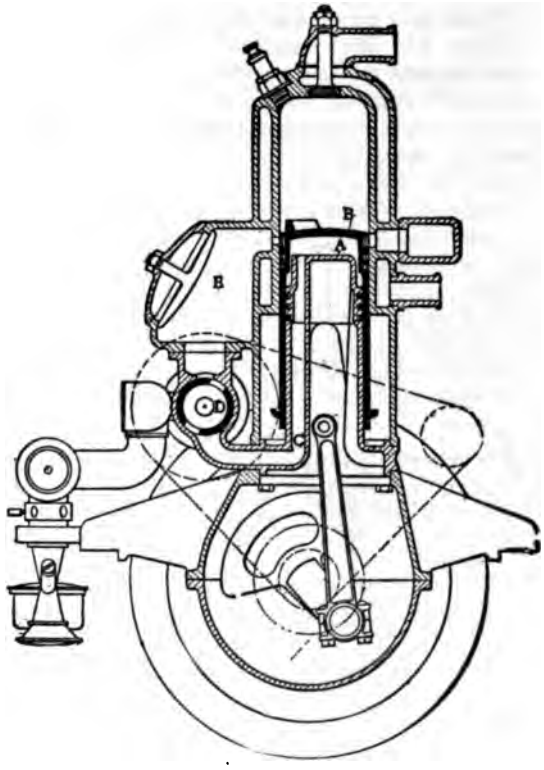

FIG. 297.—LEGROS TWO STROKE MOTOR.

movable piston. From this compression chamber, as already explained, the charge passes into the working cylinder upon the opening of the transfer port. In this construction, too, the connection of the connecting rod with the piston does not seem to be entirely satisfactory, as it is at the extreme lower end of the piston, so that the side thrust pressure is very unevenly distributed.

In the Elmore High Duty engine, which is best known in this country, a rotary valve is used which places the annular compression space alternately in communication with the carburetor and the transfer port of an adjacent cylinder. Referring to Fig. 298, the incoming gas is drawn into the annular chamber *D* during the entire downward stroke of the piston. The gas passes from the carburetor through the manifold *A* into the distributor valve *E*, thence through the distributor port and inlet passage *C*, and fills the annular chamber *D* around the piston below the firing chamber. During the following up stroke of the piston the gas in chamber *D* is compressed and is forced through the transfer

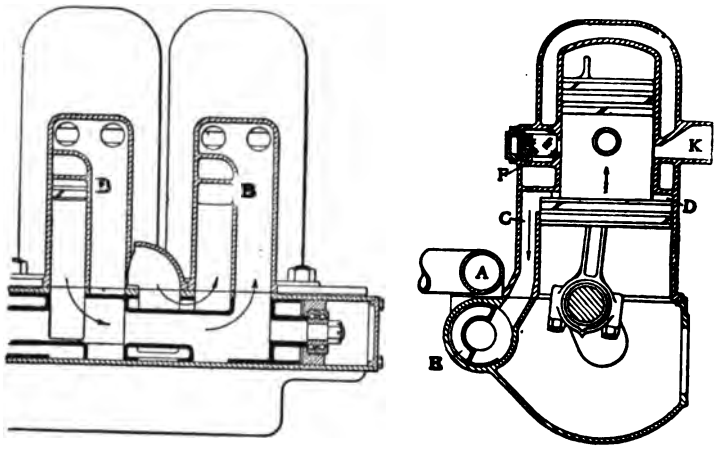

FIG. 298.—ELMORE HIGH DUTY, TWO STROKE MOTOR.

passage into the distributor valve, which has now changed its position to admit the new gas; thence it flows through transfer port *F* into the combustion chamber of the adjacent cylinder.

Horse Power Output—As in the case of four stroke motors, it is impossible to give a satisfactory formula for the output of two stroke motors. As a rule, the two stroke motor gives its maximum output at a lower piston speed than the four stroke motor, and its mean effective pressure is also somewhat less. But since there are relatively twice the number of explosions in a two stroke motor, the latter may give a greater power output for the same cylinder dimensions. A two cylinder, three port 4x5 inch engine

tested at the University of Michigan gave a maximum output of 13.5 horse power at 930 r. p. m. E. W. Roberts, in a paper read before the mechanical branch of the Association of Licensed Automobile Manufacturers at New York in July, 1908, stated that he had obtained 20 horse power from a two cylinder motor of these dimensions. From a single cylinder 3¼x3¼ three port engine Dr. Watson obtained a maximum of 4¼ horse power at 1,500 r. p. m. The power of two French motors is given in the following paragraph.

Tests of Two Stroke Motors—A contest for two stroke motors was conducted by the Automobile Club of France during October and November, 1907. Seven different motors were submitted for the tests, but only two met all of the conditions. The test comprised a six hour run at full load, a three hour run at half load, and a three hour run at no load. The results of these tests are of considerable interest, and are here recapitulated.

The motor which secured first place was a Tony Huber-Peugeot single cylinder of 110 mm. bore by 140 mm. stroke. In this motor the charge is precompressed between the piston and a sliding plate between the bottom of the cylinder and the top of the crank case, with a stuffing box bearing for a connecting rod to slide in. The charge is drawn into this compression chamber through a suction operated poppet valve and is transferred to the combustion chamber through a transfer passage and port in the cylinder wall which is opened by the piston toward the end of its down stroke.

The second motor was the Legros, illustrated in Fig. 297. This was a two cylinder motor of 100 mm. bore and 120 mm. stroke. The test results are given in the following table:

TWO STROKE MOTOR TESTS.

Motor.	Peugeot.	Legros.
Number of cylinders	1	2
Cylinder bore, mm	110	100
Piston stroke, mm	140	120

FULL LOAD TESTS.

Average speed, r. p. m	1,401.3	967.5
Average power, h. p	12.86	12.25
Total consumption in gallons per hour	1.91	2.29
Consumption in pounds per horse power hour	0.75	1.07
Weight of motor, pounds	163.4	360.8
Weight p. h. p., pounds	12.7	29.5

HALF LOAD TESTS.

Motor.	Peugeot.	Legros.
Average speed, r. p. m.	1,427.6	921.25
Average power, h. p.	6.40	5.40
Total consumption per hour, gallons	1.65	1.53
Consumption per horse power hour, pounds	1.49	1.6

NO LOAD TESTS.

Average speed, r. p. m.	900	920
Total consumption per hour, gallons	1.09	1.45

The piston speeds at maximum output were 1,300 feet per minute in the case of the Peugeot, and 930 feet per minute in the case of the Legros motor. The corresponding products of the mean effective pressures and mechanical efficiencies ($\eta\ p$) were 41.5 and 35 pounds per square inch, respectively.

A very complete series of tests of an ordinary two stroke motor was made by Dr. W. Watson, of London, and reported by him in a paper read before the Institution of Automobile Engineers. The engine was a single cylinder one with a bore and stroke of 3¼ inches each. It employed crank case compression and was of the three port type. The crank case inlet port remained open during 82 degrees of crank travel, the transfer port during 97 degrees, and the exhaust port during 122 degrees. This engine at 1,506 r. p. m. developed 4.16 brake horse power, with a fuel consumption of 0.76 pound of gasoline per indicated horse power-hour. The mean effective pressure at 1,500 r. p. m. was 53 pounds per square inch. At 900 r. p. m. it was 65 pounds per square inch. The ratio of air to gasoline at this speed was 12.13 to 1, and 17 per cent. of the charge supplied to the cylinder escaped through the exhaust valve. The loss of charge was much greater at low speeds. The compression in this motor was between 62 and 65 pounds per square inch at all speeds.

Air Cooling—Air cooling undoubtedly involves greater difficulties when applied to a two stroke motor than when applied to a four stroke motor, owing to the fact that the interval between successive explosions is so much shorter in the former. Besides this, there is liability of trouble from distortion of the cylinders, due to the fact that the exhaust side will get hotter than the inlet side, and it is impossible to so distribute the cooling effect that the temperature shall be fairly uniform all around the cylinder. Notwithstanding these difficulties, the problem was satisfactorily solved, as is shown by the fact that one manufacturer, the Chase Motor Truck Co., of Syracuse, N. Y., built three-cylinder, air cooled, two stroke motors for automobile work for several years.

A cross sectional view of one of these motors is shown in Fig. 299. This motor is of the three port type and has a bore and stroke of 4⅛ inches each. It will be noticed that the cylinders are placed a considerable distance apart, evidently to minimize the cross radiation effect. Both the cylinder and the cylinder head are covered with high cooling

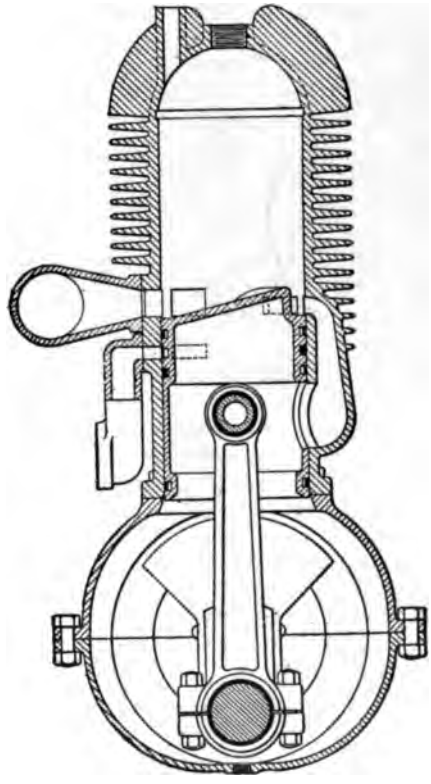

FIG. 299.—CHASE AIR COOLED TWO STROKE MOTOR.

flanges, and a current of air is drawn over the cylinders by means of a flywheel fan.

Constructional Details—In a two stroke motor it is absolutely necessary to pin the piston rings, for the reason that if the rings were free and should turn in their grooves so the cut came opposite one of the ports, the ring would be caught by the edge of the port and broken. In order to

prevent trouble from portions of the ring being caught in the ports, it is advisable to limit each section of the port to an arc of 35 degrees. The presence of the ports makes the finishing of a two stroke cylinder a particularly delicate job, and grinding is by far the best finishing method. If crank case compression is employed some care must be given in the design to insuring absolute gas tightness at all points of the case. The separate parts of the case are put together with paper gaskets between, which are glued to one of the parts with shellac. Some manufacturers, however, prefer to grind the abutting surfaces on a surface plate, and thus do away with the necessity of packing material, which is always more or less bothersome when repairs become necessary. This method is particularly applicable where the crank case is made in halves with a joint in the horizontal plane through the crankshaft axis. The bolts for holding the two parts together and for securing the cylinders to the crank chamber should be placed somewhat closer than is customary in four stroke motors.

CHAPTER XX

WATER COOLING

The heat absorbed by the jacket water from the burning charge must be transferred to the atmosphere as quickly as it is taken up. To this end the jacket water is circulated through a radiator which generally is located forward of the engine, where, when the car is in motion, it receives the full benefit of the draft created by that motion, but which in a few cases is located back of the engine in the position usually occupied by the cowl, the advantage of this latter arrangement being that it gives better access to the engine. The cooling water must be kept in constant circulation. This circulation can be induced either by means of a pump or by so arranging the circuit that the expansion of the water by the heat absorbed in the jacket and its consequent tendency to rise causes it to circulate with sufficient rapidity. The first system, known as the positive or pump circulation system, is in most extensive use, and on large cars is almost universal. The other, known as the natural or thermo-siphon system of circulation, is, however, also used to quite an extent, particularly on the smaller and cheaper cars. Of 190 pleasure car models on the American market in 1916, 70 had thermo-siphon circulation and the rest pump circulation. In England, according to the latest tabulations, thermo-siphon circulation is ahead of pump circulation. Besides dispensing with the pump, and, therefore, obviating the troubles caused by accidents to the latter, the thermo-siphon system has the advantages of varying the rate of circulation in proportion to the temperature of the cylinder wall and of maintaining circulation for a considerable time after the engine has been stopped, thereby reducing the liability of the radiator to freeze in cold weather.

Heat Absorbed by Jacket.—According to numerous tests the proportion of the total heat in the fuel consumed absorbed by the jacket water at full load amounts on an average to

about 32 per cent. in the case of poppet valve motors of the L and T head types. The thermal efficiency amounts to about 20 per cent., hence the amount of heat absorbed by the jacket water is equal to about 160 per cent. of the thermal equivalent of the full load output of the engine. It is obvious that these figures can be only approximate, because both the thermal efficiency and the jacket losses vary with details of design. If the engine is of the valve-in-the-head type and has a nearly spherical combustion chamber, the jacket losses are materially lower than if the engine is of the L or T head type, and especially if in the latter the exhaust manifold is cast integral with the cylinder block and water cooled, because—assuming given cylinder dimensions—the area of wall surface exposed to the flame and hot gases is much smaller in the former case than in the latter. We may take the figure of 32 per cent. as representing the average full load jacket loss in L and T head motors with separate exhaust manifold, and use a somewhat higher figure, say 40 per cent., where the exhaust manifold is water-cooled, and a lower one, say 28 per cent., in the case of a valve-in-the-head motor with separate exhaust pipe. In the Knight sleeve valve motor the percentage of jacket loss is only about 25. This is due to two causes—that the combustion chamber approaches the ideal spherical form and that the cylindrical portion of the cylinder wall is separated from the flame by two sleeves. These latter, of course, interpose some resistance to the flow of heat from the flame to the cylinder wall, but it is mainly the oil films between the two sleeves and between the outer sleeve and the cylinder wall that retard the flow of heat.

Calculating Jacket Heat.—In calculating the amount of fuel consumed we may either start with the maximum horsepower developed by the engine and allow a fuel consumption of 0.67 lb. per horsepower-hour (which corresponds to a thermal efficiency of 20 per cent.), or we may start with the piston displacement and the speed of maximum output, assuming a volumetric efficiency of 70 per cent. for that speed and a fuel mixture ratio of 16:1, which gives substantially the same results. Thus a four-cylinder 3½ x 5-inch motor developing 36 h.p. at 2000 r.p.m. will consume

$$36 \times 0.67 = 24.1 \text{ lbs.}$$

according to the first method of calculation, or

$$\frac{48.1 \times 2 \times 2000 \times 0.7 \times 0.08 \times 60}{1728 \times 16} = 23.4 \text{ lbs.}$$

according to the second. Figuring on a consumption of 24 lbs., and assuming a heat value of 19,000 B. T. U. per pound of fuel, and that 32 per cent. of the heat goes into the jacket, the amount of heat absorbed by the jacket water per minute is

$$\frac{24 \times 19{,}000 \times 32}{60 \times 100} = 2432 \text{ B. T. U.}$$

There are, of course, variable factors in the operation of every engine which affect the percentage of the heat going into the jacket water. Thus, for instance, late ignition and a rich mixture both cause increased heating. Such things, however, occur in the operation of every engine and must be allowed for in the factor of safety. It is also possible that in an engine with relatively small cylinders the proportional jacket loss is greater than in an engine with large cylinders, since the combustion chamber wall surface per unit of cylinder volume is greater in the former, but experimental data at hand does not clearly indicate this dependency, hence we may neglect it.

Size of Water Manifolds, Pump System.—The inlet and return water pipes can be so proportioned that 3,600 B. T. U. are disposed of per minute per square inch of pipe cross section—for pump circulation and pleasure car motors. In low speed motors, such as truck motors, where the pump action is apt to be less energetic, it is better to count on only 2,400 B. T. U. per minute per square inch of section. Making the pipe section proportional to the rate of heat dissipation may be justified as follows: The temperature of the hot water leaving the engine is limited and must be slightly below the boiling point. Similarly, the temperature of the water leaving the radiator is limited downwardly, for it must always be considerably above atmospheric temperature. Thus the possible temperature range is the same for all cars. But if the temperature range through which the cooling water passes during its circulation is fixed, then the heat transfer is directly proportional to the rate of circulation, which latter should determine the pipe size.

Form of Water Manifolds.—When not all the cylinders of the engine are cast in a single block the different water jackets are connected in parallel. The water manifold is then made of variable cross section, so that at each point the section is substantially proportional to the heat to be transferred. In Fig. 300 is shown a water return manifold for a six-cylinder engine. To the ends of the manifold that fasten to

the engine are brazed oval flanges drilled for cap screws and having their outer faces turned off rough so as to better hold the gasket. To the pump the inlet manifold is generally also connected by a flanged joint.

In the four-cylinder 3½ x 5-inch motor above considered there were 2432 B. T. U. to be disposed of per minute. Hence the cross section of the pipe carrying all of the water should be

$$\frac{2432}{3600} = 0.676 \text{ square inch}$$

and this is substantially the cross section of a pipe with an internal diameter of 15/16 inch.

Radiator Types.—There are three distinct types of radiators, viz., the plain tube (either flat or round), the gilled tube and the cellular. All radiators comprise a bottom tank and a top tank, between which is located the core which forms the radiating element. Historically, the earliest type of radi-

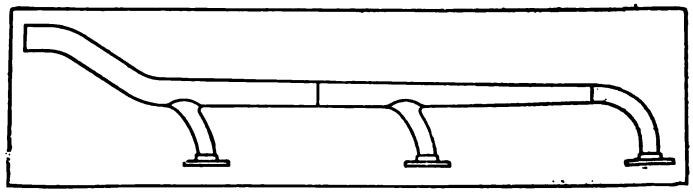

FIG 300.—WATER RETURN MANIFOLD FOR SIX CYLINDER ENGINE.

ator was of tubes usually about ¾ inch in diameter, over which were threaded thin metal discs or gills which were sometimes brought into intimate metallic contact with the tube by being dipped in solder. A coil of such pipe was used, which was connected in series with a tank, the pump and the water jackets. This construction is now obsolete.

The cellular radiator came next. In its original form it consisted of a multitude of small round tubes about four inches long, which were assembled so that adjacent tubes came within a distance of about 1/16 inch of each other and the interstices at the ends were then filled with solder. In a radiator of this type the water circulates in the spaces between tubes, while the air passes through the tubes. Square tubes were later substituted for the round tubes, by which the water capacity was greatly reduced. At first the tubes were set into a mesh of wire for spacing and then soldered, but at present the tubes are expanded at the ends so that there is a

small space between adjacent tubes except at the ends when they are placed together. Such radiators are now made of round, square and hexagonal tubes (Fig. 301) and are much used abroad on high-powered cars requiring a radiator of great capacity and of comparatively little weight. The tubes are made of ¼ inch width, or thereabouts, this having been found to give the lowest weight for a certain cooling capacity. Exceedingly thin material is used, usually less than 0.01 inch thick. The depth of a radiator or its dimension in the direction of car length is limited by the fact that with increasing

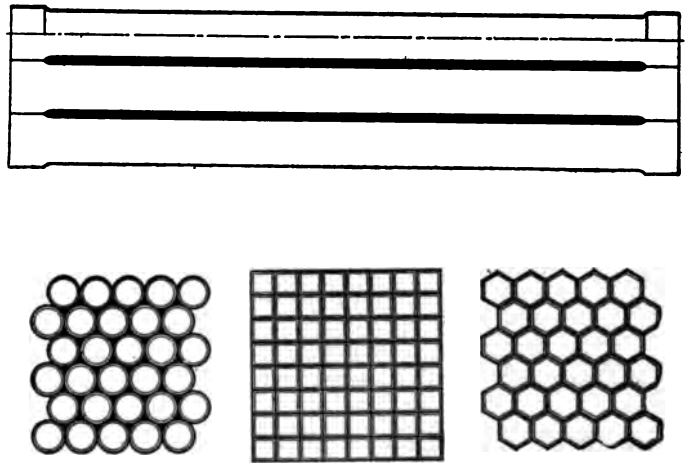

FIG. 301.—FORMS OF CELLULAR RADIATOR CORES.

depth the resistance to the passage of the air increases and when a certain depth is reached the increase in resistance to the air flow counts for more than the increase in the cooling surface. Furthermore, if we take a small section of the tube near its rear end, not so much heat is transferred there per unit surface as near the front of the tube, because the air in passing through the tube has reached a higher temperature, so that the temperature difference between water and air is less at the rear than at the front of the radiator. Increasing air resistance, however, is the chief limitation of the depth.

Capacity of Cellular Radiators.—Cellular radiators are sel-

dom of a greater depth than 4 inches. The smaller sizes are made only 3 inches deep. Such radiators contain from 10 to 12 square inches of cooling surface per cubic inch of core volume, though often the theoretical figure of 16 square inches is given (a quarter inch square tube 16 inches long has a volume of one cubic inch and has an outside surface area of 16 square inches, but the inside surface area is considerably less because of the thickness of the material and the contraction of the tube at the water spaces). Six square inches of cooling surface is required per B.T.U. to be disposed of per minute (on trucks, eight, on account of the less energetic air

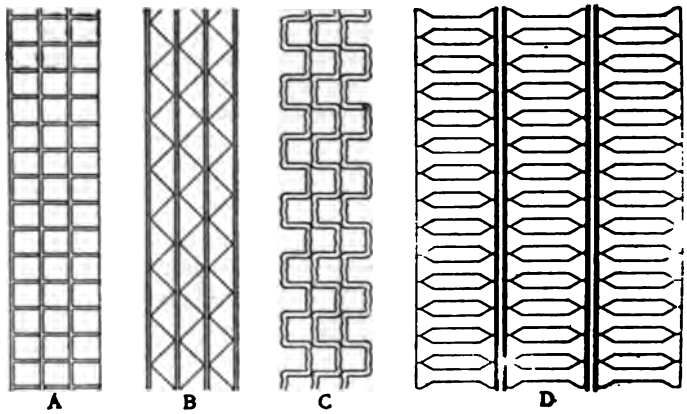

FIG. 302.—MISCELLANEOUS RADIATOR CONSTRUCTIONS.

A. McCord Design; B. Long Design; C. Livingston Design; D. Candler Design

circulation, at least in those parts of the radiator not swept by the fan). Since one horsepower equals 42.5 B.T.U. per minute it takes

$$6 \times 42.5 = 255,$$

say, 250 square inches to radiate the heat equivalent of one horsepower. If the thermal efficiency is 20 per cent. and the jacket loss 32 per cent., then the jacket loss is 1.6 times the brake horsepower and

$$1.6 \times 250 = 400 \text{ square inches}$$

of radiating surface are required per brake horsepower of the engine.

Cellular Effect Radiators.—The true cellular radiator is very expensive to manufacture and it also is rather delicate, as there is an enormous length of soldered joints in it. As a result there have been developed a number of constructions which give the same appearance as the true cellular cooler and are more or less the same in action, but are cheaper to manufacture and have a smaller length of soldered joints. Several of these are illustrated in Fig. 302. In some of them the water is forced to take a zig-zag path in flowing from the top to the bottom tank, in others it follows a straight vertical path, the horizontal members of the radiator being indirect cooling surfaces or else forming blind water passages.

Only non-corrosive metals are used for radiator tubes and tanks (with the exception of the cast iron tanks of some motor trucks), chiefly copper and brass. Copper is generally considered to be best for the purpose, because there is less chance of porosity with it.

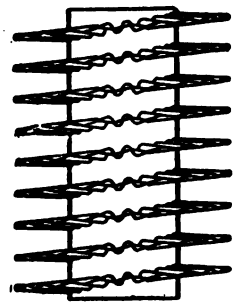

FIG. 303.—LONG SPIRAL TUBE.

Tubular Radiators.—While the old gilled tube type of radiator has passed entirely out of use, a construction of tubes with crimped spiral flanges (the Long) is employed for commercial vehicles. The crimped spiral flange is not nearly as easily bent or deformed as the ordinary flat gill or flange, even though the latter may be formed with a circular corrugation for stiffness.

Another type of radiator used quite extensively for pleasure cars is the tube and plate type. It is assembled of small vertical tubes (about ¼ inch) in transverse and longitudinal rows, over which are passed plates of thin sheet metal, which are perforated for the purpose. In the fore and aft direction the spaces between tubes are made about equal to the tube diameter, while the spaces between tubes in the transverse direction are made several times this dimension. In order to give a more finished appearance to the radiator the front edge of the plates is folded over. This also stiffens the most exposed portion of the plates and consequently lessens the danger of disfiguring it.

Tube and plate type and flanged tube type radiators require about seven square inches of surface to dispose of one B. T. U.

per minute (25% more on trucks). Both sides of the flanges and plates are to be measured.

Baffling Plates.—In the great majority of radiators the water enters the top tank at the middle of its width and leaves the bottom tank at one side—the side on which the pump is located. If no special provisions were made to prevent it, the water would undoubtedly be very unevenly distributed over the radiator, most of it flowing down the passages near the middle. However, in order to insure that the radiator operate to its highest capacity, there should be a uniform distribution of the water circulation over the whole width of the radiator. To this end a baffle plate is placed in the top tank, which de-

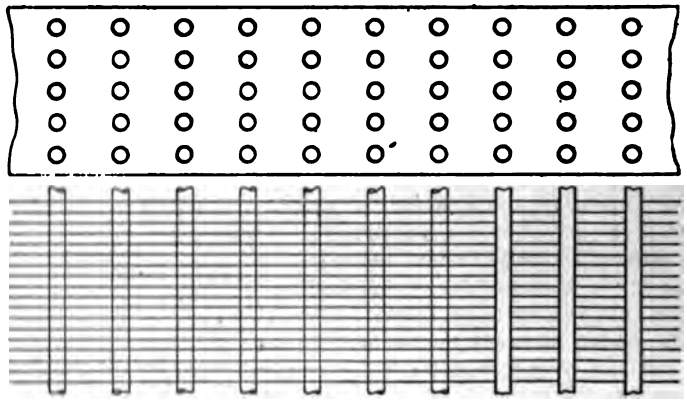

FIG. 304.—TUBE AND PLATE CONSTRUCTION.

flects some of the water to both sides, the aim in the design of the baffle being, of course, to secure even distribution of water flow. Both tanks must extend across the entire width of the radiator and owing to the fact that in pleasure cars the top outline is always rounded the top tank generally has an irregular shape. An overflow pipe passes through the wall of the top tank at the rear and extends down the rear of the radiator near one side, its upper end abutting inside the filler tube. The filler tube is closed by a brass screw cap, which is now often molded in some composition having a low heat conductivity and having its gripping edge scalloped so as to enable one to get a firm hold. On truck radiators hinged caps

are sometimes used. A fine mesh wire strainer is placed in the filler tube to keep solid matter, which might play havoc with the pump and also clog up the radiator, out of the cooling system.

Pleasure car radiator weigh on the average 0.2 lb. per cu. in. piston displacement.

Truck Radiators.—Owing to the severe strains to which a radiator is subjected on a vehicle fitted with solid rubber tires special forms of radiators have been developed for truck work. Flanged tube radiators are used to a large extent in this

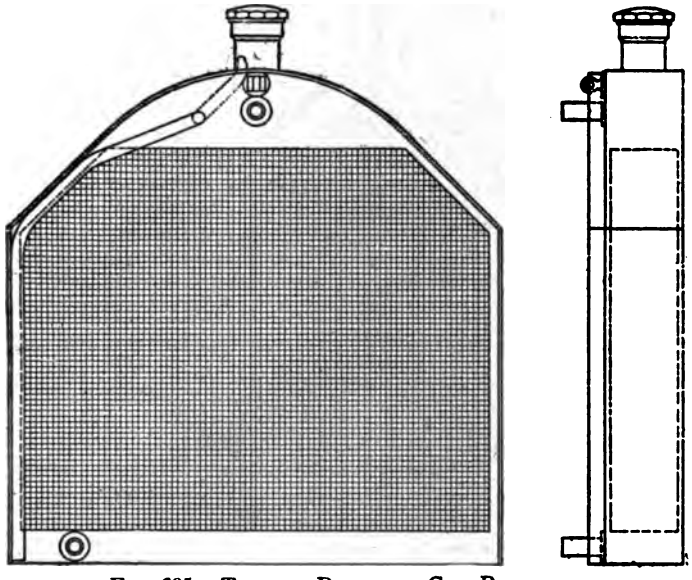

FIG. 305.—TYPICAL PLEASURE CAR RADIATOR.

service. The ends of the tubes are expanded into flanged headers and cast tanks are bolted to these headers with gaskets between. With this construction about the only place where leaks are likely to occur is where the tubes are fitted into the headers, and in case of such leaks the tank can be removed and the leak repaired Such radiators generally have a cushioned support on the truck frame or on the body. In France a small plain tube radiator for commercial vehicles has been developed, known as the Goudard-Mennesson. It consists of small bore round copper tubes extending between top and bottom tanks and curved around a central cylindrical

space occupied by a centrifugal fan. Owing to the curvature of the tubes there is little danger of leaks developing where they enter the tanks. Probably the centrifugal fan also is somewhat more efficient than the ordinary helical fan. Radiators of this type are used on some of the foreign motor buses in service in New York.

Radiator Mounting.—In pleasure car practice there are three

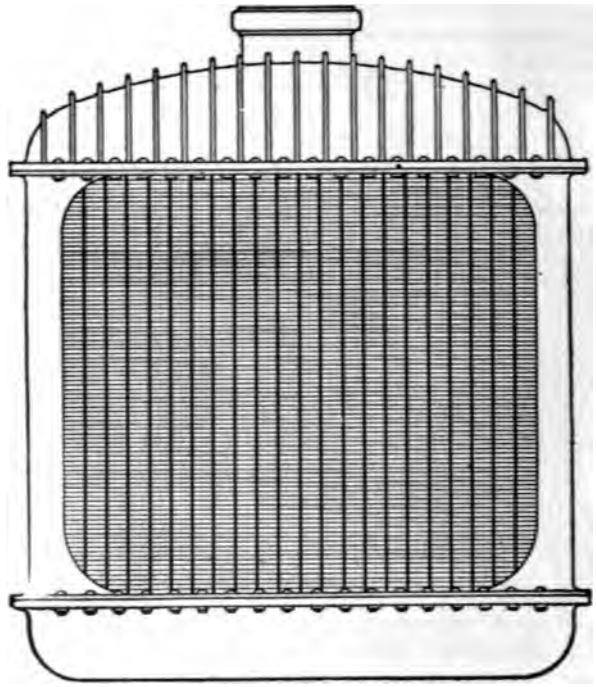

FIG. 306.—TRUCK TUBULAR RADIATOR WITH CAST TANKS.

different methods of mounting the radiator on the car frame. Of these probably the most common is the stud mounting (Fig. 308A). With this method two blocks of brass are soldered inside the bottom tank and drilled and tapped for screw studs. The radiator is supported on a cross member of the frame, which member should be so rigid that it will suffer very little distortion when the car travels over uneven roads. Often a channel section is used with the web placed horizon-

tally. Between the radiator and the supporting frame member are placed soft pads, about 2½ inches square, and the radiator is held in position by nuts screwed over the studs which pass through holes in the supporting member.

With either of the two other mounting methods the radiator is supported on the frame side members. One method makes use of brackets (Fig. 308B) and the other of trunnions (Fig.

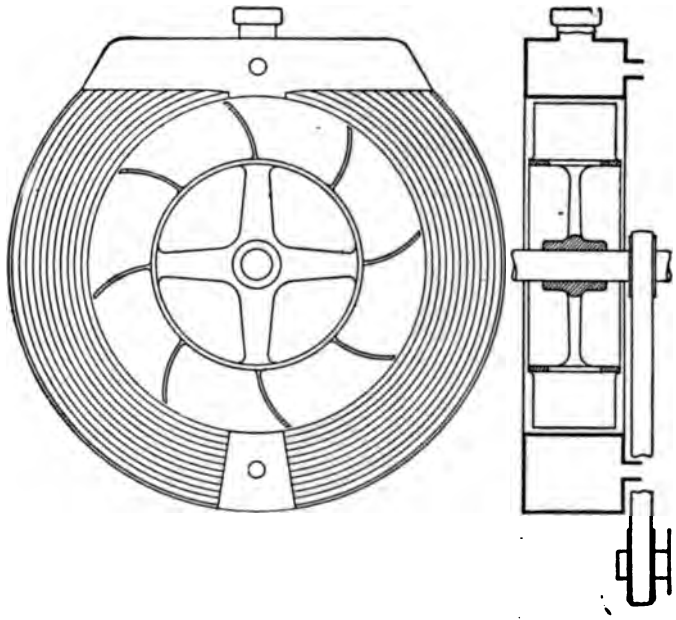

FIG. 307.—ROUND FORM OF RADIATOR WITH CENTRIFUGAL FAN.

308C). In both cases it is well to have the radiator constructed with a separate drawn casing of sheet steel, from which the radiator core and tanks are suspended. All strains due to weaving of the frame then come on the casing. This method of building the radiator with a separate casing also has advantages from the manufacturing point of view, as it permits of finishing the casing by enameling and baking it. It would not be possible to bake the case with the core owing to the danger of melting the solder.

In addition to the two points of support on the frame the radiator has a third support near the top. To the back of the top tank is secured a brace rod anchorage, from which a brace rod runs either to the dash or to the engine. Short lengths of rubber hose are always inserted in the pipe connections between engine and radiator to take up any slight relative motions and protect the radiator from engine vibration. Some European designers place the radiator on a bracket cast on the engine crank case. This permits of using rigid pipe connections, but the merit of the scheme from the standpoint of its effect on the life of the radiator is doubtful.

Radiators Behind Engine.—This arrangement (Fig. 309) was originated by the Renault firm of France and has been used by several other manufacturers. It has some practical advantages, but it hardly can be said that it improves the

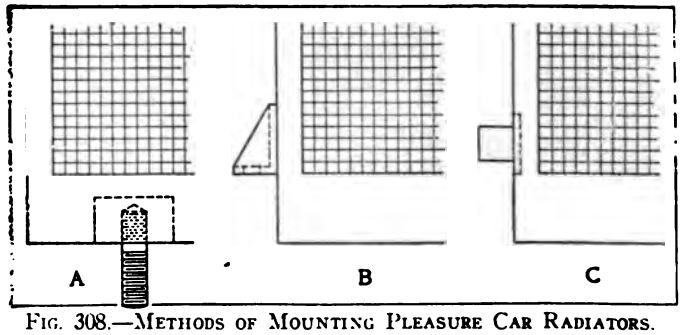

FIG. 308.—METHODS OF MOUNTING PLEASURE CAR RADIATORS.

appearance of a car. With no radiator in front many manipulations on the engine can be effected with greater freedom. The position of the radiator is favorable to thermo-siphon circulation, as the bottom tank is practically on the same level with the bottom of the cylinder jacket. Probably the greatest advantage over the front radiator is that it tends to keep the engine and accessories clean by drawing dust away from them instead of blowing it onto them. Since the motion of the car does not induce any air circulation in a rear radiator the latter has to be made much larger than a front radiator for the same engine.

The Thermo-Siphon System.—In thermo-siphon cooling systems, the circulation is due to the fact that water is expanded

by heat, and therefore a unit volume of hot water weighs less than a unit volume of cold water. A typical thermo-siphon

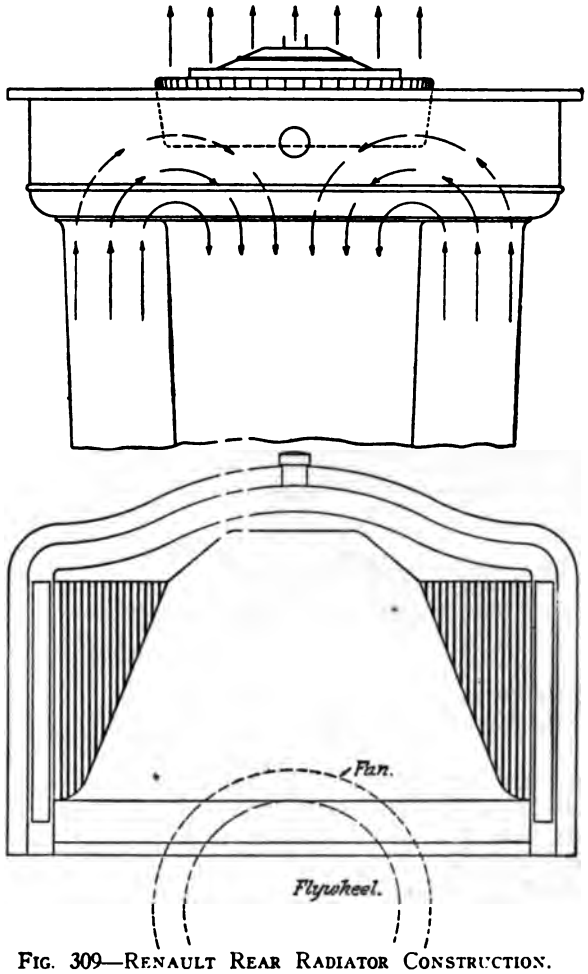

FIG. 309—RENAULT REAR RADIATOR CONSTRUCTION.

system is illustrated in Fig. 310. When the engine is cold the water is in equilibrium in the circuit and there is no circulation. If the engine is then started up the water in the cylin-

der jacket becomes heated and expands. The two columns of water represented by the two sides of the circuit remain, of course, of equal height, the level rising equally in both sides, and with equal height but unequal density the two columns no longer balance each other. As a consequence, the heated water from the jacket begins to rise and its place in the jacket is taken by cold water from the bottom of the radiator. This, too, is heated on coming in contact with the hot cylinder walls, hence it also rises, making way for more cold water from the radiator. Circulation may be said to be due to the fact that the average temperature of the water in the column represented by the jacket and its connections is higher than

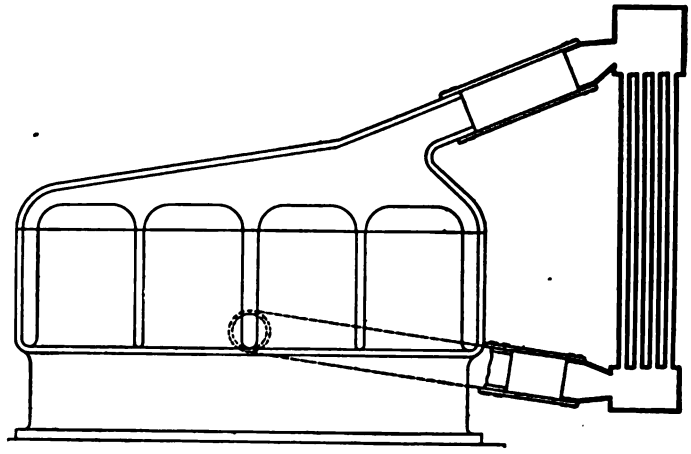

FIG. 310.—TYPICAL THERMO-SIPHON COOLING SYSTEM.

the average temperature of the column represented by the radiator, and hence the average density is less in the jacket column than in the radiator column. The rate of circulation depends upon this difference in the average densities. The temperatures, and consequently the densities, are the same at the tops and at the bottoms, respectively, of the two columns. Through the radiator there is a substantially uniform temperature gradient from top to bottom, which fact could not well be altered by changes in design. However, the average density of the water in the jacket column is affected by the relative height of the jacket with respect to the radiator. The water return pipe is completely filled with hot water, while the

pipe carrying the water from the radiator to the jackets is filled with cold water. Only about one-third of the height of the column is taken up by the jacket and the other two-thirds are taken up by the water pipes. Therefore, by placing the engine low relative to the radiator so that the water inlet

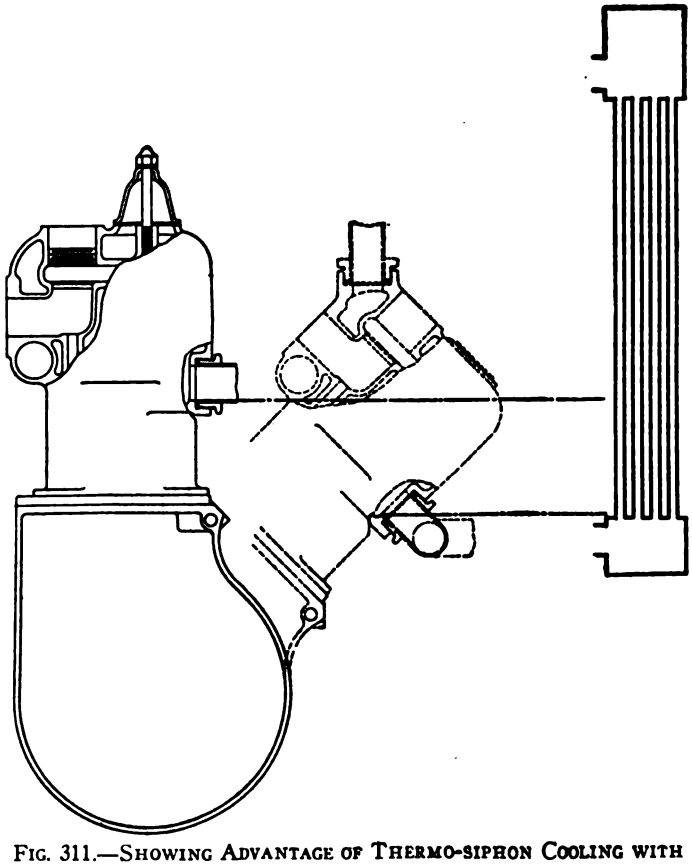

FIG. 311.—SHOWING ADVANTAGE OF THERMO-SIPHON COOLING WITH V-TYPE ENGINE.

pipe has only a small rise, or no rise at all, and the water outlet pipe a relatively large rise, the average density of the water in the jacket column can be decreased and thus the difference in density in the two columns, and, consequently, the

head causing circulation, can be increased. It is one of the conditions most essential to success with thermo-siphon cooling that the radiator be placed relatively high with respect to the cylinder jackets. From Fig. 211 it will be seen that a V-type engine lends itself particularly well to cooling by thermo-siphon circulation. In this cut a vertical cylinder and a cylinder making an angle of 45 degrees with the vertical are drawn in so that their crankshaft axes coincide, and it will be seen that the bottom of the jacket is considerably lower in the V-type engine than in the vertical engine. For the same reason the two cylinder opposed horizontal motor lends itself very well to cooling by thermo-siphon action.

Size of Pipes for Thermo-Siphon System.—Even under the most favorable circumstances the circulation producing pressures are exceedingly small (of the order of one-hundredth of a pound per square inch cross section of the column) and it is therefore necessary to make the resistance of the cooling circuit as low as possible. Radiators with very fine water passages, like the true cellular type, are not suitable for use in connection with thermo-siphon circulation. The pipes must not only be very liberal in size but the whole circuit must be made as short and as free from bends as possible. The system, therefore, is not so applicable to a six-cylinder motor as to other types and is rarely used on sixes. For the cross-section of the pipes it is well to figure on a heat transfer of 600 B. T. U. per minute per square inch of cross section at full engine load. The author has found some instances where the pipe area was nearly three times as large as given by this rule, but it seemed that these enormous pipes were made necessary by an unduly low positioned radiator.

The top tank of a radiator for thermo-siphon circulation must have considerable water capacity, for the water will, of course, gradually evaporate and if the water level in the tank falls below the inlet from the jacket, then circulation is greatly hampered because the water from the jacket must be virtually raised over a wall. To secure this large water capacity it is customary to extend the top tank backward beyond the width of the radiator proper.

One respect in which thermo-siphon circulation differs from pump circulation is that whereas with the latter when the engine is shut down the circulation ceases, with the former it continues until the engine has cooled down almost to normal temperature. Thus, if a car with pump circulation is driven up a long heavy grade and the engine is then shut off, the

water in the radiator is apt to start boiling and steaming violently. This is due to the fact that circulation has ceased and the water in the jacket being already near the boiling point, is turned into steam by the heat in the cylinder walls, piston, etc., and this steam escapes through the radiator. In order to prevent excessive loss of water it is well to make the overflow pipe of radiators for thermo-siphon systems comparatively large.

FANS

If a radiator had to dispose of all the surplus heat of the engine by radiation—as that term is understood in physical science—it would have to be of enormous size. The process by which the transfer of the heat from the cooling surfaces to the atmosphere is mainly effected is that of convection. That is to say, a large volume of air is drawn through the radiator, which, in coming in contact with the radiator surface, takes up heat that has been conducted through the cooling walls, and then carries it away with it. At high car speeds a great deal of air naturally passes through any radiator mounted at the front of a car, but automobile engines sometimes work under considerable load —and consequently pass much heat to the radiator—at comparatively low car speeds, and in order that the radiator may be able to dispose of the heat under these conditions a fan is mounted directly behind it which is driven from the engine and draws air through the radiator.

Types of Fans.—Radiator fans are made in two types, viz., fans with sheet metal (steel or aluminum) blades riveted to a malleable iron or steel center or hub, and cast aluminum fans in a single piece. The latter are the more recent type and are generally based on aerial propeller design. The larger sizes of fans with sheet metal blades sometimes have all the blades pressed from a single sheet with an integral rim, as shown in Fig. 312. When this design is used the fan generally has six blades whose width increases toward the rim, so that the amount of waste material in the stamping process is not very great. The rim, of course, stiffens the outer ends of the blades and tends to prevent their accidental bending. In fans with four blades separate rims are sometimes attached. Large blades are often stiffened by corrugations pressed in the blade, as shown

in Fig. 313. This permits of lighter material being used and of reducing the arm length of the spider.

Fans cast of aluminum are seldom made with plane blades of a fixed pitch angle. On the contrary, the elements of these blades generally form helices around the axis of the fan. For instance, if we imagine a cylindrical surface of a diameter equal to the outer diameter of the fan, and co-axial with

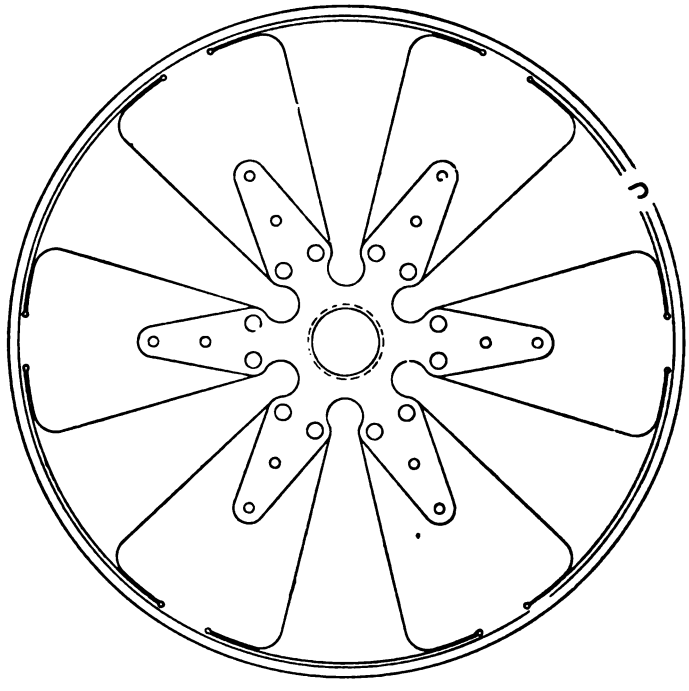

FIG. 312.—PRESSED STEEL FAN WITH INTEGRAL RIM.

the latter, the outer edge of the blade will form a part of a helix on that surface. The distance along the cylindrical surface in a direction parallel with the axis in which the helix makes a complete revolution around its axis is known as the pitch of the helix or the blade. In a helical fan, as we pass from the outer edge of the blade inward toward the axis, the angle of the blade elements increases in the same measure as the distance from the axis decreases, so that the

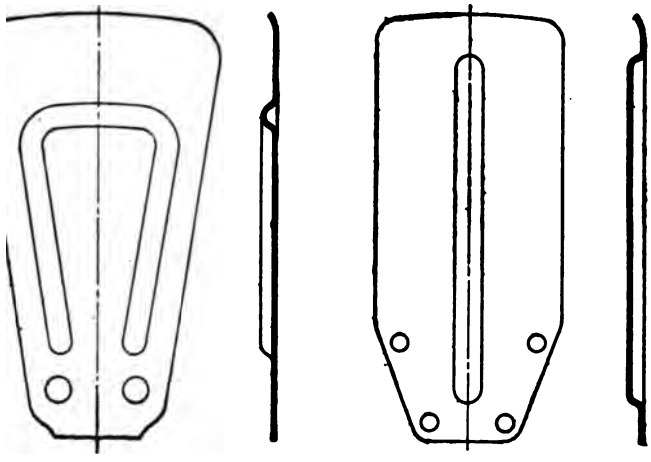

FIG. 313.—FAN BLADES STIFFENED BY CORRUGATIONS.

h remains the same. In an actual fan the blades, of rse, are not mere surfaces, but have considerable thick-, and the curved surface above defined forms the central ıce of the blades. Fig. 314 shows a two-blade helical fan.

eory of Fan Action.—In order to develop equations for ir delivery and power consumption of fans we have to some extent into the theory of fan action. It is, of , quite impossible to accurately calculate the air which e drawn through a radiator on a given car, as this s not only upon the relative "openness" of the radiator which the fan is mounted, but also very largely upon edom with which the air drawn in through the radia- escape from the engine space. The fan blows the tly against the engine, generator, carburetor, exhaust . At the bottom the engine space is enclosed by

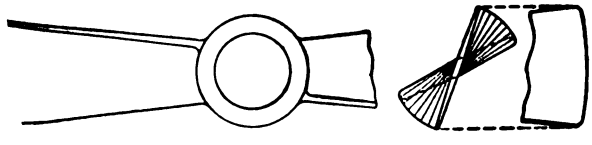

IG. 314.—TWO-BLADE PROPELLER TYPE FAN.

the muopan, and considerations of public taste generally forbid the provision of louvres in the bonnet through which the air might escape. A great many cars now have the flywheel enclosed, and the only outlet for the air, then, is between the flywheel housing and the pan, which is generally of much smaller section than the aggregate air space in the radiator.

What the formulæ which we shall develop will show is the air delivered by the fan, and the power represented by the air movement (the fan output) under ideal conditions, as when the fan is surrounded by a short tube just a trifle larger

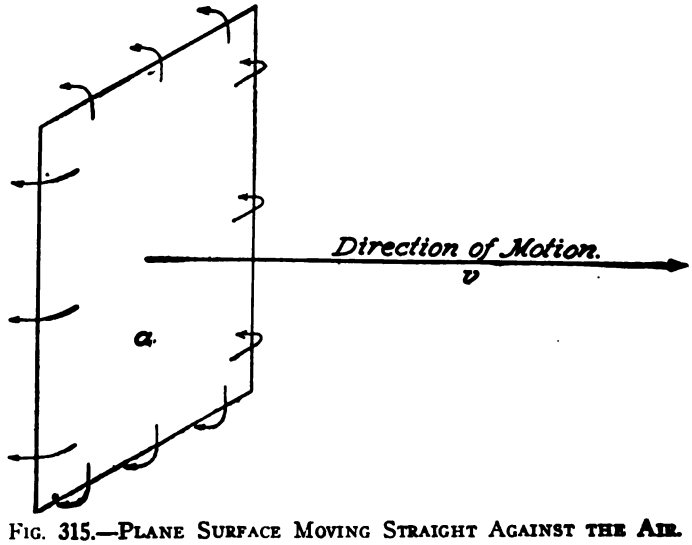

FIG. 315.—PLANE SURFACE MOVING STRAIGHT AGAINST THE AIR.

in diameter than the fan itself, with flaring inlet and outlet to avoid eddies as far as possible. On a car, owing to the restricted air admission to the engine space and the more or less obstructed outlet, there will be a certain "slippage" or loss of air capacity, which in well worked out designs should not, however, exceed 30 per cent. The equations will permit of directly comparing fans of different numbers of blades, diameter, width, form and inclination of blades, as to air delivery and power consumption.

It may here be pointed out that one of the most common causes of improper cooling in modern cars is an insufficient

area of air outlet from the bonnet space. As the speed of the air at the most restricted passage increases, the efficiency of all kinds of fans becomes more nearly alike. In fact, the efficiency of the whole air circulation system depends to a considerable extent upon the maximum speed which the air attains, the power required to move the air increasing as the cube of this speed.

Air Resistance.—Consider a plane of a square feet area to be moving in a direction normal to itself at a speed of v feet per second. Then in one second it will displace $a\ v$ cubic feet of air. This air will spill over the edges of the plane, as shown in Fig. 315, and at the moment will have a velocity v in the direction of motion of the plane and the same velocity in a direction parallel to the plane. The resultant of these velocities is forward at an angle of 45 degrees to the direction of plane motion, and the actual maximum velocity of the air is equal to the square root of the sum of the squares of its component velocities:

$$V = \sqrt{2}\ v$$

By reason of this velocity, the air has stored up a certain amount of kinetic energy, $m\ V^2/2$. Designating by W the weight of one cubic foot of air, the mass of air displaced per second is

$$m = \frac{W\ a\ v}{g}$$

Therefore, the kinetic energy stored up

$$E = \frac{W\ a\ v}{2g}\ (\sqrt{2}\ v)^2 = \frac{W\ a\ v^2}{g}$$

This energy, which is imparted to the air by the moving surface, is made up of two factors—the distance v moved by the surface and the resistance R encountered by it. Hence

$$R = \frac{\frac{W\ a\ v^2}{g}}{v} = \frac{W\ a\ v^2}{g} \textit{pounds}$$

The weight of one cubic foot of air under normal atmospheric conditions is 0.077 lb., and the acceleration of gravity is 32.16. Hence

$$\frac{W}{g} = \frac{1}{418}$$

and

$$R = \frac{a\ v^2}{418}\ lbs.$$

Normal Resistance to Obliquely Moving Plane.—Now let us take a plane surface (Fig. 316) moving in an oblique direc-

tion, the angle between the surface and the direction of motion being denoted by θ. We will use the same designations for the area and speed of the surface as in the previous case. Then since the surface a is inclined at an angle θ it receives only as much air as a perpendicular surface $a \sin \theta$ would. In other words, the speed of impact is only $v \sin \theta$, and substituting this for the speed in the equation for the pressure we get for the pressure on an inclined plane in the direction of motion

$$R = \frac{a\ v^2 \sin^2 \theta}{418}$$

However, the full reaction between the plane and the air is in a direction perpendicular to the plane, and the reaction

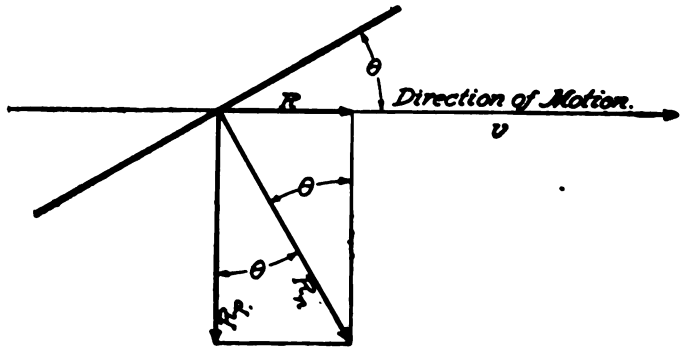

FIG. 316.—PLANE SURFACE MOVING OBLIQUELY.

in the plane of motion is only a component of the full reaction. Referring to Fig. 316, it will readily be seen that since

$$R_n = \frac{R}{\sin \theta}$$

the normal reaction is

$$R_n = \frac{\frac{a\ v^2 \sin^2 \theta}{418}}{\sin \theta} = \frac{a\ v^2 \sin \theta}{418}$$

This expression is of great use in the investigation of fans. It is known as the law of von Loessl, and is often quoted in connection with problems relating to the sustaining force of aeroplanes. The pressure at right angles to the direction of motion which forms the other component of the normal pressure may be seen from Fig. 316 to be

$$R_p = a\ v^2 \sin\theta \cos\theta.$$

We found above that when a surface moves straight on against the air the pressure developed is

$$R = \frac{a\ v^2}{418}$$

Here v may be regarded as the speed of impact between the stationary air and the moving plane. Now in a direction of right angles to the direction of motion the plane is stationary and the air moves. Let the speed of impact in this direction, i. e., the speed of the air, be denoted by V. Then

$$\frac{a\ v^2}{418} = \frac{a\ v^2 \sin\theta \cos\theta}{418}$$

and the speed of the air in the direction at right angles to the direction of motion of the plane is

$$V = v\sqrt{\sin\theta \cos\theta}$$

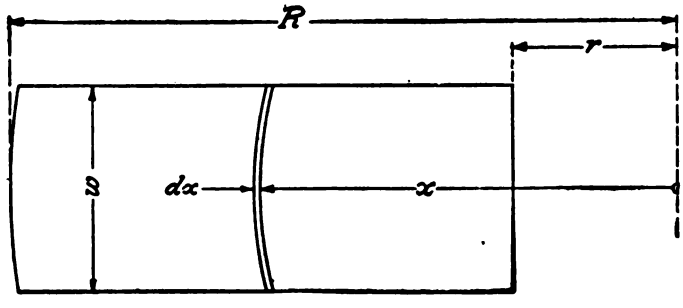

FIG. 317.—DIAGRAM OF FAN BLADE.

We may now apply these principles to the case of a fan. In the ordinary radiator fan we have a plane blade making a certain angle with the plane of rotation. Referring to Fig. 317, we will take an element of this blade of radius x, the width of this element being dx, and the length w (the width of the blade). If we designate the speed of the fan in revolutions per minute by n then the speed of this element is evidently

$$v = 2\ \pi\ x\ n\ ft.\ p.m.,$$

x being given in feet.

Therefore, the speed of the air parallel to the fan axis will be

$$2\ \pi\ x\ n \sqrt{\sin\theta \cos\theta}\ \textit{feet per minute,}$$

and the element $w\ dx$ of the fan blade will deliver

$$d\ V = 2\ w\ \pi\ n \sqrt{\sin\theta \cos\theta}\ \theta\ x\ dx\ \textit{cubic feet per minute.}$$

Now, suppose that the blades are of constant width from the outer end, whose distance from the axis of rotation is R, to the inner end, whose distance from the axis of rotation is r. We then get the volume of air moved by the whole blade by integrating between the limits R and r, which gives

$$V = w\ \pi\ n\ (R^2 - r^2)\ \sqrt{\sin\theta \cos\theta}\ \textit{cubic feet per minute.}$$

If the fan has N blades, then the total volume of air moved per minute is

$$V = N\ w\ \pi\ n\ (R^2 - r^2) \sqrt{\sin\theta \cos\theta}\ \textit{cu. ft.}$$

This is the theoretical delivery, but in practice there is always a certain slip which amounts to as much as 20 per cent. in free air, and proportionately more if the fan must draw and deliver the air through restricted passages, as is the case on an automobile, and this proportion must, of course, be subtracted from the theoretical rate of delivery. It will be observed that with such a fan the volume of air moved per minute varies directly as the number of blades, the speed, the width of blade and a function of the blade angle, and nearly as the square of the fan diameter, since the inner radius is usually very small as compared with the outer radius.

Owing to the very irregular nature of the passage through which the air is forced on an automobile it is very difficult to calculate the volumetric efficiency or the proportion of actual to theoretical air delivery of a fan on an automobile. Rather extensive tests of fans of different designs were published in the HORSELESS AGE of September 10, 1913. The fans were mounted in a box behind a radiator in the wall, and to the box was secured a tapering tube in three sections so that by removing sections the outlet area could be varied. The writer calculated the theoretical air capacity of five of the fans tested, and plotted the ratio of actual to theoretical air delivery by each fan for each of the three outlet openings, the latter being expressed as a fraction or multiple of the fan area. A curve drawn through the points thus found shows that the volumetric efficiency is about 70 per cent. when the minimum area of the outlet passage is equal to the area of the fan; 62 per cent. when it is three-fourths that

of the fan; 52 per cent. when it is half that of the fan, and 35 per cent. when it is one-fourth that of the fan.

Air Delivery of Tapering Blade Fans—A good many fans have blades whose width increases from the inner end outward. In that case the width at a radius x may be expressed by the equation

$$w = a + b\,x,$$

a being given in fractions of a foot, and b being a number denoting the increase in width per foot increase in distance from the axis. If we substitute this value of w in the equation for the air delivery due to an element of the blade we have

$$d\,V = 2\,\pi\,n\,\sqrt{\sin\theta\cos\theta}\,(a + bx)\,x\,dx.$$

Integrating between limits R and r, and introducing the number of blades N, we get for the air delivery

$$V = 2\,N\,\pi\,n\,\sqrt{\sin\theta\cos\theta}\left[\frac{a}{2}(R^2 - r^2) + \frac{b}{3}(R^3 - r^3)\right]$$

cu. ft. p.m.

Helical Blade Fans—Fans with plane blades are much used because of the ease with which they can be manufactured. It is at once apparent, however, that such fans do not produce a uniform air velocity over their whole surface. Since the speed of the blade elements increases with the distance from the axis of rotation, the speed of air flow increases similarly, and if the width of the blade also increases with the distance from the axis of rotation then the speed of air flow will vary even faster than the distance from the axis of rotation. In other words, through the radiator cells over which the outer portions of the fan blades sweep air will be drawn with great velocity, whereas through those cells swept by the inner portions of the blades the air will be drawn at much less velocity. As was pointed out in the discussion of radiators the air should preferably be drawn through the cells uniformly over the whole area of the radiator. This is desirable, not only because—assuming uniform distribution of water flow in the radiator—it insures the maximum cooling action from a given quantity of air passed per minute, but also because a given quantity of air flowing through a given passage per minute contains less energy if the speed of the air is uniform over the whole cross-section than if it is non-uniform; or, in other words,

less power as to be expended in maintaining that air flow. Therefore, if the fan is cast of aluminum, so that its blades can readily be made of any shape desired, they are generally made of helix or propeller form. Foreign manufacturers also make sheet metal blades of this form, riveting them to a rim at their outer ends.

Air-Delivery of Helical Fans.—In the helical fan we have again for the air delivered by an element $w\ dr$ of the fan blade

$$dV = 2\ W\ \pi\ n\ \sqrt{\sin\theta\ \cos\theta}\ x\ dx.$$

In this case the angle θ is not constant, but varies with x. We can, however, get a very good approximation to the actual air delivery by dividing the fan blade into annular sections, say one inch wide radially, assuming that the angle for each section is constant and equal to that at the middle of the section, then applying the equation for the air delivery of a plane blade to each section and adding the results obtained for the individual sections. If the width of the blades should not be constant, then the mean width of each section should be used in calculating the delivery due to that section. The following example shows the application of this method:

Assume a two-bladed fan of an outside diameter of 18 inches, an inside diameter of 4 inches, a width of blade of 4 inches and a pitch of 20 inches.

Then we must find the value of the expression

$$(R^2 - R_1^2)\sqrt{\sin\theta\ \cos\theta}$$

for each of seven different sections.

Now

$$\sin\theta = \frac{p}{\sqrt{4\ \pi^2\ x^2 + p^2}}$$

and

$$\cos\theta = \frac{2\ \pi\ x}{\sqrt{4\ \pi^2\ x^2 + p^2}},$$

Consequently

$$\sqrt{\sin\theta\ \cos\theta} = \sqrt{\frac{2\ \pi\ x\ p}{4\ \pi^2\ x^2 + p^2}}$$

where

$$x = \frac{R + R_1}{2}$$

The total air delivery then is

$$V = N\ w\ \pi\ n\ \Sigma\ (R^2 - R_1^2)\sqrt{\frac{2\ \pi\ p\left(\frac{R + R_1}{2}\right)}{4\ \pi^2\left(\frac{R + R_1}{2}\right)^2 + p^2}}$$

All dimensions must be given in feet. We get the following values for the different sections:

$R^2 - R_1$		$\sqrt{\frac{2\pi x p}{4\pi^2 x^2 + p^2}}$	$(R^2 - R^2_1)\sqrt{\frac{2\pi x p}{4\pi^2 x^2 + p^2}}$
$\frac{9^2 - 8^2}{144}$	= 0.117	0.572	0.0668
$\frac{8^2 - 7^2}{144}$	= 0.104	0.600	0.0623
$\frac{7^2 - 6^2}{144}$	= 0.0902	0.628	0.0566
$\frac{6^2 - 5^2}{144}$	= 0.0764	0.660	0.0505
$\frac{5^2 - 4^2}{144}$	= 0.0625	0.686	0.0429
$\frac{4^2 - 3^2}{144}$	= 0.0486	0.706	0.0343
$\frac{3^2 - 2^2}{144}$	= 0.0348	0.713	0.0248
		Total.....	0.3381

Therefore at 2,800 r.p.m.

$$V = 2 \times 0.333 \times 3.14 \times 2{,}800 \times 0.338 = 1{,}970 \text{ cu. ft.}$$

The middle column of the above table shows the relative density of the air flow at different distances from the axis of rotation. It indicates a slight increase in air speed toward the axis of the fan and proves the soundness of the practice of slightly decreasing the width toward the axis.

Power Absorbed by Fans.—We found above that the component of the normal pressure on an obliquely moving plane in the direction of motion is

$$\frac{a\, v^2 \sin^2 \theta}{418}$$

Therefore, the component of the normal pressure in the direction of motion on an element $w\, dx$ of a fan blade is

$$\frac{v^2\, w\, dx \sin^2 \theta}{418} \text{ lbs.}$$

The velocity of the element is

$$v = \frac{\pi x n}{30} \text{ ft. p. s.}$$

Hence

$$v^2 = \frac{\pi^2 x^2 n^2}{900}$$

Substituting this value of v^2 in the above expression for the component of the pressure in the direction of motion, we get

$$dF = \frac{\pi^2 x^2 n^2}{540} \times \frac{w\, dx \sin^2 \theta}{418} = \frac{\pi^2 n^2 w \sin^2 \theta}{376,200} x^2\, dx$$

The moment of this force around the axis of rotation is found by multiplying both sides of the equation by x.

$$x\, dF = dM = \frac{\pi^2 n^2 w \sin^2 \theta}{376,200} x^3\, dx.$$

Integrating between limits R and r we get the total moment due to one blade:

$$M_1 = \frac{\pi^2 n^2 w \sin^2 \theta}{1,504,800} (R^4 - r^4).$$

If there are N blades we must multiply by this figure to get the total moment for the whole fan, and the horsepower equivalent of the output is then found by multiplying by $2 \pi n$, and dividing by 33,000 —

$$H.\ P. = \frac{\pi^3 n^3 w \sin^2 \theta}{25,000,000,000} (R^4 - r^4).$$

The input in horsepower is, of course, somewhat greater, because there is frictional loss at the bearings and, besides, the fan blades do not consist of mere surfaces, but of plates of some thickness whose forward edges stir up the air and thereby create a loss. The above equation also assumes that the fan is working in free air. This is not the case in an automobile, as both the inlet and outlet are more or less restricted—the inlet by the radiator, and the outlet by the limited area of the opening through which the air must leave the engine space. Restriction of the inlet and restriction of the outlet have opposite effects on the power absorbed, and may therefore neutralize each other. Restriction of the inlet causes the fan to revolve in a partial vacuum, and reduces the power consumption, while restriction of the outlet causes an over-pressure in the space around the fan, and increases the power consumption

In a fan with plane blades of tapering width in which

$$w = a + bx$$

the torque moment due to an element of the fan blade is

$$dM = \frac{\pi^3 n^3 \sin^2 \theta}{376,200} (a x^3\, dx + b x^4\, dx)$$

and the horsepower consumed is

$$H.\ P. = \frac{N \pi^3 n^3 \sin^2 \theta}{6,200,000,000} \left[\frac{a}{4} (R^4 - r^4) + \frac{b}{5} (R^5 - r^5)\right]$$

In these equations the dimensions R, r and a must be inserted in terms of the foot.

Power Absorbed by Helical Fans.—If we take an element $w\, dx$ of a helical fan blade the torsional moment due to this element is again

$$dM = \frac{\pi^2 n^2 w \sin^2 \theta}{376{,}200} x^2 dx.$$

In this case

$$\sin \theta = \frac{p}{\sqrt{4 \pi^2 r^2 + p^2}}$$

and

$$\sin^2 \theta = \frac{p^2}{4 \pi^2 r^2 + p^2}.$$

Inserting this value in the above equation, we get

$$dM = \frac{\pi^2 n^2 w p^2}{376{,}200} \times \frac{x^2 dx}{4 \pi^2 x^2 + p^2},$$

which may be simplified to read

$$dM = \frac{n^2 w p^2}{1{,}504{,}800} \times \frac{x^2 dx}{x^2 + \frac{p^2}{4 \pi^2}}$$

The moment due to the whole blade is then found by integrating this expression. It will be observed that the variable x occurs only in the last part of the expression, and the first part, containing only factors which may be considered constant, in so far as they are not dependent on x, will be neglected for the moment. For the purpose of integration we write the last part of the expression in the following form:—

$$\frac{x^2 dx}{4 \pi^2 x^2 + p^2} = \frac{\left(x^2 + \frac{p^2}{4 \pi^2} - \frac{p^2}{4 \pi^2}\right) dx}{x^2 + \frac{p^2}{4 \pi^2}}.$$

$$\int \frac{\left(x^2 + \frac{p^2}{4 \pi^2} - \frac{p^2}{4 \pi^2}\right) dx}{x^2 + \frac{p^2}{4 \pi^2}} = \frac{x^2}{2} + \frac{p^2}{8 \pi^2} \log_n \left(x^2 + \frac{p^2}{4 \pi^2}\right) + C$$

If now we introduce the limits R and r, we get

$$\tfrac{1}{2} \left[R^2 - r^2 - \frac{p^2}{4 \pi^2} \log_n \frac{R^2 + \frac{p^2}{4 \pi^2}}{r^2 + \frac{p^2}{4 \pi^2}}\right]$$

The moment for one blade, therefore, is

$$M_1 = \frac{n^2 w p^2}{3{,}009{,}600} \left[R^2 - r^2 - \frac{p^2}{4 \pi^2} \log_n \frac{R^2 + \frac{p^2}{4 \pi^2}}{r^2 + \frac{p^2}{4 \pi^2}}\right]$$

Introducing the number of blades N, multiplying by $2\pi n$, and dividing by 33,000, we get the horsepower equivalent of the output of the fan—

$$H.P. = \frac{N\, n^2\, \pi\, w\, p^2}{49{,}660{,}000{,}000} \left[R^2 - r^2 - \frac{p^2}{4\pi^2} \log_n \frac{R^2 + \frac{p^2}{4\pi^2}}{r^2 + \frac{p^2}{4\pi^2}} \right]$$

which must be divided by the efficiency factor to get the power input. It appears from some fan tests of which the writer has the data that an efficiency of 75 per cent. can be figured on. In the above equation, as in all others in this section, all linear dimensions must be in feet. The natural logarithm, which occurs in the equation, is found by multiplying the ordinary logarithm by 2.303.

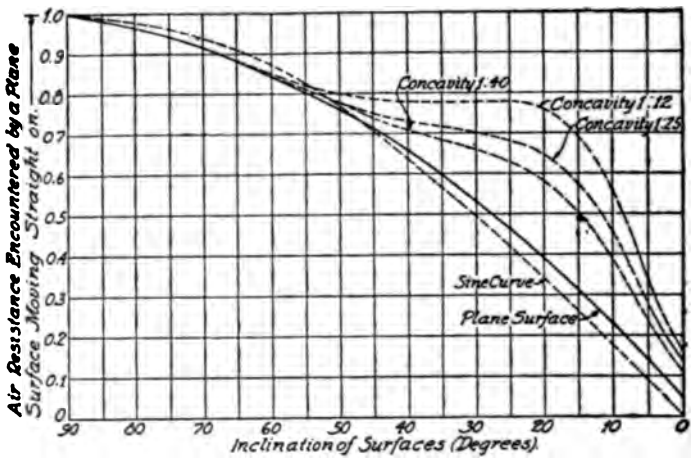

FIG. 318.—PRESSURE ON CONCAVE SURFACE MOVING OBLIQUELY THROUGH THE AIR (LILIENTHAL'S EXPERIMENTS)

Concave Blades.—It was discovered by Lilienthal, one of the pioneer experimenters in the field of flight, that the air pressure on a surface which is inclined to the plane of motion is greatly increased by making that surface concave on the side which repulses the air. The gain is especially great if the angle of the surface with the plane of motion is small. The surfaces investigated by Lilienthal had a section in the form of a circular arc, and are defined by the

ratio of the height h to the length s of the chord. Lilienthal investigated surfaces of three degrees of concavity—1:12, 1:25 and 1:40. In the case of the concaved surfaces the angle is that between the chord of this surface and the plane of rotation. It is a rather peculiar fact that with the degree of concavity 1:12 there is no appreciable variation in the air pressure, and hence in the air delivery, for angles of 20 to 45 degrees, and with surfaces of smaller concavity the variation in the air delivery, if the angle is changed from one of these extremes to the other, is also much less than

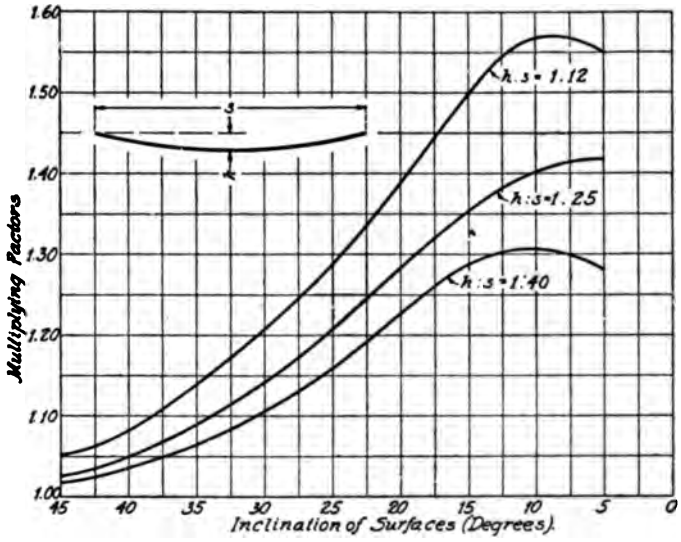

FIG. 319.—DIAGRAM SHOWING INCREASE IN AIR DELIVERY DUE TO CONCAVING FAN BLADES.

in the case of plane surfaces. In the experiments which led to the results recorded in Fig. 318 the surfaces were moved in a circular path of 23 feet diameter, at speeds up to 2,400 ft. p.m. All of the surfaces used had the same form, and an equal area of 5.38 sq. ft. Lilienthal's experiments proved further that for degrees of concavity greater than 1:12 the air delivery decreases again. It also appears from his experiments that at higher speeds than 2,400 ft. p.m. the best concavity is less than 1:12, and that for each speed there is a corresponding optimum concavity.

The tests made and the results recorded bear on the full pressure against the surface. Except for very small angles of inclination, the direction of this pressure is substantially perpendicular to the chord. If this pressure is multiplied in a certain ratio its components in the plane of motion and at right angles to this plane are multiplied in the same ratio. This means that the power consumed increases in proportion to the normal pressure, and the thrust at right angles to the plane of motion the same. The latter is proportional to the square of the air delivery. Hence the air delivery will be increased by concaving the blade, in a ratio which is equal to the square root of the ratio in which the normal pressure is increased. Curves showing the proportional increase in air delivery, due to various degrees of concaving with different blade angles, which were derived from the Lilienthal curves, are shown in Fig. 319. Concaving the blades, however, has another advantage besides making it possible to obtain a greater air delivery from a fan of given blade dimensions, number of blades and speed of revolution. It insures a higher efficiency; that is, less power consumption for a given air delivery.

It will have been noticed that with each form of blade the air delivery is directly proportional to the speed. On the other hand, the power consumed increases as the cube of the speed. Thus, for instance, if we double the speed of the fan we get twice as much air per minute, but the power consumption will be eight times as great. Now, by concaving the blades of a fan we can increase the delivery of that fan in a certain ratio, which we will designate by r. Then the power consumption of that fan will also increase in the ratio r. However, if only the original air delivery is required, then, if we designate the speed at which the straight-bladed fan gives this delivery by v. the concave-blade fan to give the same delivery needs to run only at a speed $\frac{v}{r}$. If we designate the power consumed by the straight-bladed fan by P, then that consumed by the concave-bladed fan at the same speed is $P\ r$. and for the same air delivery as that of the straight-blade fan this fan will consume

$$P\ r \times \frac{1}{r^3} = \frac{P}{r^2},$$

which is less than P, since r is greater than unity. This proves the greater efficiency of the concave blades.

Fan Capacity Required.—Since at high speed the motion of the car induces sufficient air circulation to abstract from the radiator all the heat that enters it, it is obvious that the fan capacity per engine horsepower or per B. T. U. to be disposed of need not be as great in a high speed car as in a low speed one. Data of the fan equipment of five different vehicles, all of well-known make, ranging from a 5-ton truck to a 70-mile-per-hour touring car, when averaged shows the following theoretical air capacities per B. T. U. to be disposed of in the radiator at full engine load for different classes of vehicles:

Maximum Vehicle Speed.	Cub. Feet of Air Per B. T. U. Entering Radiator
15 m.p.h.	1.5
30 m.p.h.	1.25
45 m.p.h.	1.
60 m.p.h.	0.75
70 m.p.h.	0.6

If the engine is of the ordinary L or T head type the B. T. U. to be disposed of may be quickly found by multiplying the maximum brake horsepower by 68, and by multiplying the product thus obtained by the fan capacity factor corresponding to the maximum speed of the vehicle, taken from the above table, we have the necessary theoretical air capacity of the fan in cubic feet per minute at the speed corresponding to the engine speed of maximum output.

In choosing the diameter of the fan the point must not be lost sight of that if the fan is located directly back of the radiator, only that portion directly covered by the fan sweep will benefit by it, hence, the diameter should be such that its sweep will cover nearly the whole of the radiator. However, the diameter must also not be too large, because of the great inertia force of such a fan. It appears that 20 inches is considered the maximum diameter and in small cars fans only 13 inches in diameter are used. It seems reasonable to increase the diameter with the air capacity required. In big trucks and powerful touring cars on which 20-inch fans are used the air capacity is between 4000 and 4500 cubic feet per minute, and on small, low-powered cars employing 13 and 14-inch fans the required air capacity is only about 1500 cubic feet per minute. These figures permit of a suitable choice to be made for any case.

As between a fan of smaller diameter covering only a relatively small fraction of the radiator surface and a larger fan

running at somewhat lower speed, the advantage lies undoubtedly with the latter. In flat-bladed fans the angle of the blade with the plane of rotation usually lies between 20 and 34 degrees. If the diameter and angle of blade have been determined upon the other factors can be settled by an application of the equations for fan capacity.

Details of Design.—A detail improvement that has been made to sheet metal blade fans with tapering blades consists in setting the forward edge of the blades parallel to the plane of rotation, which permits of placing the fan closer to the radiator. Sometimes a strip at the forward edge of the blade is bent so as to lie in the plane of rotation. Concave

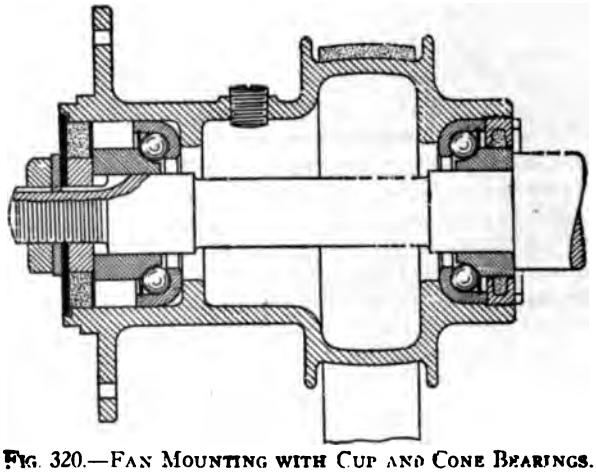

FIG. 320.—FAN MOUNTING WITH CUP AND CONE BEARINGS.

sheet metal blades have been used to some extent. Concaving is, of course, also applicable to the blades of cast aluminum fans. In the case of the latter the concavity is decreased toward the axis so as not to interfere with the molding and also because with the large pitch angles near the hub concaving would be of little benefit.

Fan Mountings.—Usually the fan centre constitutes the hub in which the bearings are fitted and which revolves on a shaft extending from a bracket secured either to the cylinder block or the cam gear housing, but in some cases the fan centre is secured to a shaft which revolves incide a bearing formed integral with the bracket. Formerly, some designers

supported the fan from the radiator, but this method was found undesirable and was given up. Ball bearings are generally used in the hub of the fan, either of the cup and cone, or of the annular type, the former being mainly used in the United States, the latter in Europe. Fans with plain bearings are, however, also used to some extent. There is a very considerable forward thrust on the fan and this must be taken care of in some suitable way if plain bearings are used. Fig. 320 shows a typical fan mounting. Fan hub and pulley are cast integral in accordance with common practice. The hub is formed with two internal flanges, against which the cups of the cup and cone bearings abut. The cone of the rear bear-

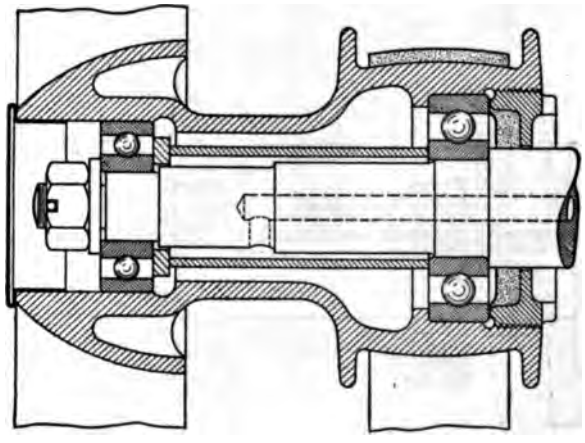

FIG. 321.—FAN MOUNTING WITH RADIAL BALL BEARINGS.

ing is pressed over the shaft against a shoulder on the latter and the cone of the forward bearing is adjusted in position by means of a nut on the end of the threaded shaft, which is provided with suitable locking means. The forward end of the hub is always closed, either by a metal cap or by a felt washer and ring, so that none of the dust drawn in through the radiator can get into the bearings.

A fan hub and pulley design employing annular ball bearings is shown in Fig. 321. In this an attempt is made to reduce the central dead area of the fan to a minimum by reducing the diameter of the hub toward the front. Both of the inner ball races are fixed on the shaft longitudinally by a spacer and

clamp nut, but only the rear one of the outer races is fixed in position, and this bearing, therefore, takes all the thrust load. The pulley is flanged, as in common practice. This fan is of cast aluminum and blades, hub and pulley are a single casting. In other designs of cast fans the fan proper is cast separately and bolted to the end of the combined hub and pulley.

A design of fan mounting in which the shaft revolves and the bearing is stationary is shown in Fig. 322. The bracket may be bolted down to the cylinder head, and by providing it with oblong slots for the bolts to pass through, it can be moved sideways for belt tension adjustment if the drive is from the camshaft or magneto shaft. From the standpoint of bearing

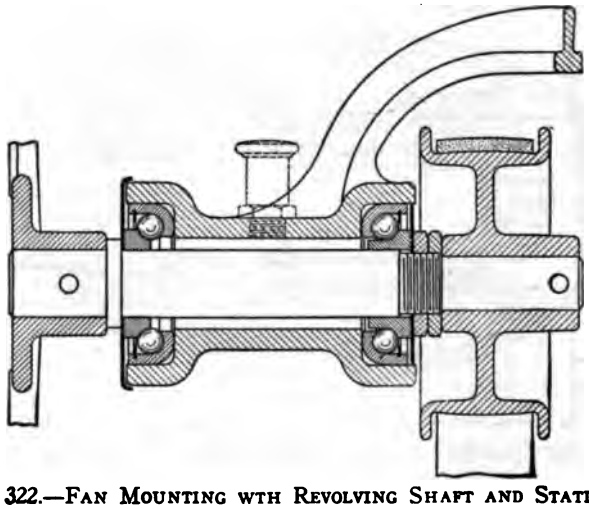

FIG. 322.—FAN MOUNTING WTH REVOLVING SHAFT AND STATIONARY HUB.

loads this design, of course, is much less advantageous than either of the preceding ones in which the pulley is located between the two bearings.

Fan Drives.—On most cars the fan is driven by belt. There are generally three shafts, to any one of which the driving pulley may be secured—the crankshaft, the camshaft and the magneto or generator-driving shaft. An objection to placing the pulley on the crankshaft is what might be called a traditional one. In power transmission on a large scale belts are

never arranged vertically, because in a vertical drive the weight of the belt tends to reduce the friction between the belt and the lower pulley. The weight of the belts often used in power plants is such that it alone will give sufficient grip on the pulley and the belt may be run comparatively loose. However, the weight of a belt of the size required for fan driving is insignificant, as compared with the pressure with which the belt must be applied to the pulley, and the objection mentioned therefore is void in this case. It is rather seldom that the driving pulley is secured to the camshaft, because the fan generally runs at about three times the speed of the camshaft and a very large driving pulley would be required on this shaft, as the diameter of the driven pulley is determined by the power to be transmitted. The favorite location of the fan driving pulley is on the magneto or generator driving shaft, which, in most cases, turns at crankshaft speed, hence requires only a small and light pulley.

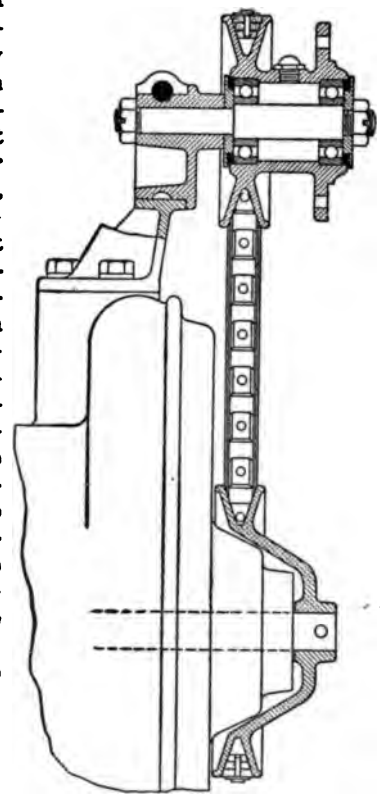

FIG. 323.—V-BELT DRIVE (WINTON).

Belt Drive Practice.—In designing the belt drive a maximum pull of 30 lbs. p. in. in width may be allowed in the belt. This is the difference between the tensions in the slack and taut sides of the belt and is equal to the tangential force at the circumference of the pulley. Belt widths have been standardized by the Society of Automobile Engineers, the standard dimensions being as follows:

Nom. Width	¾"	1"	1¼"	1½"
Limits of Width.....	[illegible]—[illegible]	[illegible]—1[illegible]	1[illegible]—1[illegible]	1[illegible]—1[illegible]
Limits of Pulley Face.....	0.87—0.88	1.12—1.13	1.37—1.38	1.68—1.6[illegible]

Belt speeds vary a great deal, from as low as 1200 feet per minute on some motor trucks to as high as 5000 feet per minute on some of the newer pleasure cars with high speed motors, but in the majority of pleasure cars the belt speed ranges between 2,000 and 3,000 feet per minute, based on the speed of maximum output of the engine.

Trapezoidal or V belts are used by several manufacturers. The angle included between two sides of the belt varies between 38 and 60 degrees. With such a belt a greater degree of adherence between belt and pulley is obtained with a certain bearing pressure, but undoubtedly for loads within the ca-

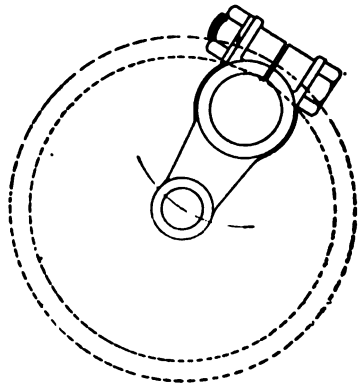

FIG. 324,—BELT ADJUSTED BY SWINGING ARM SHAFT SUPPORT.

pacity of the flat belt there is a greater loss with the V belt due to friction of the belt on the sides of the V groove and the extra work done in bending the thicker belt to the radius of the pulley. Several designs of sectional V belts are made, in which the leather is not subjected to severe bending stresses every time it passes over the pulleys.

Whenever belt drive is used provision must be made to take up any slack in the belt. This is generally accomplished by means of a swinging supporting arm or an eccentric device. The former method is illustrated in Fig. 324 and the latter in Fig. 325. Where the fan stud is supported by a bracket secured

to the cam gear housing the latter can be provided with vertical slots so that the stud can be shifted vertically. Means for lubricating the fan bearings must also be provided.

Positive Drives.—Some designers prefer the gear or silent chain drive to the belt drive, as the former require very little attention in use. Positive drives seem to be especially applicable to V type motors with a single camshaft, as then the camshaft gear is directly above the crankshaft pinion and a pinion on the fan shaft may mesh directly with the camshaft gear, so that no extra gears are required. Where the positive

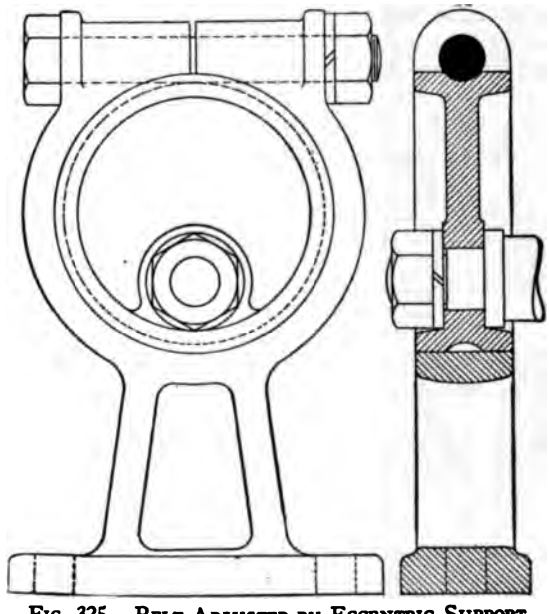

FIG. 325.—BELT ADJUSTED BY ECCENTRIC SUPPORT.

drive is used it is necessary to provide the fan with a friction clutch, so that it may slip when the speed of the engine changes suddenly. Otherwise, since the fan has considerable inertia and is generally geared to run at more than crankshaft speed, some part of the drive or of the fan itself is likely to break if the engine is quickly decelerated by jamming in the clutch. The fan centre is made in the form of a plate, which is held between two other plates keyed to the shaft, by means of a disc or spider-shaped spring (Fig. 326). To get a com-

paratively large frictional force with small surfaces it is well to face both sides of the fan centre with some friction material such as asbestos fabric. The pressure of this spring can be adjusted by means of a nut screwed over the end of the fan

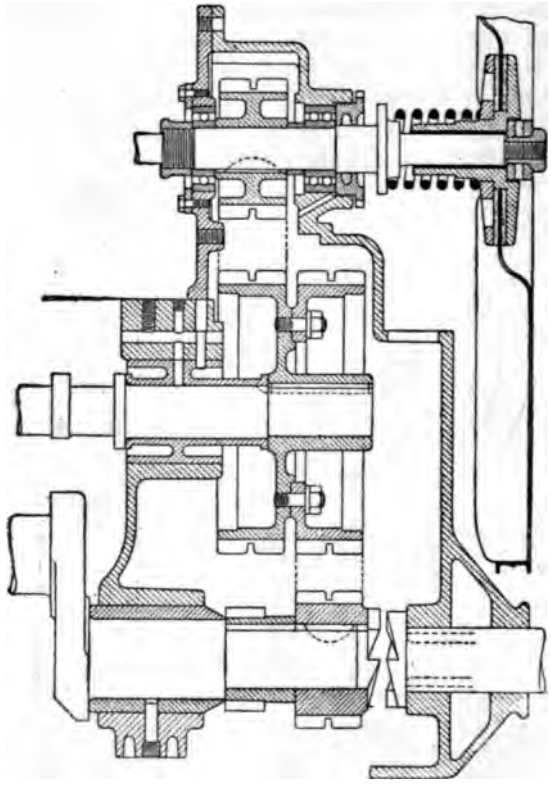

FIG. 326.—SILENT CHAIN DRIVE (CADILLAC).

shaft. Plain bearings are generally, though not necessarily, used in conjunction with the positive drive. The all gear drive has recently given way to quite an extent to the silent chain drive, on account of the great importance now attached to absolutely silent operation at all speeds.

A typical silent chain fan drive (Cadillac) is shown in Fig. 326. In this case the fan shaft is driven from the cam-

shaft, which in turn is driven from the crankshaft by another silent chain. From the fan shaft is driven the generator shaft by direct connection. The whole drive is enclosed and therefore can be well lubricated. In vertical engines a triangular silent chain drive may be used, the chain running over chain wheels on the crankshaft, camshaft, and fan shaft.

Fan Housing.—In the average car the fan sweeps over little more than one-half of the total area of the radiator and at low car speeds those portions of the radiator not covered by the fan dispose of comparatively little heat. Moreover, with the ordinary tapering blade fans the air velocity is much less near the axis than near the rim of the fan. In order to cause the fan to draw air through all parts of the radiator substantially uniformly, some makers place it some distance

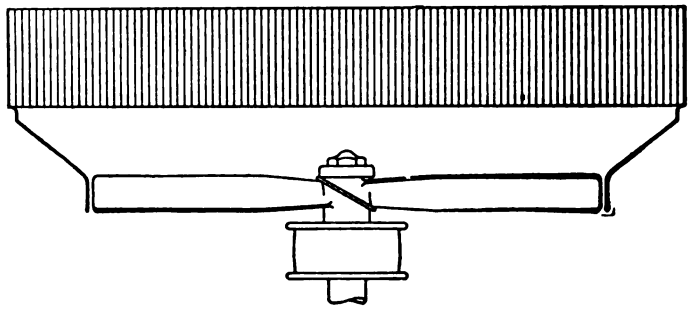

FIG. 327.—FAN HOUSING.

back of the radiator and provide a housing which closely surrounds the rim of the fan and is secured to the rear of the radiator, as shown in Fig. 327. It can conveniently be fastened to the ledge for the bonnet with which every radiator is provided. The angle made by the housing with the plane of the radiator should preferably not be less than 40 degrees, so that the flow of the air through the outermost portions of the radiator may not be impeded by a too sharp turn in its path. There is no doubt that such a housing materially increases the cooling capacity of a radiator and its use is advisable where space permits. It has been used in this country by Winton and Cadillac.

PUMPS.

In the gradual development of cooling systems all of the different types of pumps, including plunger, gear, vane and centrifugal pumps, have been used for circulating the cooling fluid, but to-day the centrifugal pump is used almost exclusively. In its earlier applications this type did not always prove satisfactory, probably owing to improper application due to a misunderstanding of its characteristics. Whereas all other types of pump mentioned circulate the water at a rate directly proportional to the speed, with the centrifugal pump the rate of circulation increases and decreases faster than the speed. Therefore, a centrifugal pump must be run at high speed, otherwise it must either be made comparatively large or it will not deliver enough water at low engine speeds. One advantage of the centrifugal pump over all the other types is that in case the pump fails for any reason the water can still circulate at a reduced rate by thermo-siphon action.

Importance of Rapid Circulation.—The importance of rapid water circulation is easily demonstrated. Suppose that in a certain car at full engine load 3000 B.T.Us must be disposed of in the radiator per minute. Then, if the water flows through the radiator at the rate of 150 lbs. (about 18 gallons) per minute, the temperature range need only be 20 degrees Fahr. On the other hand, if the water circulates only at the rate of 50 lbs. per minute, then the temperature range in the radiator must be 60 degrees. If we assume 170 degrees to be the temperature at which the water enters the radiator in the two cases, then the water will be cooled from 170-150 degrees in the first case and from 170-110 degrees in the second, the mean temperatures of the water in the radiator being 160 and 140 degrees respectively.

Since the rate of heat loss by radiation, convection, etc., is proportional to the difference between the mean temperature of the water in the radiator and the temperature of the outside air, if we assume the latter to be 80 degrees, then the capacity of a given radiator under the above two conditions varies as 80 to 60. In other words, a radiator 33 per cent larger is required with the slower water circulation. The increase in heat dispersion with an increase in circulation is shown by the curves in Fig. 328, which is taken from an article by Frank Briscoe in THE HORSELESS AGE. The figures in the cut refer to different radiators tested.

There is, however, still another advantage connected with rapid water circulation. If the water passes through the radiator rapidly its drop in temperature in the radiator is smaller and it enters the engine jacket at a higher temperature. As long as the water in the jacket does not attain the boiling point the cylinders will be satisfactorily cooled, and if it enters the jackets at a higher temperature the mean cylinder wall temperature will be higher and the fuel economy of the engine will be improved.

Centrifugal Pumps.—A centrifugal pump comprises two main parts, viz., the impeller and the housing. The impeller contains a set of curved vanes which sometimes are supported only by the hub, but more frequently by a disc at

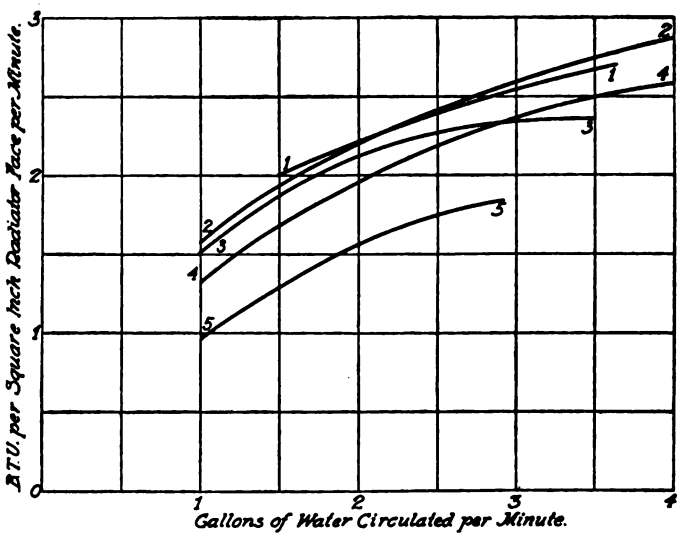

FIG. 328.—CURVES SHOWING VARIATION OF RADIATOR CAPACITY WITH RATE OF CIRCULATION.

one side. The housing, which must be made in two parts so that the impeller may be gotten into it, is provided with a water inlet concentric with the shaft on which the impeller is mounted, and with a water outlet at the circumference. In a cooling system on a car the water, of course, fills the whole pump chamber, the pump being always located on a level with the lower part of the radiator. Rotation of

the impeller sets the water between the impeller vanes in rotation and the centrifugal force resulting from this rotation causes the water to flow outward toward the circumference of the housing where it enters the volute—a water passage leading entirely around the circumference of the housing and gradually increasing in cross section from nothing to the full area of the discharge opening.

Theoretically there should be an annular space between the circumference of the impeller and the volute in which the water can change from the direction in which it is moving when leaving the tip of the impeller vanes to that it must follow in the volute. This space, known as a diffuser, is always provided in the larger stationary centrifugal pumps, but in automobile pumps, owing to space limitations, it is generally omitted and the water must then change its direction in the volute, which probably lowers the efficiency of the pump somewhat.

Angle of Vanes.—Centrifugal pumps used on automobiles, are of what is known as the low pressure type, and this determines the proper inclination of the vanes. In high pressure pumps the vanes, except for the inner portion where the water first comes in contact with them, are made concave toward the forward side; in moderate pressure pumps they are made radial, and in low pressure pumps they are made strongly convex toward the forward side. The reason for this is easily explained. As the water leaves the vanes its motion is the resultant of two components, viz., the peripheral speed of the impeller in the direction tangential to the point where the water leaves, and the motion of the water relative to the vane, parallel to the direction of the outer portion of the latter. In Fig. 329 are shown parallelograms of forces for the two cases respectively, and it will be seen that the resultant speed of the water is much greater if the outer portion of the vane is curved forwardly than when it is curved backwardly. But the height to which a stream of water will rise (and hence its pressure) is proportional to the square root of its velocity. On the other hand, the resistance to the flow of water through the pump is much less if the vanes are curved backwardly and, therefore, if only a small head has to be worked against, a pump with backwardly curved vanes will be more efficient than a pump with forwardly curved vanes but otherwise similar.

The pumps of automobile cooling systems have to work only against the friction head. This, even in extreme cases,

is equal to a static head of only a few feet. For pumps working against such a small head the discharge angle of the vane should be 170 degrees. That is, a tangent drawn to the vane curve at the outer end should make with a tangent to the impeller circumference at the same point an angle of 170 degrees. Usually six vanes are used. The method of laying out the vanes is then as follows (Fig. 330): First draw the circles representing the inner and outer diameters of the vanes. Rules for determining the proper diameters for any size of engine will be given later on. Divide the outer circumference into six equal parts. From one of the division points draw a radial line to the centre of the circle, and then from the same point draw a line making with the radial line an angle of 10 degrees. This last line must be back of

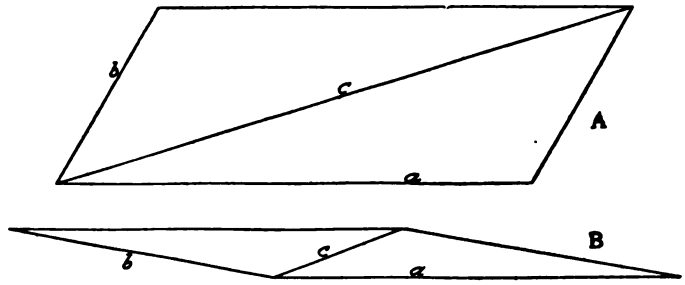

FIG. 329.—COMPOSITION OF WATER VELOCITIES IN CENTRIFUGAL PUMPS.

A, high pressure pump diagram; *B*, low pressure pump diagram; *a*, tangential speed of impeller rim; *b*, speed of water parallel to vane; *c*, resultant water speed.

the radial line, that is, in the opposite direction from that in which the vane moves when in the pump. Next draw radial lines through all the other five division points on the outer circle. Next find a point along the line making an angle of 10 degrees with the first radial line such that a circle struck from it through the intersection of this line with the outer circle will intersect the inner circle at the point where the next radial line forward intersects it. This circle forms the forward side of one vane and the rear side can be described with the compass from the same centre, making the thickness the minimum permitted by foundry conditions (about ⅛ inch). This completes one of the six vanes and the others are drawn in a similar way.

Some designers extend the vanes all the way in to the

hub and this, of course, is necessary where they are not supported by a disc, but where a supporting disc is used it seems preferable to leave an open space of annular form between the hub and the vanes, the diameter of this open space being made equal to that of the water inlet.

Dimensions of Pumps.—It is customary to drive the pump at crankshaft speed, though there are variations from this practice. An analysis of the dimensions of numerous pumps

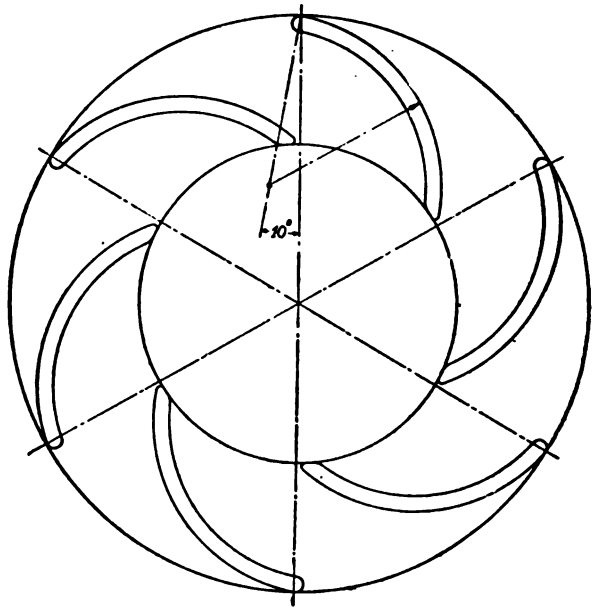

FIG. 330.—METHOD OF LAYING OUT VANES.

driven at crankshaft speed shows that the impeller diameter varies as the fourth root of the piston displacement of the engine. If we designate the piston displacement by V and the impeller diameter by D then

$$D = 1.1 \sqrt[4]{V}$$

The width of the vane at the impeller circumference is made 0.12 D, the diameter at the inner ends of the vanes and that

of the water inlet are made 0.56 D. Theoretically the width of the impeller should increase from the circumference toward the center in such a way that the product of the radius into the width is constant, as that insures constant water velocity in a radial direction. This gives an hyperbolic outline for the propeller which is difficult to form. In practice the width of the vanes decreases uniformly from the inner circumference to the outer. The width at the inner circumference is made one and one-half times that at the outer circumference, or 0.18 D.

It frequently happens that some other accessory is driven through the water pump and the proper diameter of the shaft then depends to some extent upon the power consumed by that accessory. In all ordinary cases, however, the shaft diameter may be made 0.15 D and the impeller hub diameter 0.25 D.

Pump Dimensions for Other Speeds.—If the pump is to be run at less than crankshaft speed, then, to give the same circulation, it must necessarily be made of large diameter, and if it is to be driven at higher speed it may be of smaller diameter. As for the same rate of circulation the same head is always required, and as the head is proportional to the square of the peripheral speed, if the speed is to be n times crankshaft speed, where n may be either greater or smaller than unity, then the impeller diameter should be made.

$$D_1 = 1.1 \sqrt[4]{\frac{D}{\sqrt{n}}}.$$

The other dimensions of the pump can be calculated by the same formula as for crankshaft speed.

Owing to the fact that the head due to a centrifugal pump varies as the square of its speed of revolution, whereas the resistance head due to pipes and other water passages varies not quite so fast as the square of the velocity of the water flowing through them, the rate of circulation through a given system caused by a given centrifugal pump varies slightly faster than the speed. Within the range of water velocities occurring in the piping of automobile cooling systems at normal engine speed it is permissible to figure that

$$S_w \sim (S_p)^{1.15}$$

where S_w is the rate of water circulation and S_p the speed of the pump. Thus, if the water circulation is to be increased 25 per cent the pump speed must be increased 21 per cent. If the rate of circulation is to be doubled the pump speed must be increased—83 per cent.

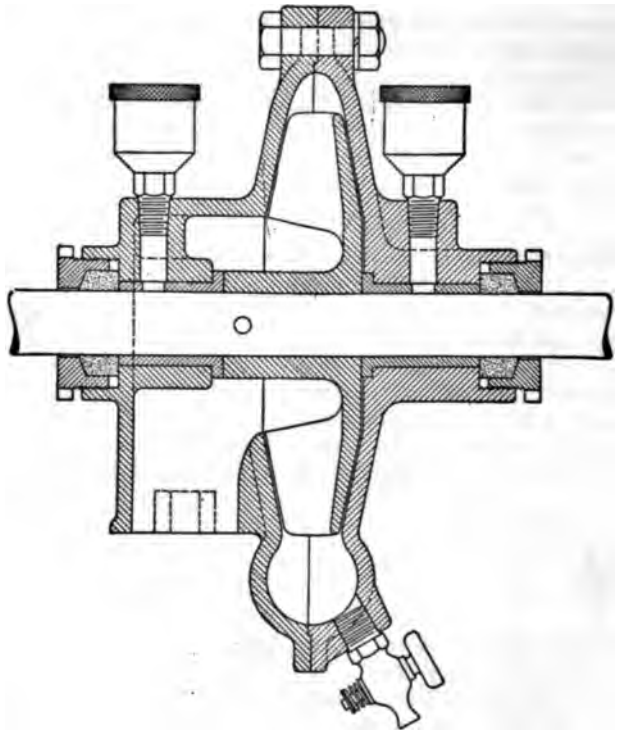

FIG. 331.—TWO-BEARING (THROUGH DRIVE) CENTRIFUGAL PUMP.

Details of Construction.—If some other accessory is to be driven through the pump shaft then the pump housing is often split in the center, the two halves being made symmetrical. A design of this type is shown in Fig. 331. This

construction requires two bearings and two stuffing boxes on the shaft. Where no "through drive" is necessary it is much preferable to use only a single bearing, as there will then be only one place to keep lubricated and only one stuffing box to become leaky and require packing. In that case the pump housing proper, including the entire volute, is made in a single casting which is provided with a plain cover plate preferably of sheet metal. The inlet may be either in the cover plate or around the pump bearing. Where the pump has only a single bearing it should be at least two

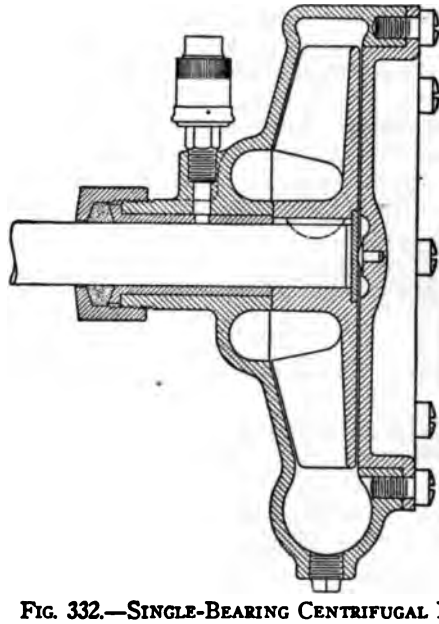

FIG. 332.—SINGLE-BEARING CENTRIFUGAL PUMP.

and a half diameters in length, for double bearings a length of one and one-half diameters is sufficient for each, but exigencies of design often necessitate the use of longer bearings. Each bearing must be provided with lubricating means, preferably a screw-down grease cup. A pump with a single bearing is shown in Fig. 332.

The volute, as already explained, increases uniformly in section all around the circumference. Its greatest section is equal to that of the water delivery pipe. Most designers

make the section of the volute circular at every point, and this gives somewhat less resistance to the flow of the water than if the volute is made of uniform width and flattened to decrease the area. The latter scheme is occasionally used however, to decrease the radial dimensions of the pump. If the cross section is to be circular everywhere then if the diameter at the outlet is *d*, the diameter one-quarter around from the outlet is 0.866 *d*, half way around, 0.707 *d*, three-quarters way round, 0.5 *d* and seven-eighths around 0.353 *d*.

Pump Drive.—In American practice, with vertical engines the pump is generally placed at the side of the engine near the forward end, with its axis parallel with the crankshaft, and is driven by gear from the camshaft gearing at crankshaft speed. The driving gears are then completely enclosed. If a magneto is used, it may be driven through the pump, otherwise the electric generator is often driven through it, as this arrangement saves practically one drive. Connection between the pump and the magneto may be made by a Hookham joint, a leather coupling or one of the spring couplings gotten out by the magneto makers. In Europe, where magneto ignition is still practically universal, a cross shaft is much employed, driven from the camshaft by helical gears and connecting to the magneto at one end and the pump on the other. This arrangement makes the pump very accessible.

As the water enters the pump from one side and leaves in a radial direction there is a small end thrust on the propeller. This should be taken up on the bearing in the housing and the hub of the impeller, so that the impeller proper clears the housing all around.

The stuffing box is packed with candle wicking soaked in grease. A brown paper gasket stuck on with shellac dissolved in alcohol can be used between the two halves of the housing. A drain cock or plug should be placed at the lowest point of the housing, so that all water can be drained off in cold weather.

Pump housings are often made of aluminum for the sake of lightness. They may also be made of brass, bronze or cast iron. Any of these materials will also do for the impeller. Housings are also made of pressed steel.

It will sometimes occur during the winter months that the owner forgets to drain the pump when leaving the car in

a cold garage. The pump may then freeze up, and when it is attempted to crank the engine, if the crankshaft does not move and the operator applies all his strength, he may break something. In order that the damage done in such a case may be of such a nature as to be easily repaired, it is customary to insert a "weak link" either in the drive or in the pump itself. For instance, one member of the driving coupling may be secured to its shaft by a pin of such diameter as to shear off before any injury is done to the pump, or the impeller may be secured to the shaft by such a pin.

Double Pump for V Motors.—For V motors, in order to insure equal circulation of water through both cylinder sets, either two pumps are used or special double pumps with vanes on both sides of a central disc, two volutes and two outlets which may be at different points of the circumference to suit the piping.

The power consumed by circulating pumps is very small. It is, however, impossible to give any rule for its calculation, as it varies with the very indeterminate resistance to water flow of the cooling circuit. Power tests of centrifugal pumps have occasionally been reported, but these tests are usually made with the pump working against a constant head instead of against a variable friction head, as in a regular cooling system.

Automatic Control of Circulation.—Although the rate of water circulation and the rate of air delivery both increase and decrease with the speed of the engine, in the ordinary car the cooling effect does not at all conform to the changing requirements under different conditions of engine loading and atmospheric temperature. For instance, if the engine runs at a given speed, the water circulation and air circulation remain the same, whether the engine runs idle or under full load, whether the atmospheric temperature is 100° or zero, though it is obvious that the heat to be dispersed is many times as great under full load as when idling, and the capacity of the radiator for dispersing heat is more than twice as great in zero weather as in hot summer weather. The result is that practically all cars which have a cooling system that is adequate under all conditions, over-cool their engines when lightly loaded and during cold weather, thus lowering the fuel economy and the ability of the motor to run smoothly at low speeds.

In the Cadillac eight-cylinder car the rate of circulation is automatically controlled. To this end a thermostat is used, in the shape of a short length of circularly corrugated copper pipe closed at both ends and filled with a liquid of low boiling point (ether). This is so sensitive to variations in temperature that it expands visibly when merely breathed against.

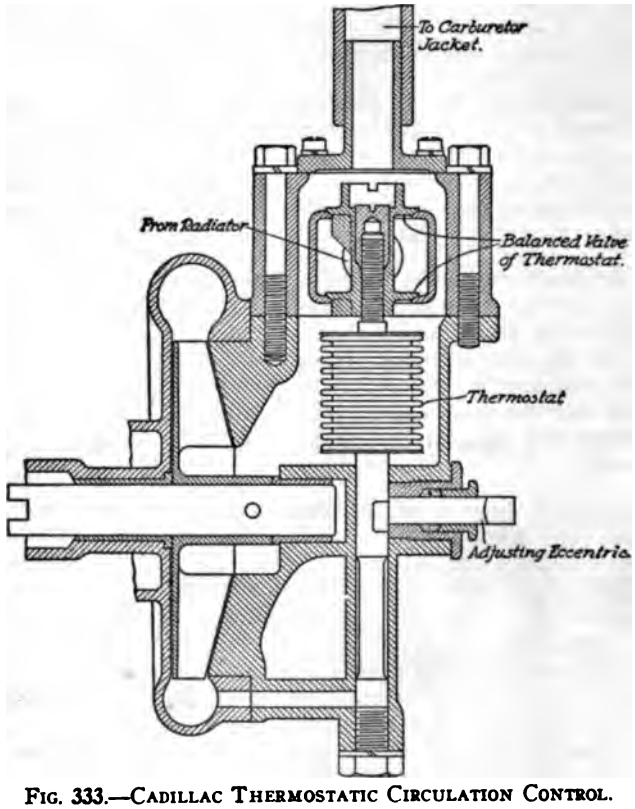

FIG. 333.—CADILLAC THERMOSTATIC CIRCULATION CONTROL.

The copper thermostat is located in a chamber adjacent to the pump, and the valve is directly above it. Water from the radiator enters the valve chamber at the side, and there are two outlets for it from this chamber through the double valve, one upward and one downward, the object being to make the valve independent of the suction of the pump and

subject only to the influence of the thermostat. There is a by-pass from the thermostat chamber to the carburetor jacket which constantly remains in communication with the pump, so that water can circulate through the carburetor jacket all the time. As long as the water is cool the thermostatic valve is closed, and there is therefore no circulation except through the by-pass to the carburetor jacket. This insures quick warming up of the water in the engine jacket. As soon as warm water reaches the thermostat it expands and opens the valve, and then the circulation takes place in the regular way through the pump, radiator and jacket. In normal operation, as the engine output increases and decreases, the valve opening increases and decreases, so that the rate of circulation will vary with the load. The tendency of the system therefore is to keep the engine temperature constant, because as soon as the engine temperature, and with it the cooling water temperature, rises, the thermostatic valve opens wider, reducing the resistance of flow and thus causing more rapid circulation, while, inversely, a decrease in the water temperature causes the thermostatic valve to close partly, thus obstructing and reducing the flow.

With such an automatic control of the circulation, a more powerful pump may be used than if there is no restriction to the flow. For instance, on the Cadillac car two pumps are used, one for each set of cylinders, with a 5-inch impeller each, whereas the rule given in the foregoing gives for the impeller diameter for a four-cylinder motor of the same cylinder dimensions as the Cadillac, 4 inches.

Hand control of circulation has been used on the Sheffield Simplex car, made in England. Thermo-siphon circulation is used, which is supplemented by pump circulation, the pump being started and stopped from the seat by means of a friction clutch.

Water Capacity.—The average water capacity of a complete system for pump and thermo-siphon circulation, respectively, may be found by means of the following equations:

For pump systems—

$$Q = 2 + \frac{C}{125} \text{ gallons;}$$

for thermo-siphon systems—

$$Q = 3 + \frac{C}{125} \text{ gallons}$$

where C is the piston displacement of the engine in cubic

inches. The water capacity necessary with any system depends largely upon the type of radiator employed, being largest with the flanged tubular type of radiator and smallest with the cellular type in which all water spaces are "live." The rate of circulation also has an effect, as has the speed of the vehicle. The preceding equations apply to pleasure cars only.

CHAPTER XXI.

AIR COOLING.

The heat absorbed by the cylinder walls of any explosion motor is finally dispersed in the atmosphere. With the water cooling system the water merely constitutes a vehicle for transferring the heat from the engine to the radiator, which latter gives it off to the atmosphere. With air cooling the heat passes from the cylinder walls directly to the atmosphere, and advocates of air cooling therefore refer to it as the direct cooling system.

Air cooling was used by Gottlieb Daimler in his first bicycle motor, but was soon discarded by him. It was successfully applied to cycle motors by Bouton about 1897. These motors had single cylinders of very small bore and stroke. It is easily proven that a small cylinder can be kept cool better than a large one. With the same temperature of cylinder wall the amount of heat radiated per unit of wall area will be the same in cylinders of all sizes. But since in a large cylinder the wall area is smaller, in proportion to the combustion chamber volume, more heat will have to be absorbed per unit of wall surface in order that the burning gases may drop in temperature as rapidly as in the small cylinder. Moreover, in some air cooled cycle or vehicle motors one side of the cylinder is exposed to a current of air which is either due to the motion of the vehicle or is produced by a fan. The other side of the cylinder, however, is shielded from this draught, and this shielding is the more effective the larger the cylinder dimensions. Consequently the tendency to overheat is the greater the larger the cylinders.

Cooling Flanges.—The amount of heat which will be absorbed or radiated by a unit of metallic surface depends upon the temperature difference between the surface and the surrounding air or gas. If the combustion chamber wall had the same area of surface in contact with the hot gases on the inside and the atmospheric air on the outside, then it would

tend to assume a temperature which would be a mean between the atsmospheric temperature and the average temperature inside the cylinder, particularly if the conditions of motion of the gaseous elements inside and outside the cylinder, with respect to the cylinder walls, were about the same. But this temperature would be far too high to permit of satisfactory lubrication, not to mention other likely troubles. According to some experiments made by Prof. H. L. Callender, the operating conditions of an air cooled motor cease to be satisfactory when the cylinder head attains a temperature of 570° Fahr.

Reduction of Heat Absorption—In order to keep down the cylinder wall temperature it is necessary to so shape and finish the inner surfaces that they will absorb a minimum amount of heat, and the outer surfaces so that they will radiate this heat most readily. It has been found by laboratory experiments that a polished metal surface does not radiate heat nearly as rapidly as a rough surface, and it is logical to assume that when in contact with hot gases it will not absorb as much heat either. It is therefore advisable to give a smooth machine finish to the whole interior surface of the combustion chamber. This can only be done if the valves are located in the cylinder head, and this valve arrangement is therefore a favorite one for air cooled motors. There is one other advantage in polishing the combustion chamber wall surface. It is found that spontaneous ignition or preignition in both water and air cooled motors is often caused by carbon deposits on the cylinder walls. Carbon is a poor conductor of heat and attains a very high temperature when adhering to the combustion chamber wall. When the wall surface is polished the carbon formed by the combustion will not so readily adhere to it, but will be blown out with the exhaust.

The temperatures of explosion and combustion depend directly upon the compression pressure. In an air cooled engine the compression, therefore, must be kept fairly low. A compression ratio of 4 to 1 is about the practical limit for air cooled motors, while a ratio of 5 to 1 is occasionally used on water cooled motors. Rich mixtures tend to heat the motor more than mixtures properly proportioned or somewhat lean, and it is, therefore, advisable to so arrange the carburetor that it is impossible for the driver to misadjust it so as to make the mixture over-rich. Quick evacuation of the cylinder at the end of the power stroke is also essential, and large size,

quick opening exhaust valves must therefore be used. The H. H. Franklin Manufacturing Company has employed auxiliary exhaust ports, as already described, for many years, but has recently given up their use. These auxiliary ports open much faster than ordinary poppet valves. It is also inadvisable to run on a late spark.

Radiating Surface—The combustion chamber wall disperses the heat which it absorbs from the burning gases by two methods, viz., by radiation and by convection. Suppose a current of air to be blown over the cylinder. Then any particle

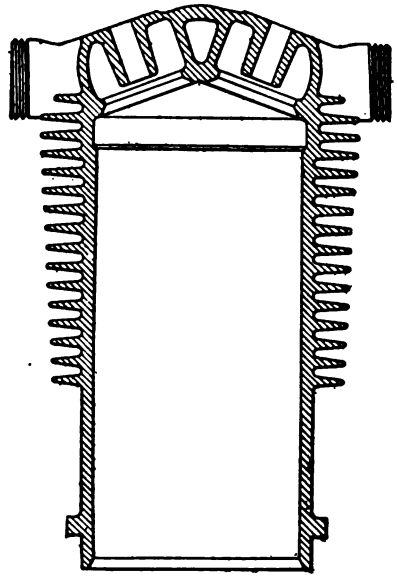

FIG. 334.—CYLINDER WITH COOLING FLANGES.

of air, on coming in contact with the hot cylinder wall, will have heat imparted to it and will carry this heat away with it. This is known as convection. There would also be convection of heat if no artificial air current was employed, since the air in contact with the hot walls, on becoming heated, expands and rises, thus carrying heat away with it. But there is some loss of heat from the cylinder walls at right angles to the direction of the air current or even directly opposed to it, and this is due to radiation. Convection is proportional

to the speed at which the air moves over the hot surfaces. Both radiation and convection depend upon the area of the surface exposed and to some extent upon the condition of this surface. It is therefore necessary, in order to effectively cool the combustion chamber, to make the outer surface of the cylinder wall as large as possible and to pass cool air over it at a rapid rate.

Form and Dimensions of Cooling Flanges—In very small motors, such as cycle motors, the only provision made for insuring effective cooling consists in increasing the radiating surface by providing the cylinder with cooling flanges or ribs. In a vertical motor these generally lie in a plane perpendicular to the cylinder axis, as shown in Fig. 334. In the smaller motors these ribs are generally cast integral with the cylinders. A mathematical investigation of the form insuring the most effective radiation shows that the flanges should be of what might be called razor blade section; that is, slightly concave on their sides; should run out into a knife edge, and there should be a sharp angle between adjacent flanges where they join the cylinder wall. Practical considerations dictate a somewhat difficult form, however (see Fig. 335. The section of the flange tapers down from the cylinder wall to the outer edge, about ⅛ inch per inch. This is required in order to make it possible to draw the cylinder pattern out of the mold, but it also possesses advantages from the standpoint of cooling, aside from approximating the shape of maximum radiating efficiency as just explained. Not as much heat needs to be conducted through sections of the flange near the outer edge as farther inward, and the section therefore can be reduced as the distance from the cylinder wall increases. The bottom of the groove between adjacent flanges is generally made semi-circular and the outer portion of the flange the same, in accordance with ordinary rules of design.

There is a considerable variation in design, but in small cylinders, say, not exceeding a bore of 3 inches, to which this form of cooling is now practically limited, the flanges are made about $\frac{3}{16}$ inch high per inch of bore and spaced ¼ to ⅜ inch. Frequently the flanges are made highest at the top end of the cylinder and of gradually decreasing height toward the bottom end.

Instead of casting cylinders with cast iron cooling flanges, sheet metal flanges are sometimes placed in the mold and cast into the cylinder walls. Again, the cylinders may be cast with cooling pins, sheet metal flanges may be slipped over

the machined cylinder or threaded radiating pins may be screwed into its walls in large number. All of these methods were applied at one period in the history of automobile development, but, owing to a seeming reversion of public favor to the water cooled motor, many manuufacturers who once built air cooled motors gave up air cooling. As the power output demanded by the buying public increased the problem of cooling the motors satisfactorily by air directly became more difficult, and, besides, the fact that four cylinder motors arranged vertically in a fore-and-aft direction under a bonnet in front became the favorite type introduced further complications. It was at first attempted to cool these motors by a blast of air created by a propeller type of fan located at the forward end of the bonnet, the blast being directed against the front cylinder. Under these conditions the different cylinders naturally were cooled very unequally, and it was found that in a four cylinder motor thus arranged and subjected to a blast of air from a fan located in front, cylinder No. 3 reaches the highest temperature.

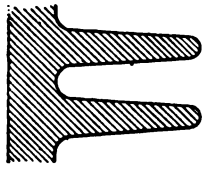

FIG. 335.

Blower Cooling—These different problems have been satisfactorily solved, however, by a system known as blower cooling.

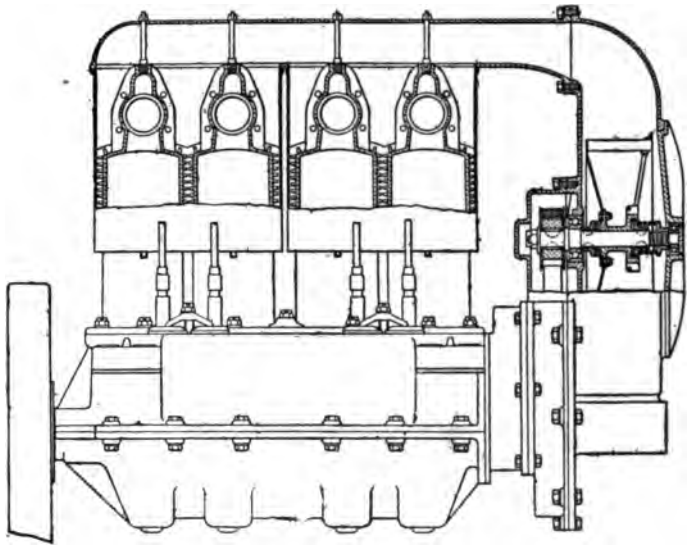

FIG. 330.—BLOWER COOLING SYSTEM.

The cylinders are formed with vertical flanges or cooling pins of relatively small height, and these are surrounded by an aluminum or sheet metal air jacket. The jackets of the individual cylinders connect on top to an air pipe leading to the outlet of a centrifugal fan or blower. In the Franklin motors the flywheel is made in the form of a centrifugal fan, while in the Kelly motor, illustrated in Fig. 336, a blower is located at the forward end of the motor. In this way a strong blast of cool air is directed against the heads of the cylinders which are heated the most, and the cooling effect is the same for all of the cylinders and all around each cylinder. This

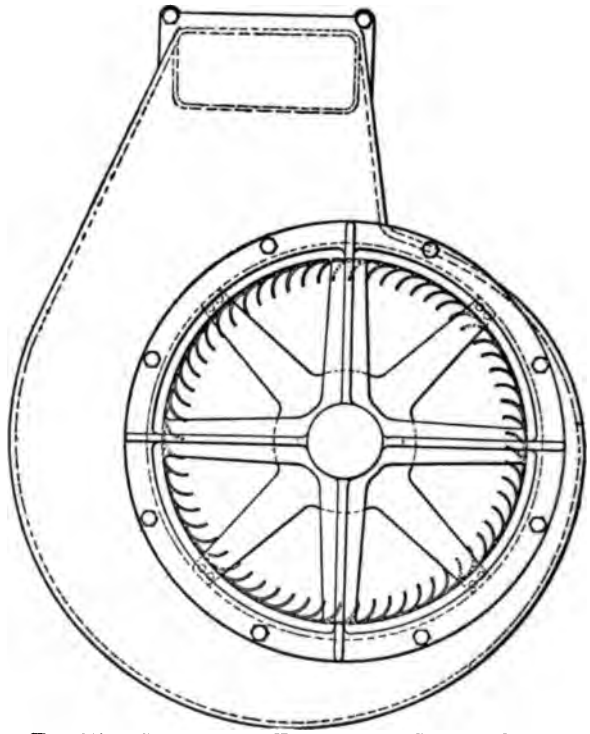

FIG. 337.—CENTRIFUGAL FAN FOR AIR COOLED MOTOR.

system resembles water cooling in many respects. There is this difference, however, that the air need not be stored, but is always and everywhere available in unlimited quantity. Leakage troubles and troubles due to freezing of the cooling water in winter are entirely eliminated. A further difference is that whereas with water cooling the cylinder wall tempera-

ture is limited to 212°, with air cooling it will generally be considerably higher than this, which has a favorable effect on the fuel economy. The temperature of the cylinder walls, of course, will depend upon the capacity of the blower.

The Blower—Suppose that a 25 horse power motor is to be cooled by the blower system. We may assume that the fuel consumption is 0.65 pound of gasoline per horse power-hour and that 40 per cent of the fuel energy is carried off by the cooling air. What must be the delivery of the blower at the full load speed of the motor? The heat energy to be carried off by the cooling air is evidently

$$\frac{0.65 \times 25 \times 19{,}000 \times 0.40}{60} = 2{,}060 \textit{ B. T. U. (appr.) per minute.}$$

Now, the specific heat of air at constant pressure is 0.24. Allowing for a rise of 100° Fahr. in the temperature of the air, the amount to be moved is

$$\frac{2{,}060}{100 \times 0.24} = 86 \textit{ pounds.}$$

Since atmospheric air weighs 0.077 pound per cubic foot, the amount to be moved is

$$\frac{86}{0.077} = \textit{practically } 1{,}120 \textit{ cubic feet per minute.}$$

The pressure against which this air must be moved depends upon the dimensions of the jackets.

A centrifugal fan or blower consists of two parts, viz., the casing, whose peripheral surface is of spiral shape, and the runner. The latter is a revolving wheel with numerous blades or vanes on its circumference which cause the air to revolve with the runner. The air enters through the open side of the casing (see Figs. 336 and 337), has a rotary motion imparted to it by the blades, is forced outward against the casing spiral by its centrifugal force, and because it strikes the spiral at an angle, is forced in the direction of the outlet. Centrifugal fans are high speed machines, and when gear-driven from the engine run at 2 to 2½ times crankshaft

speed. They may be driven either by belt or silent chain. When gears or chains are used it is necessary to drive through a friction clutch, owing to the great inertia of the runner, depending upon its high speed, which would throw heavy strains upon the drive and the runner itself if the motor were abruptly speeded up or loaded down.

Air Cooled Exhaust Valves—The exhaust valves in an air cooled motor—unless auxiliary exhaust ports are used—are subjected to unusually severe service, owing to the high tem-

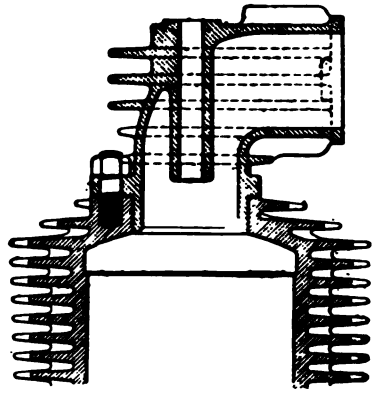

FIG. 338.—EXHAUST VALVE HOUSING.

perature at which they necessarily work. For this reason the use of valve cages inserted into pockets in the cylinder head has been found more or less impractical. It is a better plan to make the valve seats in the shape of an L fitting, one branch of which is bolted to the cylinder head and the other connected to the exhaust pipe, as shown in Fig. 338. These valve casings can be cast with cooling ribs so as to further increase the cooling effect.

CHAPTER XXIX.

MOTOR TESTS.

There are, essentially, two methods of testing a gasoline motor, viz., by means of a registering pressure indicator and by means of an absorption dynamometer. We will take up these two methods in succession, but will first briefly describe a method of determining the compression pressure and the explosion pressure in the individual cylinders of a multi cylinder engine.

It is sometimes attempted to determine the compression pressure in a cylinder by means of a pressure gauge connected to it directly, by turning the engine over by hand This method is very unsatisfactory, however, owing to the fact that when the engine is turned over slowly a slight leak may allow a great deal of the charge to escape, and thus the compression to drop much below its normal value at running speeds. Besides, when the cylinder walls are cold, a good deal of the heat generated by the compression will be absorbed by the walls, and this cooling effect will also reduce the compression pressure.

The Power Indicator—A device designed to enable one to determine the correct compression and explosion pressures is known as the Gibson power indicator, and is illustrated in Fig. 339. This instrument incorporates a pressure gauge indicating up to 300 pounds or more per square inch. At the bottom of the gauge proper there are a number of fittings, including an adjustable leak valve *A*, a check valve *B* and a four-way (for a four-cylinder motor) hand operated cock *C*. The action of the instrument will be readily understood by reference to the cut. At each explosion in the cylinder with which the gauge is put in communication by the four-way cock, a small quantity of burnt gases passes through the check valve *B* into the tube of the gauge, so that in an instant the pressure in the gauge is the same as the maximum pressure developed in the cylinder. The gases escape from

the indicator through the leak valve *A* at a considerably slower rate than they can pass to the indicator through the check valve *B*, so that the reading of the indicator will decrease with decreasing pressure in the engine, and the pointer will return to zero when communication with the engine is shut off. By means of the four-way cock the four cylinders of a four cylinder motor can be readily tested and any differences in their explosion pressures noted. The compres-

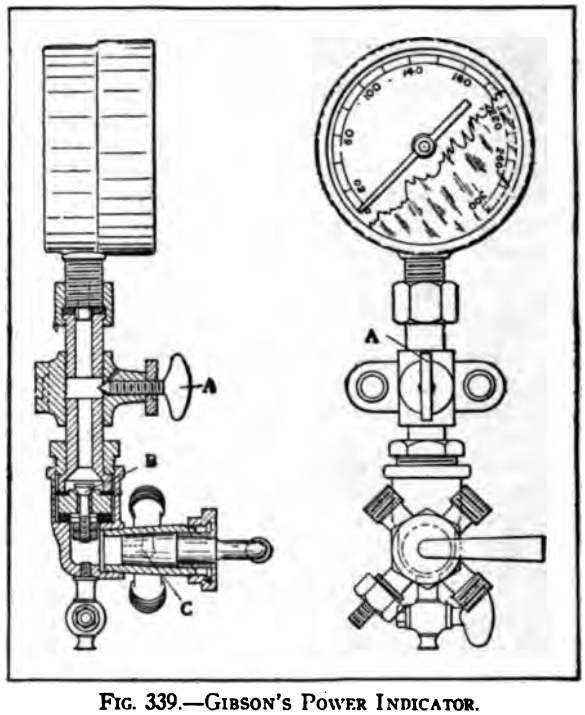

FIG. 339.—GIBSON'S POWER INDICATOR.

sion pressure in any cylinder can be determined by preventing ignition in that cylinder while the engine is running.

In the regular use of the device, when the engine is running, if the ignition be imperfect and misfires occur the action of the gauge hand will be erratic, the hand advancing a considerable distance and then slowly returning to the compression pressure. If ignition is perfect the beat of the hand will be regular and can be adjusted by means of the leak valve.

Piston Type Indicators—In studying the internal action in the cylinders of steam and slow speed gas engines use is made of a so-called engine indicator consisting of a small pressure cylinder which is placed in communication with the working cylinder, and a piston in this small cylinder with a piston rod connected through a suitable linkage with an arm carrying a pencil at its free end. As the pressure in the working cylinder rises and falls the pencil moves up and down the side of a small drum which carries a card of white paper. The drum is simultaneously rocked back and forth around the axis by connection with the crankshaft or some other moving part of the engine. The simultaneous motion of the drum and of the pencil produces on the card a co-ordinate diagram with abscissas representing piston travel and ordinates representing gas pressure. These diagrams were discussed at some length in Chapter III, and the principle of the indicator was shown diagrammatically in Fig. 5. Unfortunately these instruments, in spite of the greatest refinements, are practically useless above speeds of 500 revolutions per minute. This is due to the fact that the inertia of the piston and other reciprocating parts then becomes so great as to seriously affect the accuracy of the diagram.

The Manograph.—The manograph is an optical indicator in which the place of the pencil carrying arm is taken by a ray of light. This principle was first suggested by Prof. John Perry, but apparently the first manograph for the study of gasoline motors was made for Prof. E. Hospitalier, of the Ecole de Physique et de Chimie Industrielles, of Paris, by J. Carpentier, the well known instrument maker. It was first used in tests of motors exhibited at the alcohol exhibition in Paris in October, 1901. Since that time it has been further developed, and at present either it or the Schulze, a similar instrument, is used in nearly all automobile engineering laboratories of any pretension.

The construction of the manograph is clearly shown by the sectional views Figs. 340 and 341. In these figures *A* is the source of light. In the original instruments an acetylene light was used, but this proved rather unsatisfactory, and Mr. Gibson, the importer of the Hospitalier instrument in this country, substitutes therefor a hand-operated electric arc, a suitable resistance being connected in circuit with the arc so as to insure steady operation. A pinhole on the focusing slide *B* allows a practically parallel ray of light to pass into the interior of the instrument and fall upon the total re-

flection prism *C*. This prism reflects the ray of light onto the small concave mirror *D*, which reflects it onto a polished glass screen *E*, which forms one head of the box of the instrument. The mirror *D* is located in the centre of the opposite head of the box, and the length of the box is such that the focal point of the mirror coincides with the mat surface

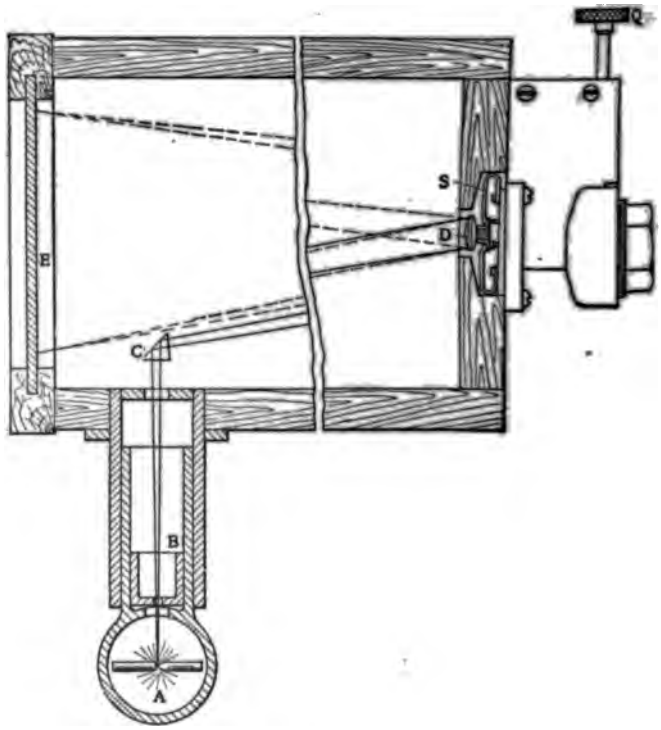

FIG. 340.—PART SECTIONAL VIEW OF HOSPITALIER MANOGRAPH.

of the ground glass screen. The resultant point of light is so small that its intensity is little, if any, less than the intensity of the light at the pinhole, and the motions of the point of light on the plate are easily followed by the eye, even in broad daylight.

Construction of the Instrument—The mirror is given a rocking motion in a vertical plane proportional to the fluctuations of the pressure within the engine cylinder and a rocking motion in a

horizontal plane proportional to the travel of the piston. Referring to Fig. 341, back of the mirror is a metal plate 1-2-3 in the form of a right angled triangle. This plate rests upon three supports, at its three corners, respectively. Point 1, at the right angle, is stationary in space. Point 2 is displaced perpendicularly to the plane of the mirror in proportion to the pressure, and point 3 is displaced proportionally to the distance traversed by the piston. Point 2 of the plate rests against the end of a steel rod *F*, the other end of which bears against the centre of a steel diaphragm *G* clamped between the cap *H* and plug *I*. From the plug *I* connection is made to the engine cylinder through a small bore copper tube, whereby the pressure acting on the cylinder is communicated to the diaphragm chamber *G*. The diaphragm is of such construction that the deflection of its centre is as nearly as possible proportional to the pressure acting upon it, and sometimes consists of two discs of different grades of steel whose errors compensate each other. Thus the point 2 of the plate back of the mirror will be moved a distance proportional to the pressure in the cylinder.

Point 3 of the plate back of the mirror rests against the steel rod *J*, the opposite end of which rests against one arm of a double armed lever *K*, whose other arm connects through a short connecting rod *L* to a small crank *M*. The shaft of crank *M* carries a spur pinion meshing with another spur pinion *N*, both pinions having the same number of teeth. Pinion *N* is connected through a flexible shaft *O* with the crankshaft of the engine under test. By means of the crank and connecting rod mechanism *LM*, the linear motion of the piston is reproduced on a reduced scale and impressed upon the sliding rod *J*. The mirror is constantly pressed against its three supports by the spring *S*. The reciprocating motion of the rod *J* must be absolutely in phase with the motion of the piston, and in order that this relation may be attained an adjusting device is provided which is arranged as follows: The shaft of pinion *N* has a bearing in the disc *P* concentric with the pinion *M*. This disc *P* is provided with worm teeth with which meshes a worm provided with a thumb-wheel *Q*. By operating the thumb-wheel *Q* the disc *P* can be moved around its centre whereby the angular relation of crank *M* to the engine crankshaft is changed. When the motion of the pin *J* is brought into absolute phase with that of the piston, the point 3 of the plate back of the mirror will be moved in direct proportion to the motion of the engine piston. The beam of light reflected by mirror *D* will then travel up and

down on the screen *E* proportional to the pressure in the engine cylinder and transversely across the screen in proportion to the motion of the engine piston. Owing to the per-

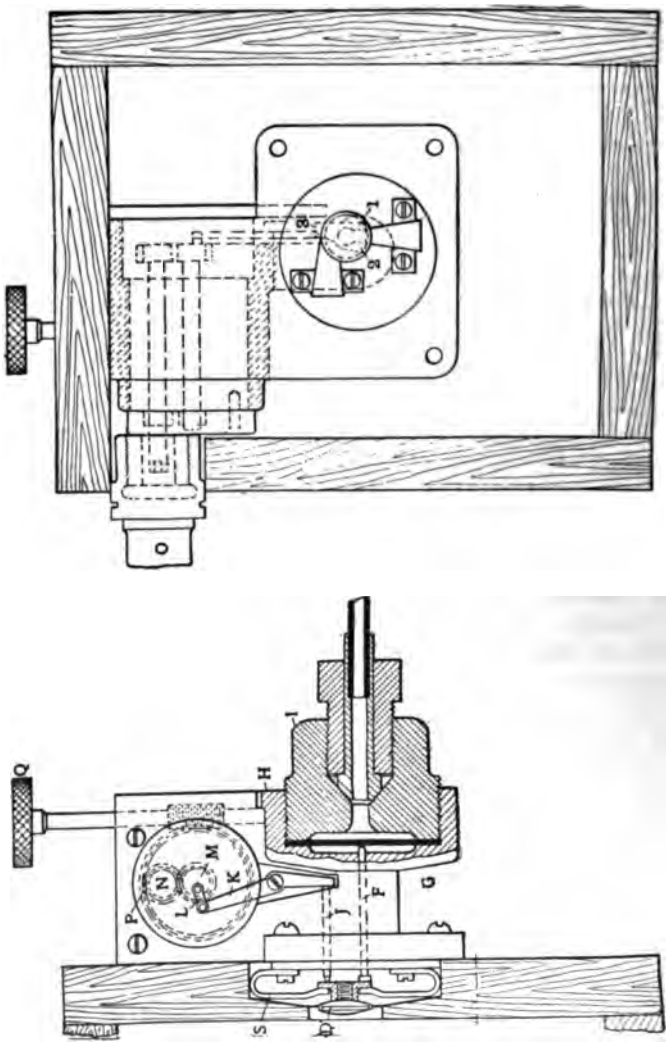

FIG. 341.—MECHANICAL DETAILS OF HOSPITALIER MANOGRAPH.

sistence of vision the diagram appears as a continuous line which may be examined conveniently or traced with a pencil on tracing paper. By putting a sensitized plate or film in the place of the ground glass plate, the diagram may be photo-

FIG. 342.—SINGLE CYLINDER HOSPITALIER MANOGRAPH.

graphed, and the photograph then used the same as the ordinary indicator diagram.

Sources of Error—There are several sources of error in this instrument which it may be well to point out here. In the first place, the piston motion is reproduced accurately only if the ratio between the length of connecting rod *L* and the throw of crank *M* is the same as the ratio of the engine connecting rod length to engine stroke. The length of connecting rod *L* in the instrument should therefore be changed in accordance with the ratio of connecting rod length to length of stroke in the particular engine under test. This, however, is impractical in actual work with the instrument. Another source of error resides in the flexible shaft and its connections, which will twist slightly in operation, and this twist will vary with the speed of the motor. This error can be corrected to a certain extent by means of the thumb-wheel adjustment *Q*. A further source of error lies in the copper tube connecting the engine cylinder with the diaphragm chamber. If this tube is made very small in diameter and of considerable length, its resistance to the flow of the gases may cause a difference in pressure to exist between the cylinder and the diaphragm chamber. On the other hand, if the tube is made of fairly large bore it has an appreciable effect on the capacity of the compression chamber, and if it is made very short a great deal of heat will be transmitted to the diaphragm chamber, which may affect the accuracy of the diaphragm. The Hospitalier manograph is furnished with a copper tube of ⅛ inch bore and about 3 feet in length. When a very short length of tube is used it is necessary to water-cool it. A single cylinder Hospitalier manograph complete is shown in Fig. 342.

Phase Adjustment—The first operation in making a manograph test, after the instrument has been set up and connected to the engine, consists in adjusting for phase equality. This, as already explained, is done by means of the thumb-wheel *Q*. Suppose that the engine is turned over by hand. Then during the compression stroke the pressure in the cylinder will rise to near the normal compression, and during the following down stroke it will drop practically along the same line. If there were no leakage and no interchange of heat between the gases and the cylinder walls the compression and expansion curves would absolutely coincide. As a matter of fact, supposing the cylinders to be tolerably airtight and to be cold, the compression and expansion

curves when the instrument is properly synchronized will be substantially as in Fig. 343. That is during the first part of the expansion the curve will drop a little below the compression curve, owing to the fact that heat is then absorbed by the cylinder walls from the gases, while during the latter part of the expansion the expansion curve will coincide with the compression curve. Therefore, when a diagram like Fig. 343. is obtained, the operator knows that the instrument is in phase with the engine. If the expansion curve falls much below the compression curve during the first part of the expansion is indicates cylinder leakage. When the engine is turned over while the communication between the cylinder and the diaphragm chamber is shut off, the spot of light describes a straight horizontal line on the screen, which

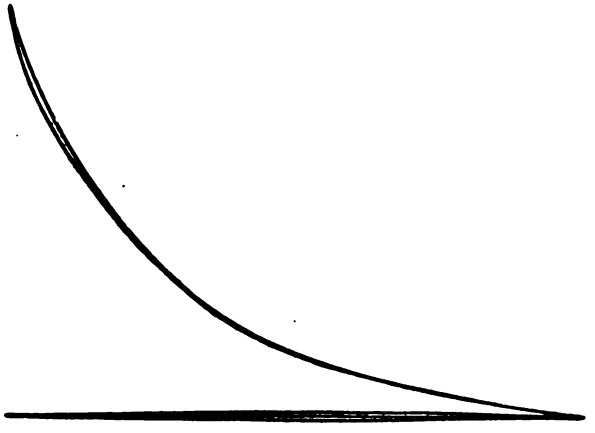

FIG. 343.—COMPRESSION DIAGRAM USED FOR ADJUSTING THE PHASE OF THE MANOGRAPH.

represents atmospheric pressure, and is known as the atmospheric line.

Studying Ignition and Combustion—In some investigations, however, it is advantageous to have the instrument out of phase with the engine, as, for instance, when trying to determine the relative rates of combustion of different fuel mixtures. This factor is indicated by the inclination of the explosion line in the diagram. When the instrument is adjusted in phase with the motor the explosion takes place while the rod *J* is stationary or nearly so, and any slight variation in the rapidity of combustion, therefore, does not

appreciably affect the diagram. On the other hand, if the instrument is adjusted so as to be 90 degrees out of phase with the engine, the piston, and, consequently, the rod *J* controlling the horizontal motion of the beam of light, will move at its maximum speed while the explosion occurs, and any variation in the rate of explosion is shown on a much larger scale. A diagram taken with the instrument out of phase by about 90 degrees is shown in Fig. 344.

Four Cylinder Manographs—For studying a multi-cylinder engine one manufacturer recommends the use of a multiple manograph for taking records from all of the cylinders simultaneously. If all of the cylinders are in the proper working condition, then the different diagrams taken at the same time should

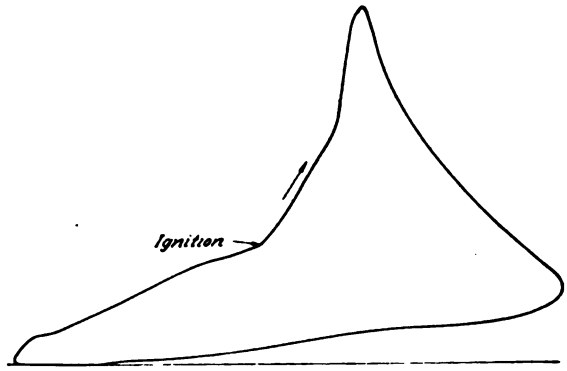

FIG. 344.—DIAGRAM TAKEN WITH CRANK MOTION 90 DEGREES OUT OF PHASE.

be absolutely identical. If any variations are shown in the diagrams it is then a comparatively easy matter to trace the cause of the irregularity. On the other hand, if all of the cylinders were indicated with a single instrument connected to one cylinder after another, the working conditions might change during the interval between successive records, so that the different diagrams would no longer be directly comparable. Fig. 345 shows a four cylinder Schulze manograph complete.

There is, however, something to be said in favor of the use of a single instrument on engines with any number of cylinders. No two diaphragms are absolutely identical in their actions and when the cards from the different cylinders are taken with different instruments, the differences in the diaphragms may be responsible for some of the differences in the diagrams. More-

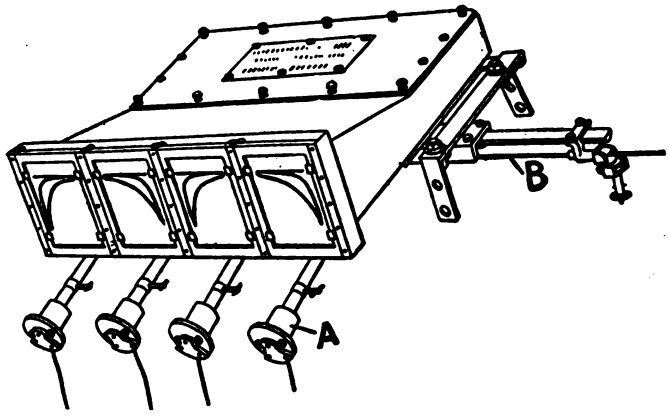

FIG. 345.—FOUR CYLINDER SCHULZE MANOGRAPH.
A, source of light (Nernst lamp); B, transmission of crank motion.

over, by means of bayonet joints the single instrument can be very quickly disconnected from one cylinder and connected to the next.

Use of Manograph—One use of the manograph consists in determining the indicated horse power. By subtracting the brake horse power from the indicated horse power, the internal friction losses and the mechanical efficiency of the motor are found.

The area enclosed by the compression and expansion curves represents work done upon the piston by the expanding gases. In case portions of the exhaust and compression curves and the suction curve form a loop, as they usually do,

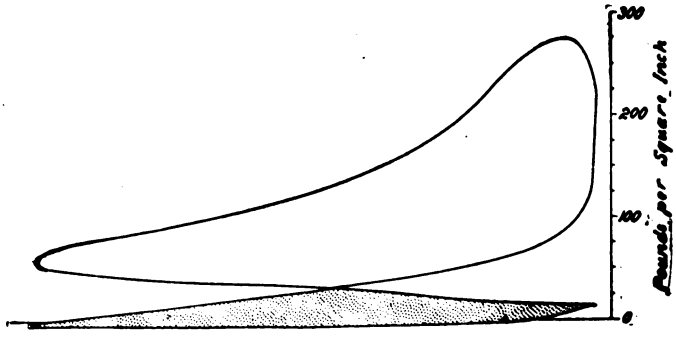

FIG. 346.—HIGH EXHAUST BACK PRESSURE.
(Shaded area represents negative work.)

the area enclosed by them (the shaded area in Fig. 346) represents negative work and must be subtracted from the positive work represented by the area enclosed by part of the exhaust and compression curves and the expansion curve. In order to find the indicated horse power it is necessary to determine the mean height of the diagram. After the mean height of the positive work area and the mean height of the negative work area have been determined and their difference has been taken, the mean effective pressure is found by multiplying this difference by the scale of the diaphragm, which is generally expressed in pounds per square inch per inch. The power developed by the cylinder from which the diagram was taken may then be determined from the formula

$$I.H.P. = \frac{M.E.P. \times \pi b^2 \times 2l \times n}{4 \times 4 \times 12 \times 33\,000} = \frac{\pi b^2 l \times M.E.P. \times n}{3\,168\,000},$$

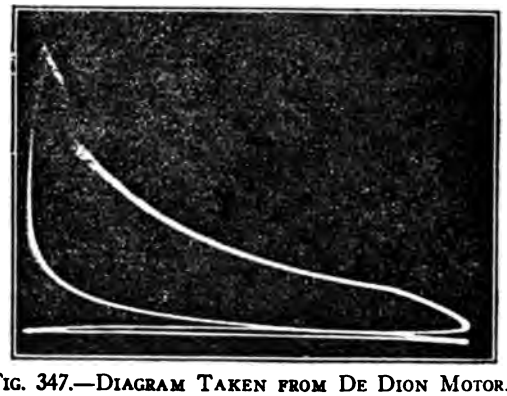

FIG. 347.—DIAGRAM TAKEN FROM DE DION MOTOR.

where *M. E. P.* is the mean effective pressure as determined from the diagram; *b* the bore of the cylinder in inches; *l* the length of stroke in inches and *n* the number of revolutions per minute. The speed of the engine must be taken at the same time as the diagram, if the indicated horse power is to be determined.

The other and, perhaps, the most important use of the manograph consists in determining faults in the operation of the motor due to defective valve setting, ignition, carburetion, etc. If the engine works under the proper conditions it gives a diagram very closely approximating the ideal diagram,

as discussed in Chapter III. From the known data of the cylinder under test such a diagram may be drawn, and the diagram obtained by means of the instrument may then be compared with it.

A very good diagram is shown in Fig. 347. This was taken by Joseph Tracy with a Schulze manograph, using a Nernst lamp as the source of light, from a single cylinder 3½ h. p. De Dion motor. The maximum pressure indicated is 218 pounds per square inch, and the mean effective pressure 59.8 pounds per square inch. The diagram was taken at 1,322 r. p. m. of the motor, and the indicated horse power is equal to 2.4.

Fig. 348 shows a diagram taken with the Schulze manograph

FIG. 348.—DIAGRAM TAKEN FROM FRANKLIN AIR COOLED MOTOR.

from a Franklin air cooled, four cylinder motor with auxiliary exhaust ports. This also corresponds closely to the ideal form. A striking feature of this diagram is the sharp deviation of the expansion line at the point where the auxiliary exhaust port begins to open. However, Fig. 347 shows that a quite similar effect can be obtained with the ordinary mechanically operated exhaust valve, provided it is opened early enough. An example of the effects of an obstructed exhaust and consequent high back pressure during the exhaust stroke is seen in Fig. 346. This diagram is taken from a paper read before the Society of Automobile Engineers, descriptive of some tests made at Cornell University, and it is believed that the high back pressure was due to the fact that in the test

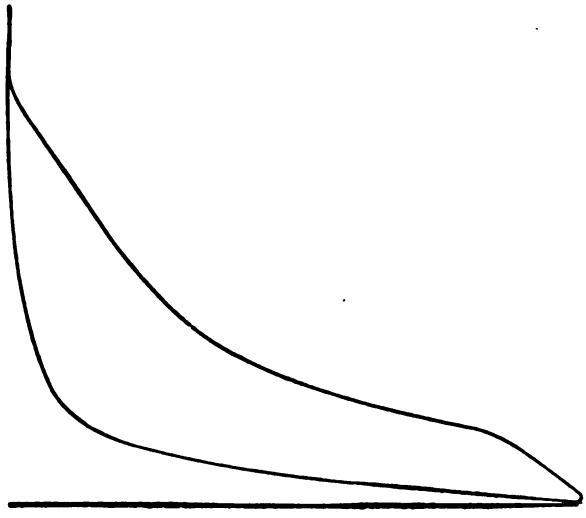

FIG. 349.—DIAGRAM SHOWING PRE-IGNITION.

a muffler was connected to the engine very close to the exhaust valves.

A diagram indicating too early ignition (pre-ignition) is shown in Fig. 349, and a diagram indicating late ignition in Fig. 350.

Fig. 351 shows a diagram taken from one cylinder of a six cylinder motor in which, owing to the firing order and the arrangement of the exhaust manifold, there was a transference of dead gases from one cylinder to another. As already explained in a previous chapter, the little loop at the left hand side indicates this blowing over. The explosion and expansion lines indicate a slow burning mixture, which may be due either

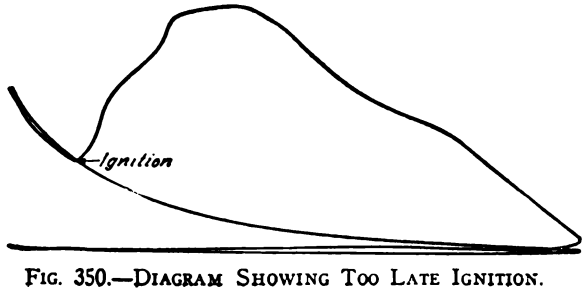

FIG. 350.—DIAGRAM SHOWING TOO LATE IGNITION.

to excessive dilution of the charge with dead gases, to poor carburetor adjustment, or to both.

Manographs are usually furnished with two different sets of diaphragms, one a high pressure set for indicating the cylinder while in regular operation, and the other a low pressure set for studying the action of the valves, with the ignition cut off. The Schulze manograph is furnished with a diaphragm giving a scale of 3 mm. per kilogram per square centimetre (one inch per 120 pounds per square inch) for the regular working stroke, and a diaphragm giving a scale of 10 mm. per kilogram per square centimetre (one inch per 36 pounds per square inch) for compression diagrams.

The ground glass screen of the manograph is generally so arranged that a photographic plate holder can be inserted in its place. However, Mr. Gibson has devised a more convenient method for photographing the diagram. This consists in attaching a Premo film pack to the frame of the screen. Adjustments on the engine are made while the ground glass screen covers one end of the instrument so that the diagram can be seen upon it, and when the proper shape of diagram has been obtained the frame is shifted to one side so that the film pack covers the end of the box. The taking of a photographic diagram is then the work of an instant. A photographic shutter inserted between the source of light and the mirror insures that the pressure variations of only one cycle are inscribed upon the photographic plate, so that the diagram gives an accurate record of that cycle. In conjunction with this shutter a very strong source of light is required, since the spot of light travels over the sensitized plate only once and considering the spot of light to be 1-64 inch in diameter it can be easily figured out that the light has less than one ten-thousandth of a second to act.

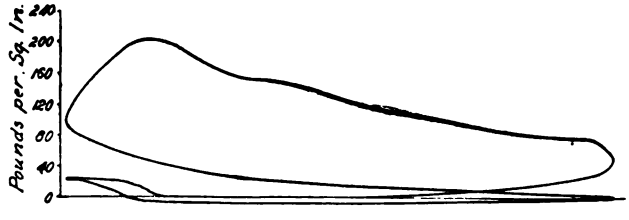

FIG. 351.—DIAGRAM SHOWING SLOW COMBUSTION OF DILUTED CHARGE.

Dynamometers—The manograph is of use chiefly in determining improper gas flow, which as a rule is due to defects in construction. It is mainly a laboratory instrument, and is used only on engines while being developed experimentally. In connection with such problems as the best valve timing, sizes of valves and sizes and location of ports in two cycle motors, the manograph may render valuable service. However, the chief aim in motor development is always increased brake horse power, and for this reason the testing device most generally used and which is applied to every motor turned out, is some form of power brake or dynamometer which enables the tester to determine the power output directly.

An apparatus for determining the power output of a motor is known as a dynamometer. Dynamometers are divided into two classes, viz., absorption dynamometers, which absorb and dissipate the energy output of the motor, and transmission dynamometers, which are inserted between the motor and its load and do not absorb any part of the motor output. All of the dynamometers which are practically employed for testing automobile motors are of the first kind, i. e., absorption dynamometers. The most primitive form is known as the Prony brake.

The Prony Brake—This consists of a pair of blocks which can be applied to the rim of the flywheel or of a pulley secured to the flywheel or crankshaft, with adjustable pressure. The friction between the blocks and the pulley will absorb the output of the motor and convert it into heat. The blocks are secured to an arm whose other end rests upon the platform of a beam scale or is attached to a spring scale. Referring to Fig. 352, when the motor rotates in the direction indicated by the arrow, it will cause the scale to indicate a pressure. This pressure is due partly to the friction of the blocks on the drum and partly to the weight of the arm. Since it is desired to determine the friction alone, either a correction must be made for the weight of the arm resting on the scale or else the effect must be eliminated by providing a counterweight on the side opposite the arm, so the brake balances around the centre of the bore of the brake blocks.

Let the radius of the drum be r and the distance of a vertical line through the point of contact on the scale, from the centre of rotation, D. Then, when the motor is running and the scale indicates a pressure W, the friction at the circumference of the drum is evidently $\frac{D}{r} W$. If the speed of revolution of the motor be n, then the rubbing speed at the rim of the pulley or flywheel is $2 \pi r n$ inches per minute, and the power dissipated in friction is

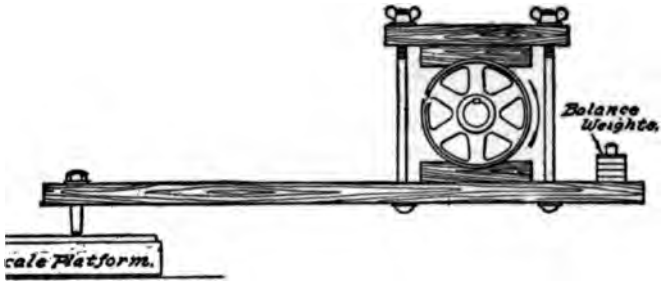

FIG. 352.—PRONY BRAKE.

$$H.\ P. = \frac{D}{r} W \times \frac{2\pi r n}{12 \times 33{,}000} = \frac{D W n}{63{,}025}$$

The Prony brake is not a very practical instrument. Some difculty is experienced in carrying off the heat generated quickly iough. This problem is generally solved by using a pulley with rim with inwardly turned flanges on both sides and directing stream of water into the pulley. The friction at the circumrence changes almost continually, owing to wear and to the cpansion due to heating, and for this reason it is not possible extend Prony brake tests over considerable periods under fixed onditions.

The Rope Brake—An imroved form of friction brake the rope brake. The type lustrated in Fig. 353 is recomiended by the American Soiety of Mechanical Engineers. this brake the friction tends lift the weight, and is ieasured by the difference beveen the weight W_1 and the cale reading when the pulley turning. The load is autoiatically adjusting, which iakes this brake better suited accurate tests than the 'rony brake. The calculation f the power obtained in a est with this brake is similar the calculation for the 'rony brake. The difference etween the weight W and the

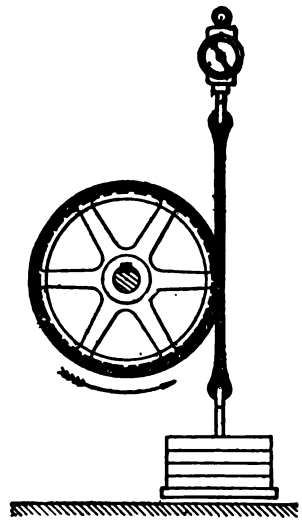

FIG. 353.—ROPE BRAKE.

indication of the scale is the equivalent friction at the centre of the rope, and the power may therefore be found in the most convenient way by supposing the friction surface to be at the centre of the rope. For use where the distance of the pulley or flywheel from the floor is not sufficient to allow of the use of a brake of the type illustrated, the Society of Mechanical Engineers recommends a similar type comprising a double armed lever hung from the ceiling. The weight is hung from one arm of the lever and to the other arm is attached the rope, which, after being wound around the pulley or flywheel, is attached to a spring scale anchored to the floor at some distance from the pulley.

The Fan Dynamometer—The fan dynamometer, which was first introduced in 1902 by Colonel Renard, of the firm of Panhard & Levassor, of France, consists merely of a wooden beam bolted to the end of a horizontal shaft and carrying two square discs of aluminum, which may be moved farther in toward the shaft or farther out from it, as desired. Small sizes of the dynamometer may be mounted directly upon the crankshaft of the engine to be tested, but in the larger sizes it is preferable to fix the beam to a special shaft which is mounted in ball bearings in a bearing housing bolted to a supporting frame. At its free end this shaft is provided with a member of a universal joint, so it can be connected to the crankshaft by means of an intermediate shaft and two universal joints. The advantages of a dynamometer of this type, as compared with a Prony brake, are obvious. The resistance does not change as the test proceeds, and the problem of keeping the device from overheating does not arise.

As the dynamometer was originally constructed by Colonel Renard the beam was made of ash and provided with two aluminum discs secured by two bolts each. To allow of the distance of the discs from the centre line of rotation being varied, each arm of the beam was drilled with eleven bolt holes, equidistant from each other. These eleven holes admitted of ten different positions of the discs. Ten intermediate positions were obtainable by means of extra holes in the discs, as shown in Fig. 354. The distance between holes was 5.5 centimetres (2.2 inches), the total length of the instrument 52.8 inches, and the complete weight 26.4 pounds.

The resisting torque of a fan dynamometer is proportional to the square of the angular velocity, and the power absorbed to the cube of the angular velocity. Both the resisting torque and the power absorbed are also proportional to the density of the

atmosphere, which varies with the thermometer and barometer readings. This type of dynamometer is particularly valuable for adjusting a motor. A position for the disc is first found experimentally which allows the motor to run at about its normal speed. Then the tester begins to make his adjustments, and any improvement in the adjustments is indicated by an increase in

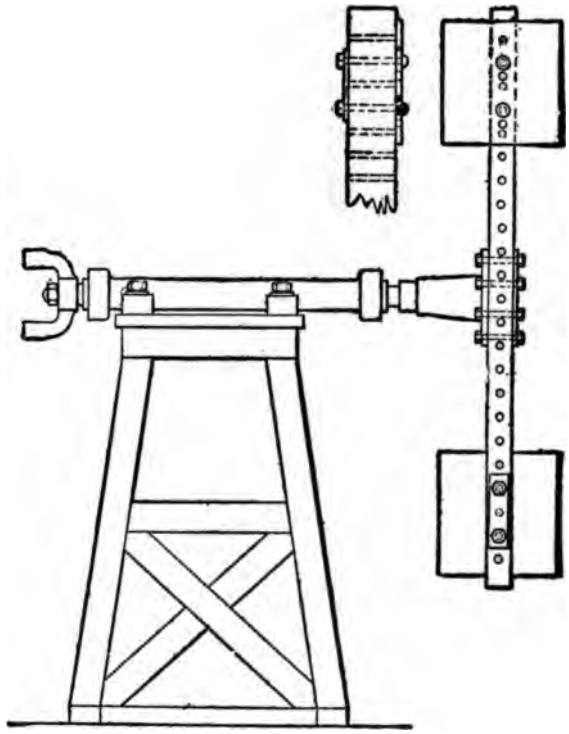

FIG. 354.—RENARD FAN DYNAMOMETER.

the speed of the motor. When it is desired to rapidly test a considerable number of motors of the same size, the best position of the fan discs is first determined. All of the motors should run at the same angular speed, and if any motor fails to come up to the speed shown by the others, it is a sign that it is defective in some way.

It has been proved both by calculation and by experiments that

for fans of proportional dimensions throughout the power coefficient varies as the fifth power of the ratio of linear dimensions. This law was verified by means of experiments with two instruments the linear dimensions of which bore to each other the ratio of 2.2. The fifth power of 2.2 being equal to 51.54, the coefficient of the larger dynamometer should be equal to that of the smaller one multiplied by 51.54. In spite of the inevitable experimental errors and inaccuracies of construction, this relation was found to hold very well for all positions of the discs on the beam.

When a dynamometer is constructed with dimensions of revolving parts bearing to each other relations different from those given in the table below, it is necessary to calibrate the instrument by means of some standard form of dynamometer. Then, when it is desired to build larger or smaller instruments and adhere to the same proportions of parts, all that is necessary is to multiply the power factor found for the first instrument by the fifth power of the ratio of the linear dimensions in the original and new instruments respectively. Colonel Renard found a difference of less than one-half of 1 per cent. in the power indications of a number of dynamometers of the same size constructed with ordinary care, and he expressed a belief that with all-metal construction the difference would be smaller. The relative dimensions of the parts of the Renard fan dynamometer, expressed as a function of the modulus a (distance between adjacent bolt holes), are as follows:

Distance between holes	a
Length of beam	$24\,a$
Thickness of beam	a
Width of beam	$2\,a$
Side of square discs	$60/11\,a$
Thickness of discs	$4/55\,a$
Diameter of bolts	$10/55\,a$
Diameter of shaft	$40/55\,a$
Number of holes in each arm of beam	11
Distance from the centre to the outermost hole	$11\,a$

The maximum power for which a dynamometer of this kind may be used is determined by the limit of speed at which the law of proportionality of the air resistance still holds and by the limit of fibre stress in the beam. In experiments a peripheral velocity of 328 feet per second has been obtained, but it is possible that the law of the square of the speed holds at still higher velocities. The fibre tension in the beam, on the other hand, is limited to 1,400 pounds per square inch, which with selected ash

wood gives a safety factor of 7 to 8. By combining these two conditions the limits of the range of a given dynamometer are easily determined, as regards both angular speed and power. It can easily be demonstrated that all fans of proportional dimensions have the same factor of safety when running at the same peripheral speed. This equality of the safety factor applies not only to the beam but also to the discs, the bolts and the shaft.

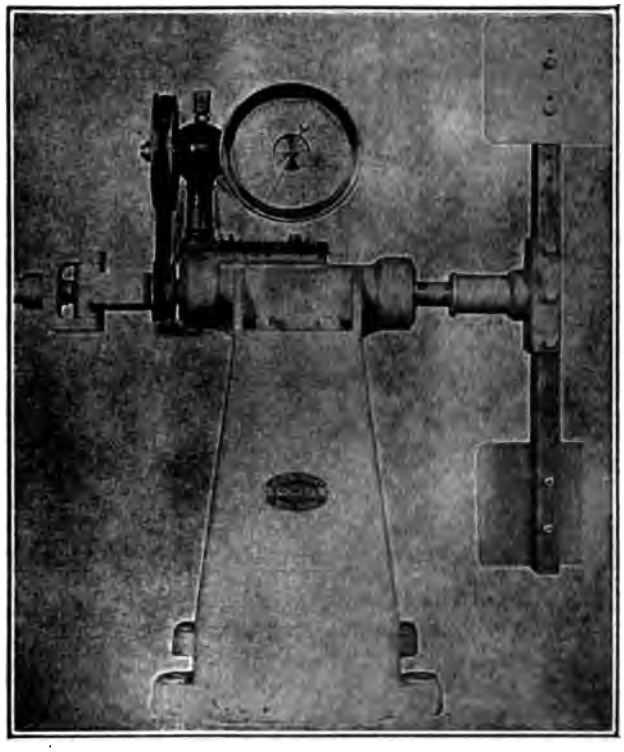

FIG. 355.—TRACY FAN DYNAMOMETER.

An improved type of fan dynamometer is made by Joseph Tracy, of New York, and is illustrated in Fig. 355. It has a metal base and is provided with a tachometer and power indicator, the instrument having two scales, reading in revolutions per minute and horse powers respectively. In the regular use of a fan dynamometer the fan must be covered with a heavy wire screen for the sake of safety.

If a steel beam is used in a fan brake, of a section comparatively narrow and long, the power absorbed will be substantially proportional to the area of the movable plates and to their distance from the axis of rotation. Furthermore, if the beam is slightly offset at the centre where it is secured to the shaft, so that the two plates are both in the same plane through the axis of the shaft, then when the beam is drilled with equidistant holes the increase or decrease in the centre distance of the plates from the

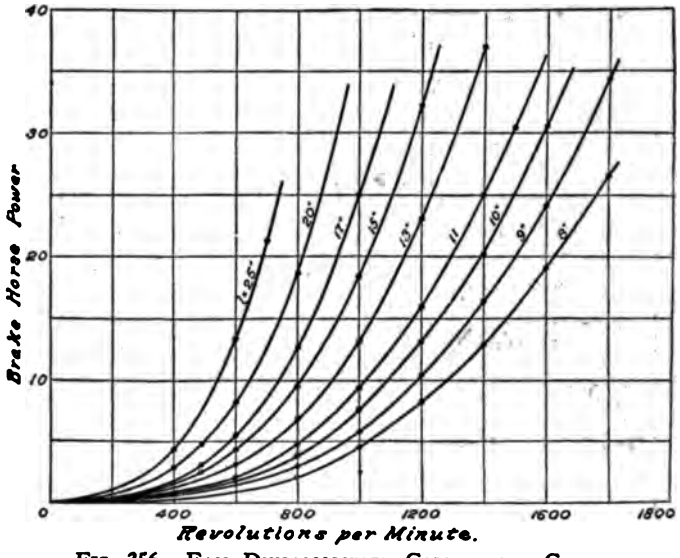

FIG. 356.—FAN DYNAMOMETER CALIBRATION CURVE.

axis of rotation as the plates are moved farther out or in will be proportional. The theory of such an instrument, therefore, will be somewhat simpler than that of the wood beam fan. However, the relation between the power absorbed and the position of the plate on the beam is a very complicated one, and it is usual practice to determine the power absorbed by such a dynamometer for the different positions of the plates experimentally and prepare a set of curves from which the horse power absorbed at any given speed of revolution and any given position of the plates can be read off directly. Experiments conducted

by Prof. W. Morgan and E. B. Wood, of England, have shown that the horse power absorbed varies directly as the third power of the number of revolutions per minute, and the calibration curves shown in Fig. 356 bear out this result. The latter apply to a fan dynamometer of the type described above, with steel beam, with plates 12 inches wide by 8 inches radial depth. The figures on the individual curves denote the radial distances from the axis of rotation to the geometrical centre of the plates.

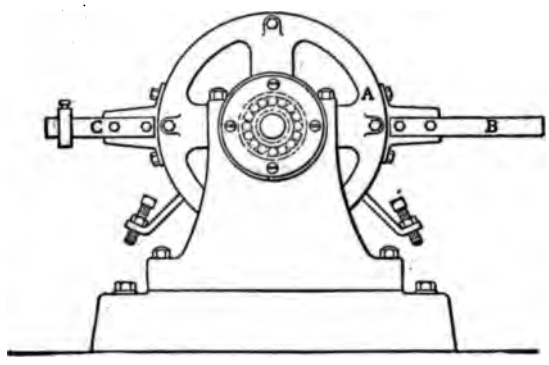

FIG. 357.—CRADLE DYNAMOMETER.

Electric Cradle Dynamometer—Perhaps the most practical device for making accurate horse power tests on a motor is the electric cradle dynamometer. This consists of a dynamo of the circular field frame type. The field frame, instead of being rigidly bolted to the base or cast integral therewith, is supported in two large radial ball bearings on pedestals rising from a cast iron base. The armature shaft is connected to the shaft of the motor to be tested through a flexible coupling. A sketch of such a dynamometer is shown in Fig. 357. When the armature is rotated by the gasoline motor it exerts a turning effort on the field frame *A* and tends to carry the latter around with it. Two radial arms extend from the field frame, one, *B*, for measuring the pull exerted by means of a scale, and the other, *C*, for balancing the former. Current is induced in the armature of the generator, the same as in the ordinary dynamo, and this may be used in lighting up a bank of incandescent lamps or it may be dissipated in a water rheostat. The pressure exerted by the lever arm on the scale is equivalent not only to

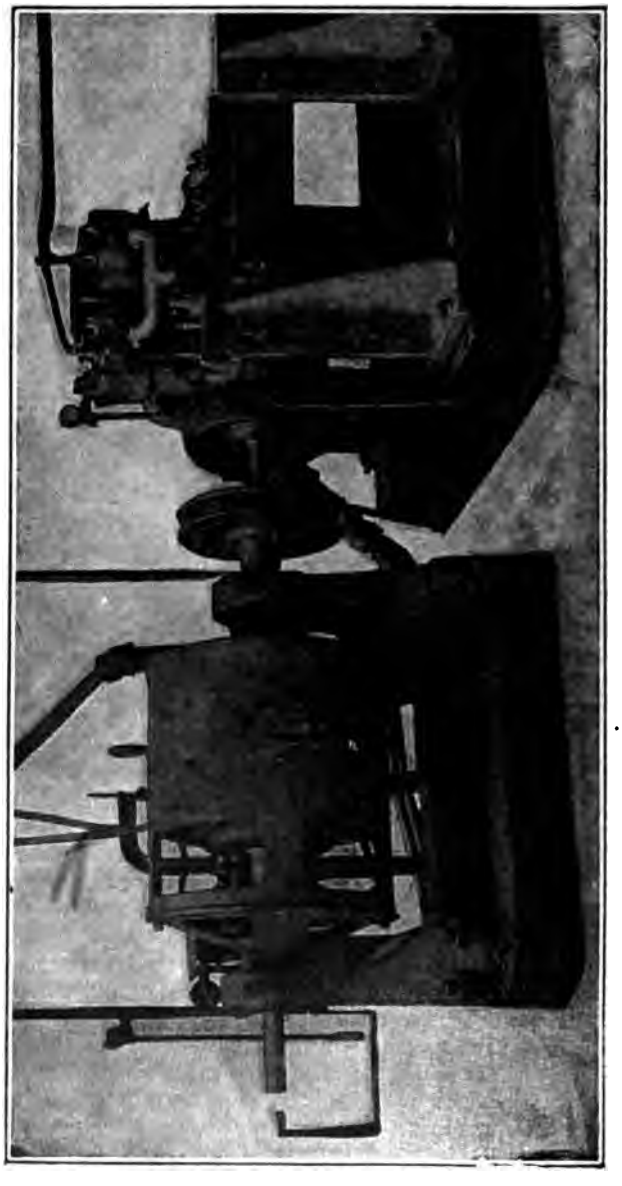

FIG. 358.—ELECTRIC CRADLE DYNAMOMETER IN A. C. A. LABORATORY.

the electromagnetic reaction between the armature and field frame, but also to the armature bearing friction and the commutator brush friction, and the only item not included in this pressure is the friction in the ball bearings supporting the field frame, which is negligible, however. The method used in connection with such a dynamometer for calculating the horse power is exactly the same as that used in connection with the friction brake, and the same formula can be used, i. e.,

$$H.\ P. = \frac{D\,W\,n}{63{,}025}$$

As in the cases of all other dynamometers, torque and speed measurements must be made simultaneously, and for this reason a tachometer is generally mounted on top of the dynamometer.

Fig. 358 shows a dynamometer installation at the laboratory of the Automobile Club of America by the Diehl Manufacturing Co., of Elizabeth, N. J. The installation comprises a large cast iron base with adjustable standards to take motors of all sizes, an electric cradle dynamometer and a switchboard. The dynamo has a capacity of 64 horse power at 2,000 revolutions, but will stand an overload of 90 horse power at 1,500 revolutions per minute for short periods of time. The dynamometer arm in this case is 3 feet long, measured from the centre of the dynamo, and is provided with a knife edge, to insure absolute correctness of the length of the effective lever arm. A feature of the dynamo is that it is provided with commutating poles, the object of which is to prevent sparking at the commutator under all conditions of load without adjustment of the brushes. The dynamo is also capable of operating as a motor, and by means of a starting rheostat on the switchboard can be used to start the engine.

The electrical energy developed during a run is dissipated in the resistance boxes, and in case of necessity a water rheostat may be used in addition. These resistance boxes are controlled by individual switches mounted on the lower part of the switchboard, and the load can be varied from 5 amperes at 220 volts (slightly over one horse power) up to the maximum capacity of the machine. In the centre of the switchboard, Fig. 359, are rheostats for coarse and fine adjustments, respectively, the two being connected in series. It is claimed that the resistance can be so finely adjusted that it is possible to keep the beam of the scale in a floating position. A voltmeter and an ammeter fitted to the sides of the switchboard on top give indications from which the output of the dynamo can be calculated, and if the efficiency of the dynamo at different outputs is known, the input.

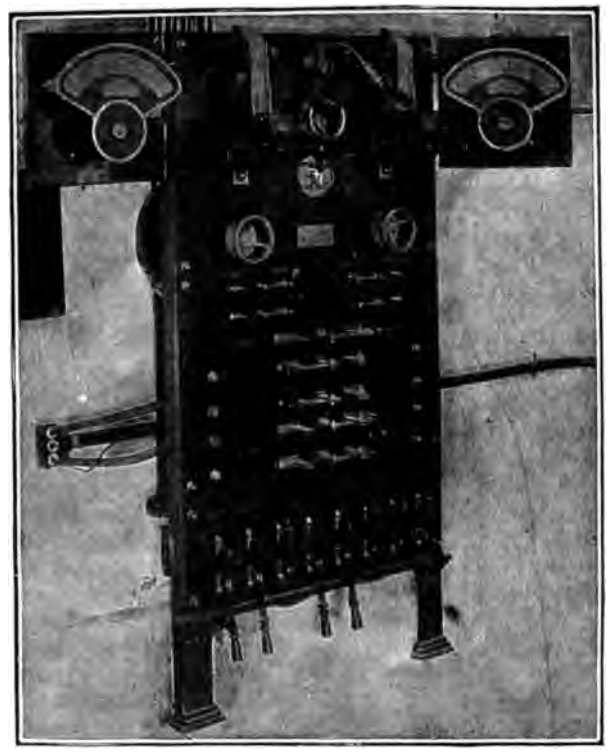

FIG. 359.—SWITCHBOARD OF DYNAMOMETER INSTALLATION.

which is equal to the output of the motor under test, can also be ascertained electrically, thus furnishing a check on the mechanical determination of the power.

Hydraulic Dynamometers—Another type of dynamometer used in testing automobile motors is the hydraulic dynamometer. One of these instruments, as used in the plant of the American Locomotive Works, Providence, R. I., is shown in Fig. 360. The instrument comprises a stator and a rotor. The rotor consists of four steel discs, 40 inches in diameter and ¼ inch thick, securely keyed to a substantial shaft driven from the motor under test through a universal jointed shaft and multiple disc clutch. The brake discs revolve in four separate compartments within the casing, but clear the walls in all directions by ⅜ inch, the only metallic contact between the rotor and the stator being in the

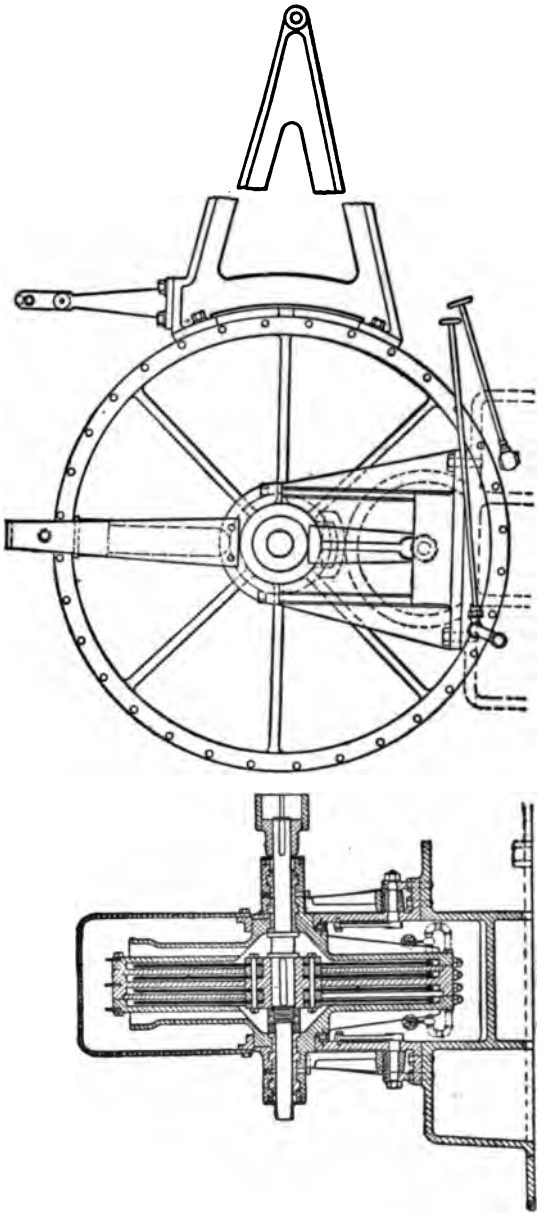

FIG. 360.—ALCO HYDRAULIC DYNAMOMETER.

bearings which carry the shaft. The casing is free to revolve through a small angle and its motion is practically frictionless, owing to the special method of mounting it. An arm projects from the periphery of the casing, the end of which is linked to a steel beam supported on knife edges by a pillar in the same manner as the beams of platform scales, the whole forming a compound lever which is balanced by means of an adjustable weight. The scale beam is graduated to read pounds, and by means of a vernier, tenths of pounds, a sliding weight being moved along the beam by means of a screw and hand wheel so arranged as not to disturb the balance. The leverage of the beam is so calculated that at 1,000 revolutions per minute one pound represents one horse power. Thus the horse power can be read off directly at 1,000 revolutions per minute, and at other speeds it can be obtained by simply multiplying the weight by the speed and dividing by 1,000.

When it is desired to make a brake reading, the rotor is first engaged by means of the multiple disc clutch. Water is then admitted to one of the end compartments near the shaft, and its flow regulated by an ordinary globe valve. Centrifugal force carries the water out to the periphery of the disc, and creates a high pressure, the water then serving as a friction medium between the steel disc and the walls of the compartment. As a result, the casing tends to rotate with the disc in direct proportion to the friction, and hence to the torque. Whatever friction results from the rotation of the shaft in the bearings of the brake casing has a tendency to revolve it in the same direction; therefore, the entire power developed by the motor is accounted for by the weighing apparatus, which counteracts the tendency of the casing to rotate.

If one disc or compartment is not capable of absorbing the total power of the motor, the compartment at the other end of the casing can be brought into service, and the water in these compartments may be transferred to the inner compartments by means of by-pass valves, thus bringing all four discs into use in absorbing the maximum power of which the brake is capable. By varying the quantity of water in the compartments a very flexible control is obtained. This is done by regulation of the inlet and outlet, or drain, valves. The mechanical energy of the motor is converted into heat inside the brake and is carried off by the water, the temperature of which is usually kept below 150 degrees Fahr. The brake water, as well as the jacket water, can be cooled in a radiator and used over and over.

Fuel Consumption Tests—In developing a motor experimentally as well as in determining the effect of different carburetors, carburetor adjustments or ignition equipments, it is often desirable to make a test of the fuel consumption of the motor. This is readily accomplished by means of a graduated fuel tank, as illustrated in Fig. 361. Tank *A* is made of sheet metal, and is of small but uniform cross section, so that if a certain amount of fuel is drawn it will make quite a difference in the level of the fuel. The supply pipe leading to the carburetor leaves the tank at the bottom, and an extra outlet with a nozzle *B* may be provided, which is convenient for filling a priming can. The glass tube *C* is connected to the tank at its upper and lower ends, and is graduated in pounds by means of a paper or linen scale pasted to it, or a wooden scale firmly fastened back of it. The difference between the scale readings at the beginning and end of a run gives the fuel consumption during the run. Under ordinary conditions the lever cock *D* inserted in the feed pipe of the graduated tank remains open, the fuel then merely passing through the tank, but when a fuel test is to be made this cock is closed and at the same time the tank is vented so as to prevent the formation of a vacuum as the level of the fuel in the tank drops.

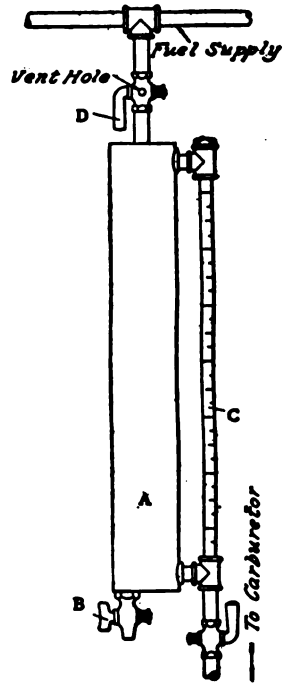

FIG. 361.—GRADUATED FUEL TANK.

A distinction must be made between testing motors in the experimental development of the design and testing the regular factory product. In the former case great accuracy is essential, and methods may be employed which would be impractical in the regular testing of the stock product.

"Running In"—After the motor is assembled it is first submitted to a process known as "running in," which consists in limbering up the bearings by running it from a separate source of power for from two three hours. With the small clearances

allowed for in the bearings, pistons, etc., the motor, after assembling, is usually very stiff, and may require as much as 50 to 60 per cent. of its normal power output to run it. All of this power is converted into heat, and in order that the heat may be carried off rapidly from the bearings where it is generated, and that cutting at the bearing surfaces may be prevented, the motor is flooded with oil, the crank case being filled with a heavy grade of oil to a much greater height than in regular operation. For this test the motor is not piped up and the caps over the valves are left out. Some of the oil will be forced out through the exhaust plug openings and spark plug holes, etc., and in order to prevent waste of expensive oil it is a good plan to cover the motor with a sheet metal hood and place an inclined pan under it, so that all oil blown out will be caught and collected in a tank placed underneath the lower end of the inclined pan.

After the bearings have been run in the motor is connected up with a gasoline tank, ignition outfit, water supply, etc. Gasoline tanks and ignition outfits are usually secured to the wall or to standards near each testing stand. If water is plentiful it may be taken from the regular factory supply and discharged into the sewer after passing through the cylinder jackets, but if it is scarce a large cooler may be set up with a blower, for cooling the water and thus using it over and over.

After the connections have been made a little gasoline is injected into each cylinder through the pet cocks, the pet cocks are closed, the spark lever is set for a late spark, the throttle is opened about half way, and the engine is started by means of the crank. Most likely it will start off on one of the first attempts. The tester then immediately advances the spark and cuts down the throttle opening, if necessary, to obtain a speed somewhat below normal. At this speed the engine is allowed to run without load for a couple of hours. During this test, and particularly during the test under half or three-quarters load which follows, the tester carefully watches the bearings with respect to heating, and also watches for knocks or other irregularities in the operation of the motor. If such an irregularity develops it can often be localized by short-circuiting the spark plug first of one cylinder and then of another, thus cutting that cylinder out, and noting the effects. In the final test the brake horse power is determined, the motor being adjusted until it shows the amount of power which has been decided upon by the engineering staff as the standard to be obtained from that type and size of motor.

Testing Stands—Various methods are in use for mounting and driving the motors during the "running in" process. In some factories a portable electric motor is used which is moved from stand to stand and connected to the motor to be "run in" by means of a belt over the motor pulley and the engine flywheel. In other instances, the "running in" stands are arranged in two rows underneath a line shaft and the motors are run by

FIG. 362.—ENGINE TESTING STAND.

belts from the line shaft. Since in a factory of large size there are always more motors under test running under their own power than being "run in," it is possible to drive the line shaft from the motors operating under power. Finally, the test stands may be arranged in sets of two, one containing a motor to be run in and one a motor to be tested under power, and the two motors connected to each other by a quickly ap-

plied coupling. The line shaft method is probably employed the most. Fig. 362 shows a testing stand designed to take engines of different sizes and to permit of quickly securing the engine in position and removing it.

Defects in Valve Timing—If the motor, upon being started under its own power, does not operate satisfactorily, but shows a serious lack of power, it may be due to incorrect timing of the valves. The camshaft gears may have been improperly meshed in assembling, or the valve lifters may not be properly adjusted. It is now customary, at least in the case of the higher grade motors, to mark the points of valve opening and closing on the flywheel and secure a pointer to the rear cylinder extending across to the flywheel rim. As indicated in Fig. 363, the marks on the flywheel show when the crankshaft is in the dead centre position and when each of the different valves should begin to lift and should close. Therefore, if the motor fails to develop the usual amount of power, the tester should observe whether

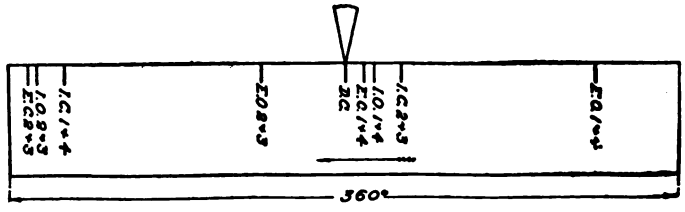

FIG. 363.—VALVE TIMING MARKS ON FLYWHEEL.

each of the valves actually begins to lift when the pointer is opposite the mark on the flywheel which indicates the opening position for that valve, and closes when the pointer is opposite the mark indicating the closing position for the valve. These marks are put on the flywheel after the engine is assembled and the proper points for the marks are in the first place determined as follows: Suppose that we have a 4x5 engine with a 16 inch flywheel and that the exhaust valve is to begin to open 40 degrees ahead of the bottom dead centre. Then the distance along the circumference of the flywheel corresponding to the advance of exhaust opening is

$$\frac{40 \times 16 \times 3.14}{360} = 5.58 \textit{ inches.}$$

The lengths of arc corresponding to the exhaust valve closing lag, the inlet valve opening lag and closing lag can be found in the same way. When scribing the marks upon the fly-

wheel rim, the first thing to do is to determine the two dead centre positions. To this end the plug or cock in the centre of the cylinder head is removed and a rule or rod is inserted through the opening and rested on top of the piston. The crankshaft is then turned until the piston is from 1 to 1½ inches from the top end of its stroke. Then a scratch awl mark is made on the flywheel rim at a point opposite the stationary pointer. Next the crankshaft is turned over the dead centre until the piston is again the same distance from the top of the stroke, and another mark is made on the flywheel rim opposite the stationary pointer. The distance between the two marks on the rim is then halved, and at the point midway between the marks the top dead centre mark is inscribed. In a four cylinder motor this mark corresponds to the top dead centre position of two of the cranks and the bottom dead centre position of the other two, except if the crankshaft is offset. The other dead centre position is directly opposite and can be found in the same way. Of course, the dead centre position can be found directly by turning the crankshaft over and noting the inserted rod rise and fall with the piston, the dead centre position being reached when the rod stops rising. But this method is not as accurate as the one previously described. The positions for other marks are then laid off by means of a tape scale.

Having the marks on the flywheel, the tester can determine whether the valves actually begin to lift and finally close at the intended moments. The push rods should be so adjusted that when the valve is seated there is a slight clearance between their top and the bottom of the valve stem, so that a sheet of thin paper may be inserted between them. When the valve begins to lift the paper will be clamped between the two parts and it is then impossible to withdraw it. If this first occurs when the valve timing pointer is opposite the valve opening mark, the valve is properly timed as to its opening. Should it be found that all of the valves are out in their timing in a certain way—that is, either too early or too late—it is a sign that the camshaft gears were improperly meshed in assembling and the trouble can be corrected by shifting one of the gears around one tooth or several teeth, as the case may require. If only one or two of the valves are improperly timed, the only remedy short of fitting another cam or camshaft, consists in adjusting the push rods.

Location of Knocks—Among the more serious defects which may be found in a new motor is a knock in one of the bearings or elsewhere. When such a defect is present it is readily de-

tected by the ear, but its exact location is a problem that is not so easily settled. Knocking is generally due to looseness in some part, most frequently in the connecting rod bearings and at the joint of the flywheel with the crank shaft. It requires a free play of only a few thousandths of an inch to produce an audible knock, and any slight defect in the workmanship, therefore, may bring on this trouble. The location of the knock is greatly facilitated by means of a stethoscope, as used by physicians in locating irregularities in the action of certain organs of the human body. It consists of a piece of hard rubber connected by rubber tubes to the observer's ears. The instrument is used as shown in Fig. 364, the hard rubber end being passed over the engine, the noise observed increasing as the location of the knock is approached.

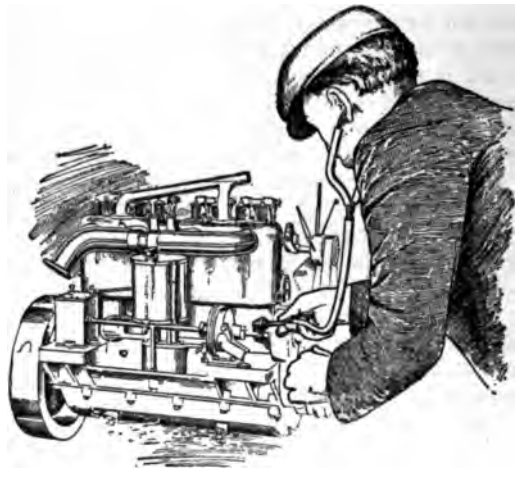

FIG. 364.—LOCATING KNOCKS BY MEANS OF A STETHOSCOPE.

Compression Leaks—Another thing that has to be looked for in making commercial tests of engines is cylinder leaks, which would cause a reduction in the compression. If there is a material difference in the compression of the different cylinders, it may be detected by opening all of the compression cocks but one and turning the engine over by hand, or by allowing the exhaust to discharge directly into the atmosphere, when a difference in the loudness of the exhaust reports will be noticed. In order to determine the location of the leak, a light oil is poured

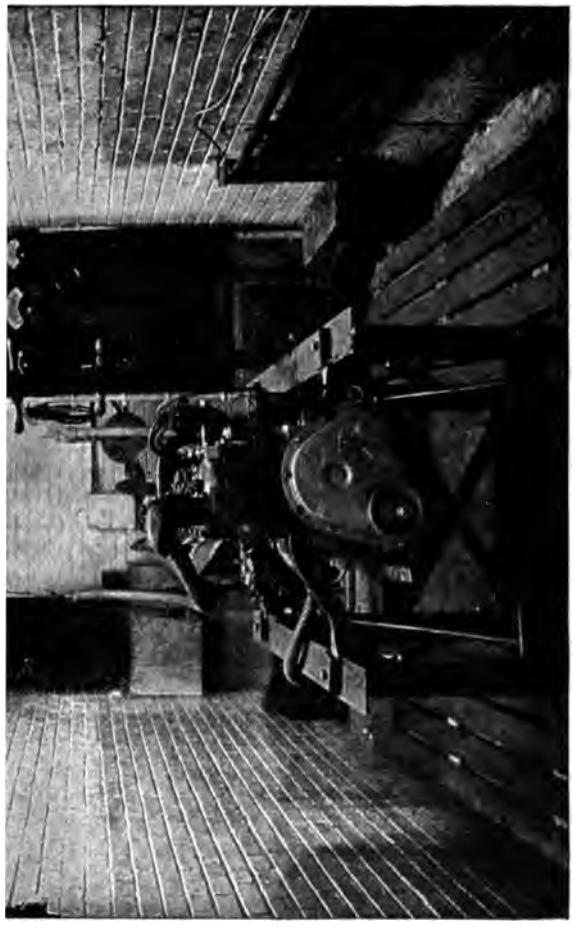

FIG. 365.—SILENCE ROOM FOR DETERMINING UNUSUAL ENGINE NOISES.

over the various joints in the cylinder wall, viz., around the compression cock, the spark plug, the valve caps, etc. If there is a leak at any one of these points it will be shown by the formation of bubbles. Should no leak be found at any of these points, and yet the cylinder show a loss of compression, it must be due to either leaky valves or leaky piston rings. In such a case the valves should be removed and carefully examined, and if the examination prove that they do not seat perfectly all around, they should be reground first with emery dust and oil and then with rotten-stone and water. If the leak still continues after the valves have thus been ground, the trouble must be in the piston rings, and these should be replaced with new ones.

In order to better be able to detect the slightest unnatural noises in a motor after it has been tuned up, some factories have been provided with "silence rooms" in which the motors are run under dynamometer load after they have been run in the regular testing department. In the latter, where a great many motors are constantly under test, there is naturally a good deal of noise, and observations as to the quiet running of a particular motor are rendered difficult. Fig. 365 is a view in one of the silence rooms at the plant of the Chalmers Motor Co. These rooms are built with 24-inch brick walls to exclude all outside noises and are equipped with a dynamometer stand. When the motor is mounted on the stand the one door into the room is closed and a test made to determine whether any part of the motor gives out any untoward noises, which would indicate faulty machine work or assembling.

When the more important defects have thus been eliminated the motor is subjected to the brake test. If at first it fails to develop the power called for further improvements are made in its adjustment until it finally delivers the required output, when it is ready for the stock room.

APPENDIX.

TRACTION RESISTANCE.

n a motor-propelled vehicle travels on a level course
istance to its motion consists of three main items, viz.,
lling resistance at the contact of the wheels with the
, the friction in the rear axle and drive, and the air
ce. In case the vehicle travels on an up grade there is
r factor to be taken into account, namely, the power re-
to lift the weight of the vehicle at a certain rate. When
r is running down hill there is a corresponding negative

road resistance proper, of course, depends very largely
he character of the road surface, but it is also dependent
he diameter of the wheels, the character of the tires and
ed at which the vehicle travels. The second item, the fric-
the rear axle and drive shaft bearings and gears, is com-
ely small, and since it is difficult to separate this from
ad resistance, experimentally, it is generally included
t.

very smooth macadam pavement the traction coefficient may
low as 15 pounds per 1,000, if the vehicle speed is low and
hicle wheels are of large diameter and shod with rubber
It is customary, however, to figure on a traction resistance
pounds per 1,000 for macadamized roads in fair condition
nooth earth roads. Denoting the total weight of the car
passengers by W, the total effort required to overcome
n resistance is evidently

$$\frac{W \times 25}{1,000} \textit{ pounds.}$$

e the speed of the car in miles per hour, then

$$\frac{v \times 5,280}{60} = 88\,v$$

speed in feet per minute, and the horse power required to

overcome traction resistance is

$$H.\ P._t = \frac{W \times 25}{1{,}000} \times 88\, v \times \frac{1}{33{,}000} = \frac{2\, W\, v}{30{,}000}$$

The air resistance is directly proportional to the forwardly projected area A of the car and to the square of the speed. We may therefore write

$$R_a = c\, A\, v^2 \text{ pounds},$$

where c is a constant. The horse power required to overcome this resistance is

$$H.\ P._a = \frac{R_a\, v}{33{,}000} = \frac{c\, A\, v^3}{33{,}000}$$

where R_a is expressed in pounds, A in square feet and v in feet per minute. However, the speed is usually given in miles per hour, and if in the above equation v = speed in miles per hour, then the expression $\frac{c}{33{,}000}$ is approximately equal to $\frac{1}{100{,}000}$, from which we find that

$$H\ P._a = \frac{A\, v}{100{,}000}$$

It is obvious that the total horse power required to propel a car on a level road is the sum of the two above expressions—

$$H.\ P. = \frac{2\, W\, v}{30{,}000} + \frac{A\, v^3}{100{,}000} \quad \ldots\ldots\ldots\ldots\ldots\ldots\ldots\ldots\ldots\ldots (98)$$

Now let it be required to find a suitable gearing ratio for a car weighing with passengers 2,500 pounds and having a forwardly projected area of 12 square feet, to be fitted with a motor having a horse power characteristic like that shown in Fig. 366. By means of equation (98) we can determine the horse power required by this car at different speeds, and plot the result on a co-ordinate diagram.

If now we superpose this curve on the horse power characteristic of the motor so that corresponding car and engine speeds coincide, the point of intersection of the two curves gives the speed at which the car will run on the level. But the gearing ratio has not yet been fixed, and we therefore do not know as yet where to place the car horse power characteristic on the engine horse power diagram.

The gearing ratio would be determined by the consideration that the car shall be able to climb a grade of, say, 6 per cent. on the high gear. The horizontal effort required to pull a car up a 6 per cent. grade is equal to 6 per cent. of its weight. In

this case it is therefore 150 pounds. The traction resistance, at 25 pounds per 1,000, amounts to 62.5 pounds. At the low speed at which the car will be traveling on the grade the air resistance will be negligible, and the total resistance to motion will therefore be

$$150 + 62.5 = 212.5 \textit{ pounds.}$$

Now, suppose that the car has 36 inch wheels. Then there is a resisting force of 212.5 at a radius of 1½ feet, which corre-

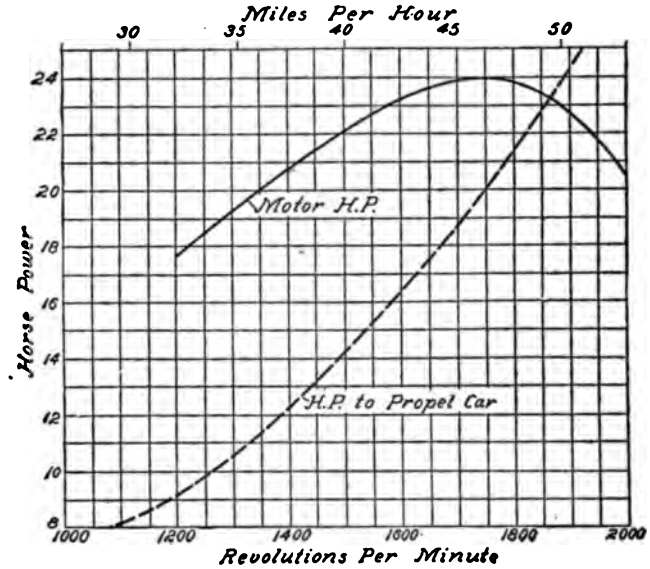

FIG. 366.

sponds to a torque of 318.75 pounds-feet. By reference to the horse power curve, it will be seen that this motor develops a maximum torque of 79 pounds-feet, hence the gear ratio must be

$$\frac{318.75}{79} = 4 \textit{ (approx.)}$$

With the motor turning at 2,000 revolutions per minute, and a reduction ratio from the motor shaft to the driving wheels of 4, the car speed would be

$$\frac{36 \times 3.14}{12} \times \frac{2{,}000}{4} \times \frac{60}{5{,}280} = 53 \textit{ miles per hour.}$$

We therefore superpose the car horse power curve and motor horse power curve, making the speed scales such that 2,000 r. p, m.=53 m. p, h. This is done in Fig. 366, from which it is seen that the maximum speed of the car will be about 49 miles per hour. Any problem in connection with the speed of a car can be solved in the same manner if the horse power characteristic of the motor is known.

The above method of calculation enables us to determine the horse power required for cars of different weights and for different speeds desired. However, it is customary to figure on 1 horse power per 100 pounds of car weight for moderate powered pleasure cars, and 1 horse power to 60 pounds of car weight for high powered roadsters and touring cars. The average A. L. A. M. rating of motors for trucks is given by the formula

$$H.\ P. = 15 + 5 \times T,$$

where T is the load capacity in tons.

Taper Pins.

Standard taper pins for securing machinery parts together have a taper of ¼ inch to the foot. They are regularly made in the following sizes:

Largest Diameter. Inch.	Range of Lengths in Steps of ¼ Inch. Inches.	Inches.
0.156	¾	1¾
0.172	¾	2
0.193	¾	2¼
0.219	¾	3
0.250	¾	3
0.289	¾	3
0.341	¾	4
0.409	1	4
0.492	1¼	4½
0.591	1½	5¼
0.706	1½	6

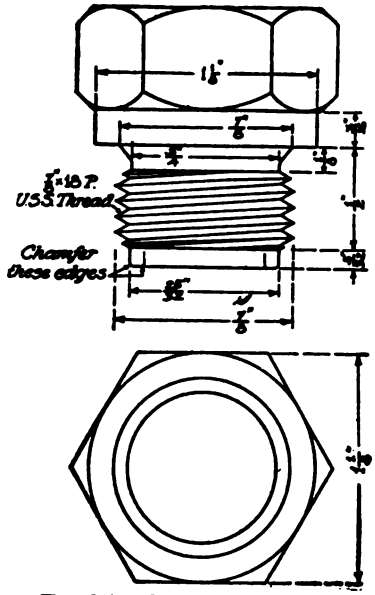

FIG. 367.—S. A. E. SPARK PLUG.

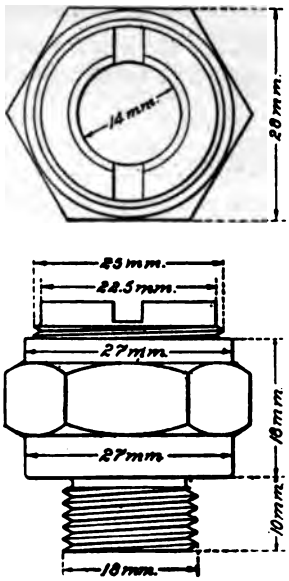

FIG. 368.—DE DION SPARK PLUG.

S. A. E. Standard Spark Plug Shell

Specifications: Stock, hexagon, 1⅛ inch across flats. Flange orm, circular; diameter, 1⅛ inch; thickness, $\frac{1}{16}$ inch; face, nnular seat ⅛ inch wide (suitable for copper-asbestos gasket). lank for thread, ⅞ inch diameter; ½ inch length (including ecess). Recess adjacent to flange, ⅛ inch wide; bottom iameter to equal core diameter of thread; diameter of flange to e not less than ⅞ inch nor more than 57/64 inch (minimum adius to be determined). Thread diameter, ⅞ inch straight tolerance from precise measurement of thread diameter, + 0, -0.003 inch); pitch, 18; form, U. S. standard; cut, perfect into ecess and cuff; both ends to be beveled to an angle of 30 egrees with planes at right angles to the axis of the plug. xtension of spark plug shell below threaded portion shall be nown as cuff. Cuff shall be cylindrical in shape and the outside nd inside edges of the same shall be chamfered; length, 3/32 ıch; diameter, 25/32 inch.

De Dion (European) Standard Spark Plug Shell.

This shell has a straight thread 18 mm. in diameter with pitch of 1.5 mm. The thread portion is 10 mm. long. The ther dimensions are as shown in the accompanying cut. This orm of plug is universally used in France and has been adopted s a standard in Great Britain.

Toothed Gearing.

Following are a few simple rules used in the calculation of the elements of toothed gearing:

SPUR GEARS.

Pitch diameter	$= \frac{\text{Number of teeth.}}{\text{Diametral pitch.}}$
Circular pitch	$= \frac{3.1416}{\text{Diametral pitch.}}$
Addendum (height of tooth above pitch circle)	$= \frac{1}{\text{Diametral pitch.}}$
Dedendum (depth of tooth below pitch circle)	$= \frac{1.157}{\text{Diametral pitch.}}$
Outside diameter of gear blank	$= \frac{\text{Number of teeth} + 2}{\text{Diametral pitch.}}$
Bottom diameter of tooth annulus	$= \frac{\text{Number of teeth} - 2.314}{\text{Diametral pitch.}}$

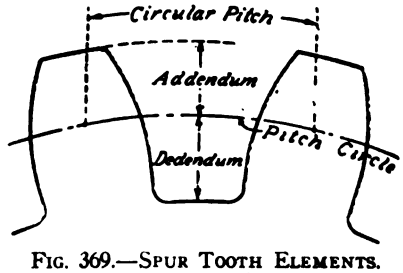

FIG. 369.—SPUR TOOTH ELEMENTS.

In gear cutting practice the following diametrical pitches are used: All the integral numbers from 2 to 12, inclusive, besides 2½, all the even numbers up to and including 24. and all the numbers divisible by 4 up to and including 48.

STUB TEETH.

The common form of spur gearing has involute teeth with a pressure angle of 14½ degrees. In automobile work so-called stub teeth are much used which are of smaller height and have a greater pressure angle. Stub teeth are generally designated by two pitch numbers, as, for instance, 6-8 pitch. This means that for a gear of a given number of teeth the pitch diameter is figured as for a 6 pitch regular tooth, and the addendum and dedendum are figured as for an 8 pitch regular tooth Since

the height of the stub tooth is less, while its thickness is the same as that of the regular tooth, it is considerably stronger than the latter, the proportional increase in strength being especially great in the case of gears with small numbers of teeth. Owing to the increased pressure angle the pressure on the bearings is somewhat greater with the stub tooth, but this disadvantage is slight and is more than balanced by the advantage that there is less sliding at the contacts in the stub tooth. The following rules hold for stub tooth gears cut according to the double pitch system:

$$\text{Pitch diameter} = \frac{\text{Number of teeth.}}{\text{smaller pitch number.}}$$

$$\text{Circular pitch} = \frac{3.1416}{\text{smaller pitch number.}}$$

$$\text{Addendum} = \frac{1}{\text{larger pitch number.}}$$

$$\text{Dedendum} = \frac{1.157}{\text{larger pitch number.}}$$

$$\text{Outside diameter of gear blank} = \text{pitch diameter} + \frac{2}{\text{larger pitch number.}}$$

$$\text{Bottom diameter of tooth annulus} = \text{Pitch diameter} - \frac{2.314}{\text{larger pitch number}}$$

BEVEL GEARS.

Bevel gears, as a rule, are used only for transmitting motion between shafts at right angles, though they may be used for transmission between shafts at any angle in the same plane. All elements of the tooth surfaces converge toward the point of intersection of the axes of the gears. The teeth therefore decrease in size from the outer toward the inner end. The calculation of the pitch diameters, outside diameters and bottom diameters is substantially the same as in the case of spur gears, the calculations being made for the larger end of each gear. The use of the formulæ may be illustrated by an example.

Suppose that a pair of bevel gears are to be designed to work at right angles and to give a ratio of 1 to 2. Then the gear must have twice the number of teeth as the pinion, of the same pitch. Suppose that the amount of power to be transmitted is such that gears with 18 and 36 teeth of 6 pitch with 1 inch face appear to give the proper strength. Then the largest pitch diameters will be 3 and 6 inches respectively. These diameters can be laid off as shown in Fig. 370. The addenda for

both gears are 1-6 inch and the dedenda $\frac{1.157}{6} = 0.193$ inch. These distances are laid off on lines perpendicular to lines drawn from the intersection of the axes of the gears to the ends of the largest pitch diameters.

In turning up the blanks it is necessary to know the face angle. This can be found either by graphical construction or by calculation. The method of calculation (taking the pinion as an example) is as follows:

The tangent of one half the pitch angle is $\frac{1.5}{3} = 0.5$. Therefore, one-half the pitch is 26°34′ and the whole pitch angle 55° 8′. The face angle is larger than the pitch angle by twice the angle subtended at the point of intersection of the axes by the

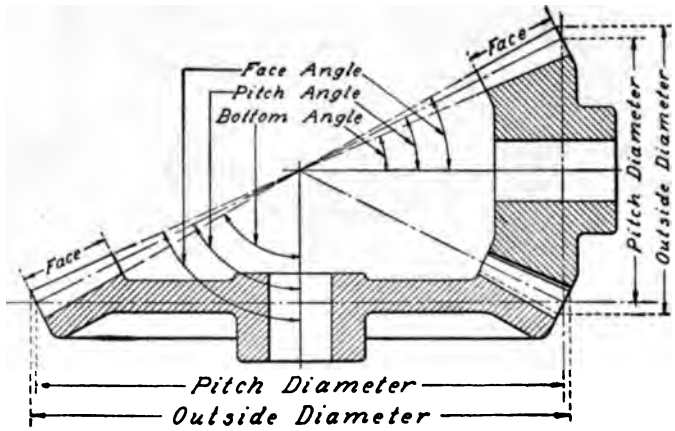

FIG. 370.—BEVEL GEAR LAY-OUT.

tooth addendum. This angle may be found as follows: The distance from the point of intersection to one end of the pitch diameter is

$$\sqrt{3^2 \times 1.5^2} = 3.354$$

Now the addendum divided by this distance gives the tangent of the angle subtended by the addendum at the point of intersection.

$$\frac{0.167}{3.354} = 0.05 \; appr.$$

From a table of tangents we find that an angle of 2 degrees 52 minutes has a tangent of 0.05. Hence the face angle is

$$55^\circ\ 8' \times 2\ (2^\circ\ 52') = 60^\circ\ 52'$$

The bottom angle can be found in a similar manner.

The sides of a bevel gear are turned up at right angles to the pitch line. For turning up the blank, the dimensions required are the face, pitch angle, face angle and outside diameter. The latter may be obtained by means of the equation:

Outside diam. = pitch diam. + 2 × addendum × cos of pitch angle.

HELICAL GEARS.

In gears in which the teeth are not parallel with the axis of rotation a distinction is made between the normal pitch and the apparent pitch. The apparent pitch is found by dividing the number of teeth by the pitch diameter. The normal pitch

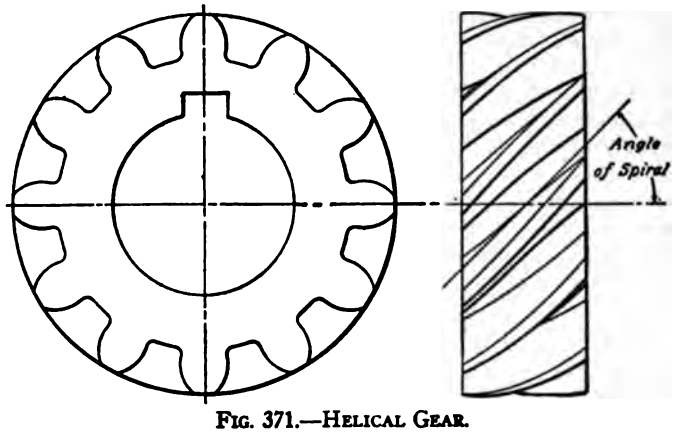

FIG. 371.—HELICAL GEAR.

is obtained by dividing the apparent pitch by the cosine of the angle of spiral. The angle of spiral is the angle made by a tangent to an element of the tooth surface in a helical gear with an intersecting line parallel with the axis of the gear. The spiral advance is the distance in the direction of the axis of the gear in which the elements of the tooth surface describe a complete circle. The following rules apply:

$$\text{Cosine of angle of spiral} = \frac{\text{Number of teeth.}}{\text{Normal pitch} \times \text{pitch diameter.}}$$

$$\text{Spiral advance} = \frac{3.1416 \times \text{pitch diameter}}{\text{tangent of angle of spiral.}}$$

$$\text{Outside diameter} = \text{pitch diameter} + \frac{2}{\text{normal pitch.}}$$

The addendum and dedendum are the same as in a spur gear of the same pitch as the normal pitch of the helical gear.

Helical gears may be cut so as to properly mesh together when mounted on shafts making any desired angle with each other. The most common cases are where the shafts are parallel and where they are at right angles with each other, respectively. When the shafts are parallel the angles of spiral must be the same for both pinion and gear, but one gear must be left handed and the other right handed. When the two shafts are at right angles with each other the sum of the angles of spiral of the two gears must be 90 degrees, and both helices must be either right handed or left handed. The only object in using helical gears when the shafts are parallel is to make the gears more nearly quiet. In such cases, in order to keep down the end thrust, the angle of spiral is made not to exceed 30 degrees. The direction of the end thrust changes with the direction of the helices. When the shafts are at right angles the angles of spiral of both gears are generally not far from 45 degrees. The ratio between the speeds of revolution of two helical gears in mesh with each other is the reciprocal of ratio of their respective numbers of teeth.

METRIC GEAR STANDARDS.

In countries employing the metric system of weights and measures gear calculations are based upon the module, which corresponds to the reciprocal of our diametral pitch. All dimensions are in millimeters and the rules for spur gears are as follows:

$$\text{Module} = \frac{\text{Pitch Diameter}}{\text{Number of teeth.}}$$

Circumferential module = 3.1416 × module

Addendum = Module.

Dedendum = 1.157 × module.

Outside diameter of gear blank = Pitch diameter + (2 × module)

The standard modules progress in steps of ¼ from 1 to 5½. then in steps of ½ to 7, then in steps of 1.

S. A. E. Standard Screws and Nuts.

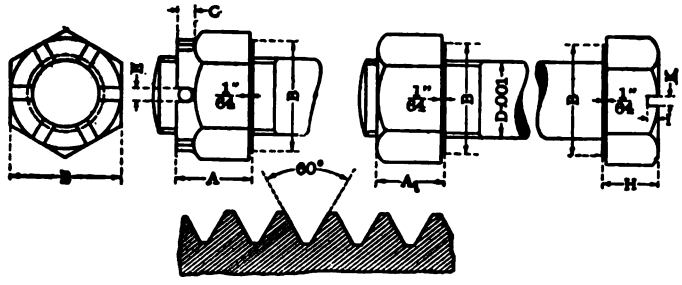

FIG. 372.—S. A. E. SCREW THREAD.

B—Refers to all nuts and screw heads.
D—Diameter of screw.
d—Diameter of cotter pin.
Dx1.5—Length of threaded portion.
P—Pitch of thread.
$\frac{P}{8}$—Flat top.

D	P	A	A_1	B	C	E	H	I	K	d
1/4	28	5/32	7/32	7/16	5/32	5/64	5/16	5/32	1/16	1/16
5/16	24	21/64	17/64	1/2	5/32	5/64	15/64	7/64	1/16	1/16
3/8	24	13/32	21/64	9/16	1/8	1/8	5/32	1/8	5/32	5/32
7/16	20	27/64	3/8	5/8	1/8	1/8	21/64	1/8	5/32	5/32
1/2	20	9/16	7/16	3/4	9/16	1/8	3/8	1/8	5/32	5/32
9/16	18	39/64	21/64	7/8	9/16	5/32	27/64	1/8	5/32	1/8
5/8	18	43/64	35/64	15/16	1/4	5/32	15/32	1/8	5/32	1/8
11/16	16	49/64	19/32	1	1/4	5/32	33/64	1/8	5/32	1/8
3/4	16	15/16	21/32	1 1/16	1/4	5/32	9/16	1/8	5/32	1/8
7/8	14	29/32	49/64	1 1/4	1/4	5/32	21/32	1/8	5/32	1/8
1	14	1	7/8	1 7/16	1/4	5/32	3/4	1/8	5/32	1/8
1 1/8	12	1 5/32	63/64	1 5/8	5/16	7/32	27/32	7/32	5/32	11/64
1 1/4	12	1 1/4	1 5/32	1 13/16	5/16	7/32	15/16	7/32	5/32	11/64
1 3/8	12	1 13/32	1 13/64	2	3/8	1/4	1 1/32	1/4	5/16	13/64
1 1/2	12	1 1/2	1 5/16	2 3/16	3/8	1/4	1 1/8	1/4	5/16	15/64

Dimensions—All dimensions in inches.

Finish—All heads and nuts to be semi-finish.

Material—For all screws and nuts—steel.

Screws are to be left soft. Screw heads are to be left soft. The plain nuts are to be left soft. The castle nuts are to be case hardened.

It is assumed that where screws are to be used in soft material, such as cast iron, brass, bronze or aluminum, the United States standard pitches will be used.

Tolerance—The body diameter of the screws shall be one-thousandth (0.001) inch less than the nominal diameter, with a plus tolerance of zero and a minus tolerance of two-thousandths (0.002) inch.

The nuts shall be a good fit without perceptible shake.

Clearance between tops of threads and bottoms of threads—The tap shall be between two-thousandths (.002) inch and three-thousandths (.003) inch large.

DRILL SIZES, CROSS SECTIONAL AREAS AND TENSILE STRENGTHS OF S. A. E. STANDARD SCREWS.

		Areas.		Tensile Strengths.		
Nominal Diameter.	Drill Size.	Full Bolt.	Bottom of Thread.	At 20,000 Lbs. Per Sq. Inch.	At 25,000 Lbs. Per Sq. Inch.	At 30,000 Lbs. Per Sq. Inch.
1/4	7/32	0.0491	0.0325	651	814	977
5/16	17/64	0.0767	0.0525	1,050	1,312	1,575
3/8	21/64	0.1104	0.0808	1,617	2,021	2,426
7/16	3/8	0.1503	0.1132	2,264	2,830	3,396
1/2	7/16	0.1963	0.1486	2,972	3,726	4,459
9/16	1/2	0.2485	0.1888	3,777	4,722	5,666
5/8	9/16	0.3068	0.2400	4,800	6,000	7,200
11/16	39/64	0.3712	0.2888	5,776	7,220	8,664
3/4	43/64	0.4418	0.3514	7,028	8,785	10,452
7/8	25/32	0.6013	0.4816	9,633	12,141	14,449
1	29/32	0.7854	0.6463	12,926	16,158	19,389
1 1/8	1 1/64	0.994	0.799	15,980	19,975	23,970
1 1/4	1 9/64	1.2272	1.009	20,180	25,225	30,270
1 3/8	1 17/64	1.4849	1.243	24,860	31,075	37,290
1 1/2	1 25/64	1.7671	1.503	30,060	37,575	45,090

Standard Metric Threads.

The following table gives the pitches of screws of different diameters cut with standard metric threads:

Screw Diam. Mm.	Pitch. Mm.	Screw Diam. Mm.	Pitch. Mm.
6	1	16	2
7	1	18	2.5
8	1.25	20	2.5
9	1.25	22	2.5
10	1.5	24	3
11	1.5	27	3
12	1.75	30	3.5
14	2	33	3.5

Drill Sizes, Cross Sectional Areas and Tensile Strengths of U. S. Standard Screws.

Nominal Diameter.	Pitch.	Drill Size.	Areas. Full Bolt.	Areas. Bottom of Thread.	Tensile Strengths. At 15,000 Lbs. Per Sq. In.	Tensile Strengths. At 20,000 Lbs. Per Sq. In.
¼	20	3/16	0.0491	0.0269	403	538
5/16	18	1/4	0.0767	0.0454	681	908
⅜	16	5/16	0.1104	0.0678	1,017	1,356
7/16	14	23/64	0.1503	0.0934	1,401	1,868
½	12	13/32	0.1963	0.1155	1,732	2,310
⅝	11	17/32	0.3068	0.2018	3,027	4,036
¾	10	41/64	0.4418	0.302	4,530	6,040
⅞	9	3/4	0.6013	0.4193	6,290	8,386
1	8	55/64	0.7854	0.5511	8,266	11,022

S. A. E. Standard Magneto Dimensions for Four and Six Cylinder Engines.

	Mm.	Inches
Shaft height	45.	1.771
Distance from center of front base-plate holes to large end of shaft taper	53.	2.086
Distance from center of front base-plate holes to center of rear base-plate holes	50.	1.968
Distance between centers of base-plate holes left to right	50.	1.968
Large diameter of taper	15.	0.590
Small diameter of taper	12.	0.472
Length of taper	15.	0.590
Taper 1:5 (included angle) 11 deg. 30 min. approx. Woodruff key No. 3.		
Height of magneto space	203.	8.000
Length of magneto space	254.	10.000
Width of magneto space	127.	5.000
Plain hole timing lever	6.35	0.25
Tapped hole timing lever, ¼ inch, 28 P., S. A. E.		
Base-plate holes—⅜ in. 16 P., U. S. S.		
Thread for end of magneto shaft ⅜ in., 16 P., U. S. S., length of thread 0.5905 in.		
Advance lever radius	2.125 in.	

Silent Chains.

Let P = pitch of chain and
N = number of teeth in sprocket,

Then

$$\textit{Pitch diameter} = \frac{P}{\sin \frac{180^\circ}{N}} \textit{ inches.}$$

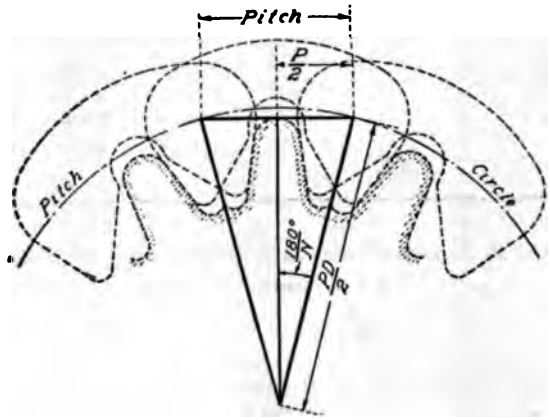

FIG. 373.—PITCH DIAMETER DIAGRAM.

Let Z = number of links in chain;
D = pitch diameter of sprocket wheel;
d = pitch diameter of sprocket pinion;
N = number of teeth in wheel;
n = number of teeth in pinion;
L = distance between axes of wheel and pinion;

Then

$$Z = \frac{N+n}{2} + (N-n)\frac{\beta}{180} + \frac{2\,D\cos\beta}{P},$$

where

$$\sin\beta = \frac{D-d}{2\,L}$$

The above formula can be used for determining the approximate number of links required for a certain centre distance and sprockets with certain numbers of teeth. But since the result is almost sure to involve a fraction it cannot be used directly.

POSSIBLE CENTRE DISTANCES FOR "ONE TO TWO" PAIRS OF SILENT CHAIN SPROCKETS.

(Chains running tight on sprockets.)

No. of Teeth in Pinion.	No. of Teeth of Gear.	No. of Links.	Pitch. 0.315	0.4	0.5	0.625
			Centre Distances.			
13	26	33	2.020	2.565	3.206	4.008
13	26	34	2.186	2.776	3.470	4.337
14	28	36	2.252	2.859	3.574	4.468
15	30	38	2.318	2.934	3.680	4.600
13	26	35	2.350	2.984	3.730	4.663
14	28	37	2.417	3.069	3.836	4.796
15	30	39	2.483	3.154	3.942	4.928
13	26	36	2.514	3.192	3.990	4.987
16	32	41	2.550	3.238	4.048	5.060
14	28	39	2.745	3.279	4.098	5.122
17	34	43	2.616	3.322	4.152	5.190
15	30	40	2.649	3.363	4.204	5.255
13	26	37	2.677	3.399	4.248	5.310
16	32	42	2.715	3.448	4.310	5.388
14	28	39	2.745	3.486	4.357	5.447
17	34	44	2.782	3.533	4.416	5.520
15	30	41	2.812	3.571	4.464	5.580
13	26	38	2.838	3.604	4.505	5.632
18	36	46	2.848	3.616	4.520	5.650
16	32	43	2.880	3.658	4.572	5.715
14	28	40	2.907	3.692	4.615	5.769
19	38	48	2.914	3.700	4.625	5.782
17	34	45	2.947	3.742	4.678	5.848
15	30	42	2.925	3.778	4.723	5.904
13	26	39	3.000	3.810	4.762	5.953
18	36	47	3.013	3.828	4.782	5.979
16	32	44	3.044	3.866	4.832	6.040
14	28	41	3.069	3.898	4.872	6.090
19	38	49	3.080	3.901	4.889	6.112
17	34	46	3.110	3.950	4.937	6.172
15	30	43	3.037	3.984	4.980	6.226
20	40	51	3.146	3.994	4.993	6.242
13	26	40	3.161	4.014	5.018	6.273
18	36	48	3.178	4.035	5.044	6.305
16	32	45	3.207	4.072	5.090	6.363
14	28	42	3.231	4.103	5.129	6.411
19	38	50	3.246	4.122	5.152	6.440
17	34	47	3.274	4.158	5.197	6.497
15	30	44	3.299	4.220	5.237	6.547
20	40	52	3.312	4.201	5.257	6.571
13	26	41	3.322	4.218	5.273	6.592
18	36	49	3.342	4.243	5.304	6.630
16	32	46	3.369	4.278	5.348	6.685
14	28	43	3.392	4.307	5.384	6.731
19	38	51	3.410	4.330	5.413	6.766
17	34	48	3.438	4.366	5.457	6.821
16	30	45	3.461	4.395	5.494	6.867
20	40	53	3.477	4.415	5.519	6.899
13	26	42	3.483	4.422	5.528	6.910
18	36	50	3.505	4.451	5.564	6.955
16	32	47	3.531	4.484	5.605	7.006

The correct centre distance for the nearest full number of links may then be found by means of the following equation:

$$L = \frac{P\left[Z - \frac{N}{2} - \frac{n}{2} - (N - n)\frac{\beta}{180}\right]}{2 \cos \beta}$$

The accompanying table gives all the possible centre distances for "one to two" sets of silent chain sprockets over a certain range of sprocket sizes and link numbers for the four smallest pitches in practical use. This range is believed to include all possible cases of automobile camshaft drives.

The outside diameter of the sprocket is different for the different makes of chains. In some makes it is slightly greater than the pitch diameter and in others slightly less. This dimension, therefore, can only be determined after the make of chain to be used has been settled upon.

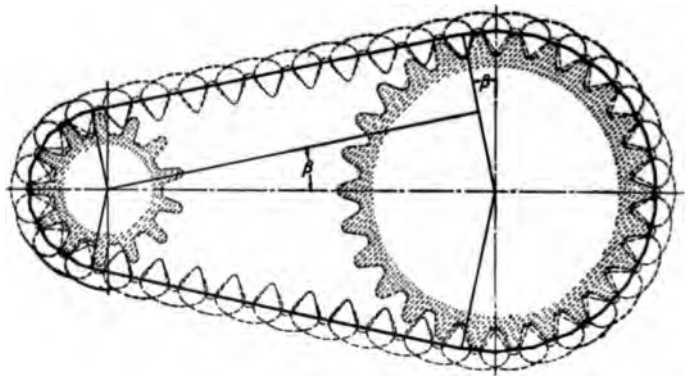

FIG. 374.—CENTRE DISTANCE DIAGRAM.

Dimensions of Cylinder Ring Blanks (Eccentric Rings).

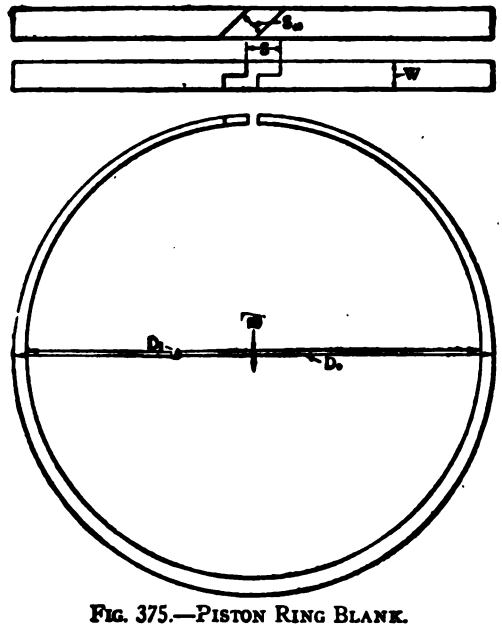

FIG. 375.—PISTON RING BLANK.

Bore.	Outside Diameter. (Do)	Inside Diameter. (Di)	Eccentricity. (E)	Width of Squares Slot. (S)	Width of 45° Diagonal Slot. (S_{45})	Width. (W)
3	3.105	2.919	.022	0.270	0.190	.150
3⅛	3.234	3.041	.028	0.281	0.197	.156
3¼	3.364	3.162	.029	0.292	0.204	.163
3⅜	3.493	3.284	.031	0.304	0.213	.169
3½	3.622	3.405	.032	0.315	0.220	.175
3⅝	3.752	3.527	.033	0.326	0.228	.181
3¾	3.881	3.649	.034	0.337	0.236	.187
3⅞	4.011	3.770	.035	0.349	0.244	.194
4	4.14	3.892	.036	0.360	0.252	.200
4⅛	4.269	4.014	.037	0.371	0.260	.206
4¼	4.399	4.135	.039	0.382	0.267	.212
4⅜	4.528	4.257	.040	0.394	0.276	.219
4½	4.657	4.378	.041	0.405	0.283	.225
4⅝	4.787	4.500	.042	0.416	0.291	.231
4¾	4.916	4.622	.043	0.427	0.299	.237
4⅞	5.046	4.743	.044	0.439	0.307	.244
5	5.175	4.865	.045	0.450	0.315	.250
5⅛	5.304	4.987	.047	0.461	0.322	.256
5¼	5.434	5.108	.048	0.472	0.330	.262
5⅜	5.563	5.230	.049	0.484	0.339	.269
5½	5.693	5.351	.050	0.495	0.346	.275

Valve Spring Table.

In the following table *D* denotes the mean diameter of the coil (from centre to centre of wire), which is equal to the outside diameter minus the diameter of the wire; *d*, the diameter of the wire *W*, the maximum safe pressure a spring of the particular diameter will sustain, and *F* the deflection of one coil under a pressure of 100 pounds. It will be noticed that three different values are given for *F* for each size of wire and diameter of coil; these correspond to coefficients of torsional elasticity of 10,000,000, 12,000,000 and 14,000,000, respectively. The maximum safe pressure is calculated on the basis of a stress of 50,000 pounds per square inch. The table covers every size of wire in the Birmingham gauge from No. 11 to No. 6, inclusive.

An example will show the use of the table. Let us suppose that we have a spring wound from No. 8 wire, with a mean diameter of coil of 1 inch. It will be seen that the maximum safe pressure of such a spring is 88.2 pounds. Assuming the coefficient of torsional elasticity to be 12,000,000, the deflection of each coil under a load of 100 pounds will be 0.0899 inch. Therefore, if there are ten coils in the spring and the maximum load is 80 pounds, the total compression of the spring from the free state will be

$$\frac{10 \times 80 \times 0.0899}{100} = 0.719 \textit{ inch}$$

d = 0.120 No. 11.	D	¾	⅞	1	1⅛	1¼			
	W	45.2	38.8	33.9	30.2	27.1			
	F	.1628	.2585	.3858	.5312	.7538			
		.1357	.215	.3215	.4427	.6282			
		.1162	.1846	.2756	.3795	.5385			
d = 0.134 No. 10.	D	¾	⅞	1	1⅛	1¼	1⅜		
	W	63	54	47.2	42	37.8	34.4		
	F	.1047	.1662	.2481	.3417	.4847	.6436		
		.0872	.1385	.2068	.2847	.4039	.5363		
		.0748	.1187	.1773	.2498	.3462	.4598		
d = 0.148 No. 9.	D	¾	⅞	1	1⅛	1¼	1⅜	1½	
	W	84.9	72.7	63.6	56.6	50.9	46.3	42.4	
	F	.0703	.1117	.1667	.2296	.3257	.4335	.5628	
		.0586	.0931	.1389	.1913	.2714	.3612	.4690	
		.0502	.0798	.1191	.1640	.2326	.3096	.4020	
d = 0.165 No. 8.	D	¾	⅞	1	1⅛	1¼	1⅜	1½	1⅝
	W	117.6	100.8	88.2	78.4	70.6	64.1	58.8	54.3
	F	.0396	.0723	.1080	.1486	.2108	.2806	.3643	.4632
		.0379	.0603	.0899	.1238	.1757	.2338	.3036	.3860
		.0283	.0517	.0771	.1062	.1506	.2004	.2602	.3309

d = .180 No. 7	D	1	1⅛	1¼	1⅜	1½	1⅝	1¾	1⅞
	W	128.4	118.6	109.5	101.1	93.9	87.6	82.1	77.3
	F	.0762	.1049	.1488	.1981	.2572	.3270	.4085	.5024
		.0635	.0874	.1240	.1651	.2143	.2725	.3404	.4186
		.0544	.0610	.1063	.1415	.1837	.2336	.2918	.3589
d = .203 No. 6	D	1⅛	1¼	1½	1⅝	1¾	1⅞	2	2⅛
	W	128.4	118.6	109.5	101.1	93.9	87.6	82.1	77.3
	F	.0920	.1225	.1590	.2021	.2525	.3105	.3769	.4520
		.0766	.1020	.1325	.1684	.2104	.2588	.3141	.3767
		.0657	.0875	.1136	.1444	.1803	.2218	.2692	.3229

Woodruff Keys.

Woodruff keys are used very extensively in automobile construction, in the motor as well as in other parts of the chassis. The following rules may be used in selecting the proper size of keys of this type:

Let D = depth in shaft;

A = diameter of shaft;

T = thickness of key;

then, for most ordinary purposes,

$$D = \frac{A}{3}$$

$$T = \frac{A}{4}$$

Where the key has to perform exceptionally severe service, as in the case of a flywheel, a propeller shaft gear, etc., it is advisable to calculate it by means of the following equation:

$$L_e \times T = \frac{F}{S_s}$$

where

L_e = effective length of key;

F = maximum force at radius of key;

S_s = allowable shearing stress.

In some cases where the small thickness of the hub shell does not admit of the use of a single key of adequate size two smaller keys may be used arranged end to end. However, if the hub is not long enough for this, the two keys may be placed at 90 degrees with each other. The former arrangement is the least expensive, but the latter fits by far the greater number of cases. The depth of the key in the hub, etc., is made one-half the thickness of the key, as with common square keys. The following table of Woodruff key dimensions is taken from an article on the subject by George E. Goddard in THE HORSELESS AGE, of December 2, 1908:

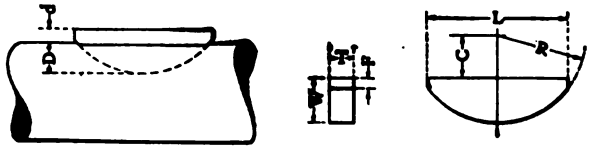

FIG. 376.—WOODRUFF KEY.

DIMENSIONS OF WOODRUFF KEYS.

No. of Key	Thickness T.	Approximate Length L.	Depth in Shaft D.	Depth in Piece d.	Whole Width of Key W.	Radius of Key R.	Complement of Radius C.	Width of Fla F.
1	1/16	1/2	.175	.030	13/64	1/4	3/64	..
2	3/32	1/2	.195	.050	13/64	1/4	3/64	..
3	1/8	1/2	.145	.060	13/64	1/4	3/64	..
4	3/32	5/8	.210	.050	1/4	3/16	1/16	..
5	1/8	5/8	.190	.060	1/4	3/16	1/16	..
6	3/32	5/8	.175	.080	1/4	3/16	1/16	..
7	1/8	3/4	.255	.060	3/16	3/8	1/16	..
8	3/32	3/4	.235	.080	3/16	3/8	1/16	..
9	3/16	3/4	.220	.095	3/16	3/8	1/16	..
10	3/32	7/8	.300	.080	3/8	7/16	1/16	..
11	3/16	7/8	.285	.095	3/8	7/16	1/16	..
12	7/32	7/8	.270	.110	3/8	7/16	1/16	..
A	1/4	7/8	.255	.125	3/8	7/16	1/16	..
13	3/16	1	.345	.095	7/16	1/2	1/16	..
14	7/32	1	.360	.080	7/16	1/2	1/16	..
15	1/4	1	.315	.125	7/16	1/2	1/16	..
B	5/16	1	.285	.155	7/16	1/2	1/16	..
16	5/16	1 1/8	.390	.095	11/64	5/16	1/64	..
17	7/32	1 1/8	.315	.110	11/64	5/16	1/64	..
18	1/4	1 1/8	.365	.125	11/64	5/16	1/64	..
C	5/16	1 1/8	.335	.155	11/64	5/16	1/64	..
19	5/16	1 1/4	.460	.095	15/64	5/8	1/64	..
20	7/32	1 1/4	.440	.110	15/64	5/8	1/64	..
21	1/4	1 1/4	.425	.125	15/64	5/8	1/64	..
D	5/16	1 1/4	.395	.160	15/64	5/8	1/64	..
E	3/8	1 1/4	.365	.185	15/64	5/8	1/64	..
22	1/4	1 3/8	.475	.125	13/32	11/16	3/32	..
23	5/16	1 3/8	.440	.155	13/32	11/16	3/32	..
F	3/8	1 3/8	.410	.185	13/32	11/16	3/32	..
24	1/4	1 1/2	.520	.125	21/64	3/4	3/64	..

DIMENSIONS OF WOODRUFF KEYS—CONTINUED.

No. of Key	Thickness T.	Approximate Length L.	Depth in Shaft D.	Depth in Piece d.	Whole Width of Key W.	Radius of Key R.	Complement of Radius C.	Width of Flat F.
25	3/16	1½	.490	.155	11/16	¾	7/16	..
G	⅜	1½	.460	.185	11/16	¾	7/16	..
26	3/16	1 13/16	.440	.095	13/32	11/16	13/32	3/32
27	¼	1 13/16	.410	.125	13/32	11/16	13/32	3/32
28	3/16	1 13/16	.380	.155	13/32	11/16	13/32	3/32
29	⅜	1 13/16	.350	.185	13/32	11/16	13/32	3/32
R	¼	2 3/16	.630	.125	¾	1⅜	⅝	⅜
S	3/16	2 3/16	.600	.155	¾	1⅜	⅝	⅜
T	⅜	2 3/16	.565	.185	¾	1⅜	⅝	⅜
U	7/16	2 3/16	.535	.220	¾	1⅜	⅝	⅜
V	½	2 3/16	.505	.250	¾	1⅜	⅝	⅜
30	⅜	2⅞	.755	.185	15/16	1¾	15/16	3/16
31	7/16	2⅞	.720	.220	15/16	1¾	15/16	3/16
32	½	2⅞	.690	.250	15/16	1¾	15/16	3/16
33	9/16	2⅞	.660	.280	15/16	1¾	15/16	3/16
34	⅝	2⅞	.630	.315	15/16	1¾	15/16	3/16
35	11/16	2⅞	.600	.345	15/16	1¾	15/16	3/16
36	¾	2⅞	.565	.375	15/16	1¾	15/16	3/16

Automobile Engine Light Lubricating Oil.

S. A. E. SPECIFICATION.

Oil for this purpose must be a pure mineral oil, no addition or adulterant of any kind being permitted.

The following characteristics are desired:

Specific gravity.....28° to 32° Beaumé
Flash point, not less than.....400° F.
Fire test, not less than.....450° F.
Viscosity at 100° F., Saybolt viscosimeter, not over .....300 seconds
Viscosity at 210° F., Saybolt viscosimeter....40 to 50 seconds
Viscosity at 210° F., Tagliabue viscosimeter..60 to 65 seconds
Carbon residue, not over.....0.50 per cent.

S. A. E. Bearing Metal Specifications.

Babbitt Metal.

Tin	84.00%
Antimony	9.00%
Copper	7.00%

A variation of 1 per cent. either way will be permissible in the tin, and .5 per cent. either way will be permissible in the antimony and copper. The use of other than virgin metals is prohibited. No impurity will be permitted other than lead, and that not in excess of 0.25 per cent.

NOTE: This grade of babbitt contains an unusually large amount of copper, and is used for the connecting rod linings of motor bearings and other bearings subjected to severe service.

White Brass.

Copper	3.00 to 6.00%
Tin, not less than	65.00%
Zinc	28.00 to 30.00%

Metal with more than 0.25 per cent. impurities may be rejected.

NOTE: This alloy gives good results in automobile engines, but provision should be made to have it generously lubricated.

Phosphor Bronze.

Copper	80.00%
Tin	10.00%
Lead	10.00%
Phosphorus	0.05 to 0.25%

Impurities in excess of 0.25 per cent. will not be permitted.

NOTE: This is a metal similar to that specified by many railroads for various purposes. It is an excellent composition where good anti-friction qualities are desired, standing up exceedingly well under heavy loads and severe usage. In automobile construction it should be used only against hardened steel

S. A. E. Standards for Non-Ferrous Metal Tubing.

Tubing can be furnished in copper, and the commercial alloys of copper and zinc, such as high brass, bronze, phosphor bronze and tobin bronze.

Composition.—As specified to meet the requirements of use.

Temper.—As specified in the order; may be hard, half hard or annealed. If annealed, the tubing may be soft or light annealed.

Size Variation.—On inside and outside diameter and the thickness of the walls, as follows:

Outside and Inside Dimensions.

Up to ½ in. inclusive	0.002 in.	over or under
Over ½ in. to and including ¾ in.	0.0025 in.	over or under
Over ¾ in. to and including 1 in.	0.003 in.	over or under
Over 1 in. to and including 1¼ in.	0.0035 in.	over or under
Over 1¼ in. to and including 1½ in.	0.004 in.	over or under
Over 1½ in. to and including 1¾ in.	0.0045 in.	over or under
Over 1¾ in. to and including 2 in.	0.005 in.	over or under
Over 2 in.	¼ of 1 per cent.	over or under

No combination of variations on the same tube shall make the thickness of the wall vary from the nominal by more than the following amounts:

Thickness of Wall.

Up to and including 1/64 in.	0.001 in.	over or under
Over 1/64 in. to and including 1/32 in.	0.002 in.	over or under
Over 1/32 in. to and including 1/16 in.	0.003 in.	over or under
Over 1/16 in. to and including ⅛ in.	0.005 in.	over or under
Over ⅛ in. to and including ¼ in.	0.008 in.	over or under
Over ¼ in. to and including 5/16 in.	0.0125 in.	over or under
Over 5/16 in. to and including ⅜ in.	0.015 in.	over or under

Special Limits.—On all stock where the above commercial variations are not permissible limits shall be specified in the order.

Metric-American Units Conversion Tables.

American to Metric.

Inches × 2.54 = centimeters.
Feet × 0.3048 = meters.
Yards × 0.9144 = meters.
Miles × 1.609 = kilometers.
Square inches × 6.452 = square centimeters.
Square feet × 0.0929 = square meters.
Cubic inches × 16.387 = cubic centimeters.
Cubic feet × 0.0283 = cubic meters.
Pounds × 0.4536 = kilograms.
U. S. gallons × 3.7854 = litres.
British thermal units × 0.252 = calories.
Horse powers × 1.0138 = chevoux (metric horse powers).
Foot-pounds (work) × 0.1383 = kilogrammeters.
Pounds feet (torque) × 0.1383 = meter-kilograms.
Feet per minute × 0.00508 = meters per second.
Miles per hour × 1.609 = kilometers per hour.
Pounds per square inch × 0.0703 = kilograms per square centimeter.
Pounds per gallon × 0.1198 = kilograms per litre.
British thermal units per pound × 0.5556 = calories per kilogram.
British thermal units per gallon × 0.06658 = calories per litre.
Pounds per horse power hour × 447.4 = grams per cheval-heure.
Miles per gallon × 0.425 = kilometers per liter.
Horse power × 746 = watts.
U. S. gallons × 0.833 = Imperial gallons.
(Fahrenheit temp. — 32) × 0.555 = centigrade temp.

Metric to American.

Millimeters × 0.03937 = inches.
Meters × 39.37 = inches.
Meters × 3.281 = feet.
Meters × 1.094 = yards.
Kilometers × 0.6214 = miles.
Square centimeters × 0.155 = square inches.
Square meters × 10.764 = square feet.
Cubic centimeters × 0.06102 = cubic inches.
Cubic meters × 35.314 = cubic feet.
Kilograms × 2.2046 = pounds.

METRIC-AMERICAN UNITS CONVERSION TABLES—(*Continued*).

Litres × 0.2642 = U. S. gallons.
Calories × 3.968 = British thermal units.
Chevaux × 0.9863 = horse power.
Kilogrammeters × 7,233 = foot-pounds.
Meters per second × 196.86 = feet per minute.
Kilometers per hour × 0.6214 = miles per hour.
Kilograms per square centimeter × 14.223 = pounds per square inch.
Kilograms per litre × 8.347 = pounds per gallon.
Calories per kilogram × 1.8 = British thermal units per pound.
Calories per litre × 15.02 = British thermal units per U. S. gallon.
Kilometers per litre × 2.353 = miles per gallon.
Imperial gallons × 1.2 = U. S. gallons.
Kilowatts × 1.3405 = horse powers.
(Centigrade temp. × 1.8) + 32 = Fahrenheit temp.

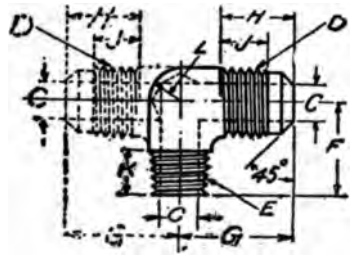

FIG. 377.—S. A. E. FLARED TUBE ELL AND T.

S. A. E. FLARED TUBE ELLS AND TEES

Tube Diam.	1/4	5/16	3/8	7/16	1/2	5/8	3/4
C	5/16	5/16	5/16	5/16	11/16	1/2	5/8
D	7/16x20 thr.	1/2x20 thr.	5/8x18 thr.	11/16x16 thr.	3/4x16 thr.	7/8x14 thr.	1x14 thr.
E	1/8 pipe thr.	1/8 pipe thr.	1/4 pipe thr.	1/4 pipe thr.	3/8 pipe thr.	1/2 pipe thr.	3/4 pipe thr.
F	3/4	3/4	7/8	11/16	1	1 1/4	1 3/8
G	7/8	11/16	1	1 1/8	1 5/16	1 7/16	1 5/8
H	1/2	5/16	3/8	11/16	3/4	7/8	1
J	11/16	3/8	11/16	7/16	1/2	11/16	11/16
K	3/8	3/8	7/16	7/16	1/2	5/16	3/8
L	1/8	1/4	5/16	5/16	11/16	11/16	11/16

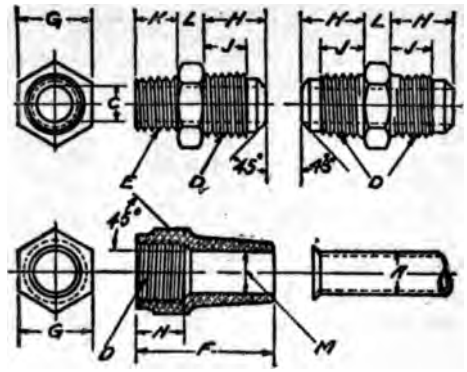

FIG. 378.—S. A. E. FLARED TUBE UNION.

S. A. E. FLARED TUBE UNIONS

A	1/4	5/16	5/16	7/16	1/2	5/8	3/4
C	5/16	7/16	5/16	5/16	11/16	1/2	5/8
D	7/16x20 thr.	1/2x20 thr.	9/16x18 thr.	11/16x16 thr.	3/4x16 thr.	7/8x14 thr.	1x14 thr.
E	1/8 pipe thr.	1/8 pipe thr.	1/4 pipe thr.	1/4 pipe thr.	3/8 pipe thr.	1/2 pipe thr.	3/4 pipe thr.
F	11/16	1 1/8	1 5/16	1 1/2	1 5/8	1 7/8	2 5/16
G	5/16	5/8	3/4	11/16	7/8	1 5/16	1 5/16
H	1/2	9/16	5/8	11/16	3/4	7/8	1
J	11/16	3/8	11/16	7/16	1/2	11/16	11/16
K	3/8	3/8	7/16	7/16	1/2	9/16	5/8
L	5/16	7/16	1/4	5/16	5/16	3/8	7/16
M	0.255–0.260	0.317–0.322	0.380–0.385	0,442–0.447	0.505–0.510	0.630–0.635	0.755–0.760
N	11/16	3/8	7/16	1/2	9/16	11/16	11/16

BRITISH TRUCK MOTOR PRACTICE.

Following is a summary of truck motor practice in Great Britain, the figures given having been calculated from data of 19 motors, published in a paper on "Engines for Petrol Commercial Vehicles," by W. D. Williamson, presented to the Institution of Automobile Engineers, London, in February, 1916. All engines have four cylinders:

	Min.	*Max.*	*Average*
Stroke bore ratio	1.11	1.47	1.27
Compression ratio	4.03	5	4.45
Connecting rod length/stroke	1.82	2.73	2.17
Piston pin diameter/bore	0.192	0.29	0.23
Piston pin bearing length/bore	0.445	0.555	0.494
Crankpin bearing length/diameter	1.133	2	1.405
Crankpin bearing length/bore	0.386	0.550	0.457
Main journal diameter/bore	0.39	0.55	0.46
Front bearing length/diameter	1.235	2.445	1.71
Intermediate bearing length/diameter	1.147	2.25	1.68
Rear bearing length/diameter	1.47	2.67	2
Valve bore/cylinder bore	0.4	0.512	0.456
Valve head diameter/valve bore	1.052	1.185	1.11
Inlet valve bore/lift	4.0	7.2	5.4
Exhaust valve bore/lift	4.0	7.2	5.15
Valve bore/stem diameter	4	6.36	5
Width of cam gears/bore	0.21	0.35	0.275
Width of silent chain/bore	0.232	0.452	0.327
Flywheel diameter/stroke	3.00	4.40	3.67
Flywheel weight constant *	14	29	21.5
Governed or normal piston speed	823	1135	950

* In the equation

$$W = c\left(\frac{b\ l}{r}\right)^2$$

in which W = total weight of flywheel; b = cylinder bore; l = length of stroke, and r = outside radius of rim.

Cylinder grouping—singly, 10.5%; in pairs, 79%; en bloc, 10.5%.

Cylinder type—L-head, 70%; T-head, 30%.

No. of piston rings—three, 68.5%.

Width of rings—3/16 inch, 19%, 7/32 inch, 6%; ¼ inch, 69%; 5/16 inch, 6%.

No. of bolts in connecting rod heads—four, 89%; 2, 11%.

Crankshaft drilled for lubrication, 59%.

BRITISH TRUCK MOTOR PRACTICE (*Continued*).

Crankcase inspection doors—none, 5.5%; one side, 78%; both sides, 16.5%.

Camshaft drives—silent chain, 44%; helical spur, 28%; spur, 22%; roller chain, 6%.

Diametral pitch of camshaft gears—8, 10 and 12, chiefly 8.

Pitch of silent chains—½ inch, except in one case, ⅝ inch.

Cross shaft for pump and magneto—37%.

Main bearing lubrication—pressure, 67%; splash, 32%.

Crankpin lubrication—pressure, 50%; splash, 50%.

Piston pin lubrication—splash, 100%.

Engine piston displacement = 150 + (20 × tons loaded weight) cubic inches.

BEARING MATERIALS.

	Piston Pin	*Crank Pin*	*Main Bearing*
Phosphor bronze	69%		
Special bronze	12.5%		
White metal		65%	70%
Die cast white metal		18%	18%
Gun metal shell, white metal lined		12%	12%
Gun metal	6%	5%	
Case hardened steel	12½%		

VALVE TIMING.

	Early	*Late*	*Average*
Inlet valve opens	0°	+15°	+9°
Inlet valve closes	+11°	+48°	+27.5°
Exhaust valve opens	—56°	—40°	—47°
Exhaust valve closes	0°	+10°	+ 5.5°

INDEX.

Acceleration Forces, Table of 46
Adiabatic Changes of State 15
Admission Stroke 19
A. L. A. M. Rating Formula 406
Air, Atmospheric 6
Air Cooled Exhaust Valves 528
Air Cooling More Difficult in Large Cylinders 521
Air Cooling of Four Cylinder Motors 525
Air Cooling of Two Stroke Motors 464
Air Cooling Used by Daimler 521
Air Displacement, Constant Level System 330
Air Required to Burn Gasoline 7
Air Resistance 487
Air, Weight and Properties of 6
Aluminum Alloys, Properties of 305
Aluminum Pistons 161
Automobile Club of France Muffler Trials 371
Auxiliary Exhaust Ports 285
Babbitt Metal, Keying 346
Baffling Plates (in Radiators) 471
Balance, Effect of Off-Setting on 177
Balance Weights, Calculation of 62
Balance Weights on Six Throw Crankshafts 205
Ball Bearings, Radial 211
Baume Scale 3
Baush Multiple Drill 345
Bearing Bushings 343
Bearing Bushings, Dowelling 347
Bearing Bushings, Relieving of 355
Bearing Cap Lock 319
Block Construction, Advantages of 79
Block Cylinders 97
Blower, The 527
Blower Cooling 525
Bore-Stroke Ratio 409
Brake, The Motor as a 418
Breather Tubes 315
Bronze Bushings, Babbitt Lined 353
Bronze Backed Bushings, Manufacturing 346
Bronze Bushings, Manufacture of Split 350
Bushing Dimension, Rules for 347
Cage Construction 95
Cam Followers, Types of 249
Cam Gear Housing 317
Cam Grinding Attachment 282
Cam Levers 275

Pages.
Cam Lift Curves..... 266
Cam Outlines, Comparison of..... 269
Cam Side Thrust..... 270
Cams, Manufacture of..... 253
Cams, Types of..... 250
Camshaft Bearings..... 279
Camshafts, Dimensions of..... 278
Camshaft Drive, Arrangement of..... 281
Camshaft, Drive, Silent Chain..... 296
Camshaft Gears, Dimensions of..... 295
Camshaft Gears, Method of Securing..... 295
Camshafts, Integral and Built up..... 277
Camshaft Mounting..... 281
Camshafts, Oiling..... 281
Carbon Deposits Cause of Preignition..... 522
Carburetor Flanges..... 362
Carburetors for Two Stroke Motors..... 456
Car Speed, Fluctuations in..... 385
Characteristic Curves..... 413
Charge Deflectors, Two Stroke..... 447
Charles' Law..... 12
Cincinnati Vertical Miller..... 342
Circulating Splash System..... 328
Circulation Indicator..... 338
Circulation Systems, Relative Standing of..... 467
Circulation Control, Automatic..... 517
Combustion Chamber, Ideal Form of..... 76
Combustion Chamber Wall, Finished..... 522
Compression Chamber, Counter-Boring..... 114
Compression Calculation..... 24
Compression Leaks..... 562
Compression in Air Cooled Motors..... 522
Compression Relief Cams..... 334
Compression Space Calculation..... 34
Compression Stroke..... 28
Compression, Work of..... 25
Connecting Rod, Cross Section of..... 216
Connecting Rod Head..... 228
Connecting Rod Head Oil Spoon..... 231
Connecting Rod, Size of Studs for..... 230
Connecting Rod, Hinged Cap..... 228
Connecting Rod, Crank Pin Bearings for..... 230
Connecting Rod, Length of..... 215
Connecting Rod Materials..... 215
Connecting Rod, Parts of..... 215
Connecting Rod, Whipping Effect in..... 222
Connecting Rods, Manufacture of..... 235
Connecting Rods, Offset..... 231
Connecting Rods, Forked for V Engines..... 234
Connecting Rods, Tubular..... 221
Constant Acceleration Cam, Spring Force Required with..... 264
Constant Acceleration Cam, Laying Out..... 252
Constant Level Stand Pipe..... 337
Continuous Web Construction..... 322

Page.
Convection of Heat in Air Cooled Cylinders..... 523
Cooling Flanges 521
Cooling Flanges, Form and Dimensions of..... 524
Coté Two Stroke Motor..... 458
Counter Weights 59
Couplings, Magneto and Pump..... 299
Cradle Dynamometer, Electric..... 551
Crank Arms of Six Cylinder Cranks, Form of Long..... 192
Crank Case, Barrel Type of..... 310
Crank Case Bearing Caps..... 318
Crank Case, Bearings Between Halves of..... 308
Crank Case, Bearings in Upper Half of..... 309
Crank Case, Bearings in Lower Half of..... 309
Crank Case, General Design of..... 311
Crank Chamber Design, Two Stroke..... 444
Crank Case Inlets..... 443
Crank Case Materials..... 305
Crank Case, Objects of..... 305
Crank Case, One and Two Cylinder..... 306
Crank Case Sections, Thickness of..... 313
Crank Case Supporting Arms..... 314
Crank Cases, Boring of..... 344
Crank Cases, Four and Six Cylinder..... 307
Crank Cases, Manufacture of..... 341
Crank Chamber, Automatic Circulation in..... 331
Crank Chamber Joints Gas Tight, Making..... 446
Crank Moment 49
Crank Moment, Crank Angle Factor of..... 54
Crank Moment, Variation of..... 373
Crank Pin Lubrication..... 325
Crank Pin Turning Fixture..... 207
Crank Pin Turning Lathe..... 207
Crank Pins, Turning of..... 209
Crankshaft, Ball Bearing..... 211
Crankshafts, Balancing.....59, 185
Crankshaft Bearing Metal..... 320
Crankshaft Blanks 206
Crankshaft Grinder 209
Crankshaft Material 181
Crankshaft Material, Heat Treatment of..... 181
Crankshaft Oil Ring..... 228
Crankshaft Proportions 188
Crankshaft Thrust Flanges..... 192
Crankshafts, Four Throw, Two Bearing..... 194
Crankshafts, Four Throw, Three Bearing..... 189
Crankshafts, Four Throw, Five Bearing..... 188
Crankshafts, Six Cylinder, Three Bearing..... 193
Crankshafts, Six Cylinder, Four Bearing..... 195
Crankshafts, Six Cylinder, Seven Bearing..... 199
Crankshafts, Eight Cylinder, Two Bearing..... 202
Crankshafts, Twelve Cylinder..... 203
Crankshafts, Front and Rear Ends of..... 205
Crankshafts, Hollow 209
Crankshafts, Machining of..... 206

Page.
Crankshafts, Testing the Balance of 212
Crankshafts, Types of 183
Cross Head Type Piston 160
Cylinder Baffle Plate 323
Cylinder Bolts 312
Cylinder Bore, Length of 87
Cylinder Castings, Testing 104
Cylinder Check Valve 422
Cylinder Grouping 79
Cylinder Material 80
Cylinder Head Closures 118
Cylinder Pattern Making and Molding 104
Cylinders, Boring and Grinding 111
Cylinders, Facing and Drilling 107
Cylinders, Horizontal vs. Vertical 75
Cylinders Integral with Crank case 101
Cylinder Ports, Symmetrically Arranged 454
Cylinder Wall, Side Thrust on 149, 174
Cylinder Wall Temperature, Effect on Power Output of 417
Cylinder Wall Temperature, Effect on Thermal Efficiency 417
Cylinder Wall Temperature, Limits of 522
Cylinder Walls, Stresses in 81
Cylinder Walls, Thickness of 82
Cylinders Must Be Cooled, Why 520
Cylinders, Number of 37
Data of British Truck Engines 591
Diagram, Photographing the 543
Diehl Electric Dynamometer 553
Differential Piston Two Stroke Motor 457
Distributor Valve Two Stroke Motor 460
Drive, Arrangement of 291
Dynamometers 544
Dynamometer Installation, A. C. A. 553
Eccentric vs. Concentric Rings 131
Electric Cradle Dynamometer 551
E-M-F Lubricating System 331
Eight Cylinder Motor, Balance of 73
Elmore High Duty Two Stroke Motor 462
Error in Manographs, Sources of 536
European Data and Deductions 405
Exhaust Manifold 363
Exhaust and Suction Curves 31
Exhaust Ports, Auxiliary 285
Exhaust Pressure Reducing and Control Valve 422
Exhaust 22
Exhaust Valves, Air Cooled 528
Expansion, Ratio of 413
Expansion, Work of 29
Explosion Pressures, Maximum 143
Fan Action, Theory of 485
Fan Belt Practice 503
Fan Capacity Required 499
Fan Design Details 500

Page.
Fan Drives 502
Fan Drives, V-Belt 504
Fan Drives, Positive 505
Fan Dynamometer 546
Fan Dynamometer Calibration Curve 550
Fan Dynamometer, Tracy's 549
Fan Housing 507
Fan Wheels 388
Fan Efficiency Increased by Concaving 498
Fan Mountings 500
Fans, Air Delivery of Tapering Blade 491
Fans, Air Delivery of Helical 492
Fans, Helical Blade 491
Fans, Objects of 483
Fans, Power Absorbed by Plane Blade 495
Fans, Power Absorbed by Helical 494
Fans, Pressed Steel 484
Fans, Types of 483
Faroux Power Output Formula 409
Firing Order, Effect of 364
Flank Circle (Mushroom Cam), Determination of Radius of 262
Flared Tube Unions, S. A. E. 590
Flexibility, Effect of Length of Stroke on 412
Flexibility of Starting of Motor and Car, Effect on 377
Flywheel, Bursting Strength of 384
Flywheel Capacity Required 381
Flywheel, Cast Steel 388
Flywheel, Centrifugal Force on 383
Flywheel, Effect on Flexibility 377
Flywheel, Effect on Motor Starting of 377
Flywheel, Energy Stored in 378
Flywheel, Fan Type 388
Flywheel Flanges 205
Flywheel, Object of the 373
Flywheel Rim, Web or Spokes 387
Flywheels, Balancing 391
Flywheels, Keying of 387
Flywheels, Machining of 389
Foot-Pound, The 10
Force Feed 324
Force Feed, Non-Splash System 324
Four Cycling of Two Stroke Motor 456
Four Cylinder Motor, Balance of 66
Four Cylinder Two Stroke Motor 460
Franklin Motor, Volumetric Efficiency Test on 244
Fuel Consumption Tests 587
Fuel Efficiency Tests 248
Gas Feed Through Valve 243
Gas Pressure Derived from Cylinder 422
Gases, Perfect 11
Gasoline, Heat Value of 6
Gasoline, Chemical Composition of 2
Gasoline Combustion, Temperature of 17
Gasoline, Density of 3

Page.
Gasoline Mixtures, Range of Inflammability of..... 9
Gasoline, Products of Combustion of..... 7
Gasoline, Vapor Density of..... 5
Gasoline, Viscosity of..... 5
Governor, Gas Inertia Type..... 402
Governor, Hydraulic Type..... 401
Governor, Marine Type..... 400
Governor Springs, Calculation of..... 395
Governor, Vertical Type..... 399
Governors, Centrifugal..... 395
Governors, Hunting of..... 397
Governors, Types of Centrifugal..... 397
Gravity Feed..... 324
Heat Absorbed by Cooling System, Amount of.....468–520
Heat Absorption, Reduction of..... 522
Heat Discharged with Exhaust..... 520
Heat Value, Higher, Lower..... 8
Heptane, Properties of..... 3
Hexane, Properties of..... 3
Holes and Drain Plugs, Filling..... 339
Hookham Joint..... 301
Horse Power Formula..... 403
Hospitalier Manograph..... 531
Hydraulic Dynamometers..... 554
Ignition and Combustion..... 21
Ignition and Combustion by Manograph, Studying..... 537
Ignition Points in Two Stroke Motors..... 456
Indicators, Piston Type..... 531
Inertia Force, Crank Angle Factor of..... 49
Inertia of Gases, Effect of..... 410
Inlet Manifold..... 360
Inlet Valves, Automatic..... 239
Inlet Valves, Ported..... 288
Inspection Hole Covers..... 322
Isothermal Changes of State..... 11
Jacket Space, Thickness of..... 83
Joule's Equivalent..... 10
Knight Motor, The..... 425
Knight Motor, Test Results of..... 435
Kramer Governor..... 402
Knocks, Location of..... 561
Lanchester Anti-Vibrator..... 67
Lanchester Vibration Damper..... 72
Late Ignition Shown by Diagrams..... 542
Leather Couplings..... 300
Legros Two Stroke Motor.....460–463
Lubrication of Two Stroke Motors..... 456
Lubrication of V Motors..... 341
Magneto Bracket..... 321
Manganese Bronze, Properties of..... 305
Manifold Joints..... 361
Manograph, The..... 531
Manograph, Construction of..... 532
Manograph Diagram..... 539

Page.
Manograph, Four Cylinder 538
Manograph, Use of 539
Manographs, Quadruple 538
Marmon Oiling System 327
Mead Rotary Valve Motor 439
Mean Effective Pressure 405
Mechanical Equivalent of Heat 10
Mechanical Oilers 324
M. E. P. Curves 408
Motor Tests 529
Motors, Firing Order of V 366
Motors, Weight of 423
Motor, The, as a Brake 418
Muffler, Back Pressure of 371
Muffler, Baffle Plate Type 368
Muffler, Concentric Cylinder Type 368
Muffler Design 367
Muffler, Ejector Type 370
Muffler Location 371
Muffler Outlet 371
Muffler, Small Tube Type 369
Mushroom Type Cam Follower 253
Mushroom Type Cam, Laying out 252
Mushroom Cam, Valve Speed and Acceleration with 253
Offsetting, Object of 169
Oil Circulation, Throttle Control of 341
Oil Conduits, Size of 340
Oil Distributor 339
Oil Drain Plug 337-340
Oil Filling Holes 340
Oil Grooves 330-348
Oil Guards 320
Oil Level Gauge 337
Oil Pressure Reguator 327
Oil Pump and Timer Drive 302
Oil Pumps, Types of 332
Oil Pumping 162
Oil Splash Trough, Adjustable 435
Oil Strainers 337
Oil with Gasoline, Mixing 332
Otto Cycle, The 19
Otto Cycle, Application of Formulae to 34
Otto, Dr. N. A. 19
Overlapping of Exhaust in Six Cylinder Motor 365
Packing Ring Arrangement in Knight Motor 427
Panhard-Knight Motor 426
Pentane, Properties of 3
Perfect Gases 11
Phase Adjustment of Manograph 536
Piston Acceleration 43
Piston Bosses 146
Piston Design, Sample 158
Piston Designs, Special 159
Piston, Function of the 120

Page.
Piston, Hour Glass Type 162
Piston, Hydraulically Forged Steel 374
Piston Pin 142
Piston Pin Bearing 227
Piston Pin Bearing Bushing 228
Piston Pin, Best Location of 155
Piston Pin, Calculation of 144
Piston Friction, Effect of 153
Piston Side Thrust, Distribution of 154
Piston Pin Fastened in Connecting Rod 143
Piston Walls, Thickness of 156
Piston Pins, Locking 146
Piston Position 40
Piston Pressure, Components of 49
Piston, Resultant Pressure on 46
Piston Ring Blanks, Dimensions of 138
Piston Rings, Forms of 122
Piston Rings Grinding 135
Piston Rings, Hand Fitting of 137
Piston Rings, Leakage Around 122
Piston Rings, Handling 142
Piston Rings, Material of 124
Piston Rings, Manufacture of 133
Piston Rings, Number and Location of 158
Piston Rings, Peening 138
Piston Rings, Pinning 142
Piston Rings, Special 141
Piston Rings, Stresses in 125
Piston Rings, Width of 132
Piston Speed and Acceleration in Offset Cylinders 172
Piston Valves 436
Pistons, Die Cast 162
Plunger Pump 335
Port Capacity, Calculation of 449
Port Dimensions, Knight Engine 427
Port Opening Area 432
Port Opening Integrals 453
Port Sizes 448
Power Indicator, The 529
Power from Given Cylinder Volume 416
Power Output 403
Power Output of Two Stroke Motor 462
Power Output Eurpoean Data on 404
Power Tests of Motor 558
Preignition Shown by Diagram 542
Pressure Variation in Cylinder 23
Proportion of Oil to Gasoline Used 457
Prony Brake, The 544
Pump Bracket 821
Pumps, Water 508
Pump Dimensions, Water 512
Pump Construction, Details of 514
Pump Drive 516
Pump Impeller, Vane Angles of 510

Page.
Pump for V Motors, Double 517
Push Rod Guides, Yoke Retainers for 274
Push Rods, Adjustment of 274
Push Rods, Design of 274
Radiating Surface in Air Cooled Motors 523
Radiators, Capacity of Cellular 472
Radiators, Cellular Type 473
Radiator Flanged Tubing 473
Radiator Behind Engine 478
Radiator Mounting 476
Radiator Types 470
Radiators, Plate and Tube Type 473
Radiators, Truck 475
Reciprocating Masses, Balancing 60
Reciprocating Parts, Weight of 37-44
Renault Motor, Valve Timing Tests of 247
Reynolds Rotary Valve Motor 438
Rochas, Beau de 19
Rope Brake, The 545
Rotary Valves 437
Rotating Parts, Balancing 60
"Running in" of Motor 557
Sheet Metal Water Jackets 96
Shims for Bearing Adjustment 320
Silent Chain Drive Design, Rules for 299
Silent Chain Drives 297
Silent Chain, Whipping of 298
Six Cylinder Motor, Balancing of 70
Sleeve Valves, Lubrication and Cooling of 434
Sleeve Valve Motion and Timing 427
Sleeve Valve Motor Packing Ring Arrangement 427
Sleeve Valve Motor Port Dimensions 427
Sleeve Valves, Power Consumed by 434
Sleeve Valves, Silent Operation of 434
Slow Combustion Shown by Diagram 542
Specific Heats 12
Specific Heats, Changes with Temperature of 18
Specific Power Output, Maximum 416
Speed Control 393
Splash Lubrication 323
Split Bushings, Mandrel for Turning 353
Split Bushings, Manufacture of 350
Spring Rests 272
Standard Spark Plug Shell, S.A.E. 569
Standard Spark Plug Shell, De Dion (European) 569
Standard Screws and Nuts, S.A.E. 575
Standard Metric Threads 576
Starting Cranks 356
Starting Crank, Angular Position of 357
Starting Crank Automatic Lock 359
Starting Crank Bracket 359
Starting Crank, Effort Required on 357
Starting Crank Retainer 318
Starting Crank Support 318

Page.
Stearns-Knight Motor 431
Stethoscope 562
Supporting Arms, Separate 215
Taper Pins 568
Tappet Lever Adjustment 277
Tangential Cam, Laying out 251
Tangential Cam, Valve Speed and Acceleration with 254
Tangential Cams, Relation between Parts of 258
Temperature Scale, Absolute 11
Testing Stands 559
Test of Two Stroke Motor 463
Thermal Efficiency 83
Thermal Efficiency, Effect of Length of Stroke on 409
Thermal Unit, British 10
Thermo-Siphon System, The 478
Thermo-Siphon System, Size of Pipes for 482
Thermodynamics, Laws of 10
Throttling of Two Stroke Motors 456
Timing, Effect of Offsetting on 177
Timing Order, Effect of 364
Timing Marks on Flywheel 560
Tony Huber-Peugeot Two Stroke Motor 463
Toothed Gearing 570
Torque Reaction 63
Torsional Vibration of Crankshafts 71
Traction Resistance 565
Transfer Passage Gauge Screen 448
Transfer Passage, Two Stroke 447
Twin Cylinder Design 89
Two Cylinder Motor, Balance of 65
Two Stroke Cycle, The 441
Two Stroke Motors, Constructional Details of 465
Twelve Cylinder Motor, Balance of 74
Two Stroke Port Sizes 448
Two Stroke Port Timing 451
Two Stroke Ports, Finishing of 455
V-Type Motor, Balance of 65
Valve Action, Silence of 284
Valve Clearance 275
Valve Head, Form and Dimensions of 242
Valve in Head Cylinder 95
Valve in Head Motor, Power of 78
Valve Guide 245
Valve Lift 241
Valve Lift Curves, Comparison of 267
Valve Material 242
Valve Mechanism, Clearance in 275
Valve Motion and Timing, Knight Engine 427
Valve Opening Area 240
Valve Plugs 216
Valve Seat, Angle of 240
Valve Spring Formulæ 265
Valve Spring Pressure Required 238
Valve Spring Rests 272

Page.
Valve Springs, Calculation of 270
Valve Timing, Defects in 560
Valve Timing Tests 247
Valves, Arrangement of 75
Valves, Concentric 285
Valves, Enclosed 289
Valves, Mean Speed of Gas Through..... 243
Valves, Overhead 276
Valves with Cast Iron Heads..... 243
Vibration, Amplitude of 64
Vibration, Causes of 59
Volumetric Efficiency 244
Volumetric Efficiency, Effect of Length of Stroke on..... 409
Water Capacity of Cooling Systems..... 519
Water Manifolds, Determining Size of..... 469
Water Manifolds, Form of..... 469
Watson, Dr. W., Experiments on Motor Braking..... 419
Web Construction, Continuous..... 411
Weight Efficiency, Effect of Length of Stroke on..... 411
Weight of Reciprocating Parts..... 44
White & Poppe Power Output Experiments..... 405
Zephyr Piston 160

THE GASOLINE AUTOMOBILE

VOLUME II

TRANSMISSION, RUNNING GEAR AND CONTROL

LIST OF CHAPTERS

Chapter I.—General Layout of Cars.
Chapter II.—Friction Clutches.
Chapter III.—Sliding Change Speed Gears.
Chapter IV.—Planetary Change Speed Gears.
Chapter V.—Friction Disc Drive.
Chapter VI.—Universal Joints.
Chapter VII.—Differential Gears.
Chapter VIII.—Unit Power Plants, Transmission Axles.
Chapter IX.—Bevel Gear Drive and Rear Axle.
Chapter X.—The Worm Gear Drive.
Chapter XI.—The Chain Drive.
Chapter XII.—Bevel-Spur, Internal Gear and Four Wheel Drives.
Chapter XIII.—Brakes.
Chapter XIV.—Front Axles.
Chapter XV.—Steering Gears.
Chapter XVI.—Control.
Chapter XVII.—Frames.
Chapter XVIII.—Springs.
Chapter XIX.—Road Wheels.
Appendix, Plate Supplement.

P. M. HELDT
Nyack, N. Y.

PLATE SUPPLEMENT

LIST OF PLATES

	PAGE
Hupp Car Engine	606-7-8
Rutenber Car Engine	609
Buda Car Engine	610-11
Nash Car Engine	612-13
Benz Car Engine	614-15
Fiat Car Engine	616-17
Lozier Car Engine	618-19
Pierce-Arrow Truck Engine	620-21
U. S. A. Class B Truck Engine	622-25
Northway Car Engine	626
Franklin Car Engine	627
Continental Car Engine	628-29
Ferro Car Engine	630-31
Weidely Car Engine	632-33
Waukesha Truck and Tractor Engine	634-35
Twin City Tractor Engine	636

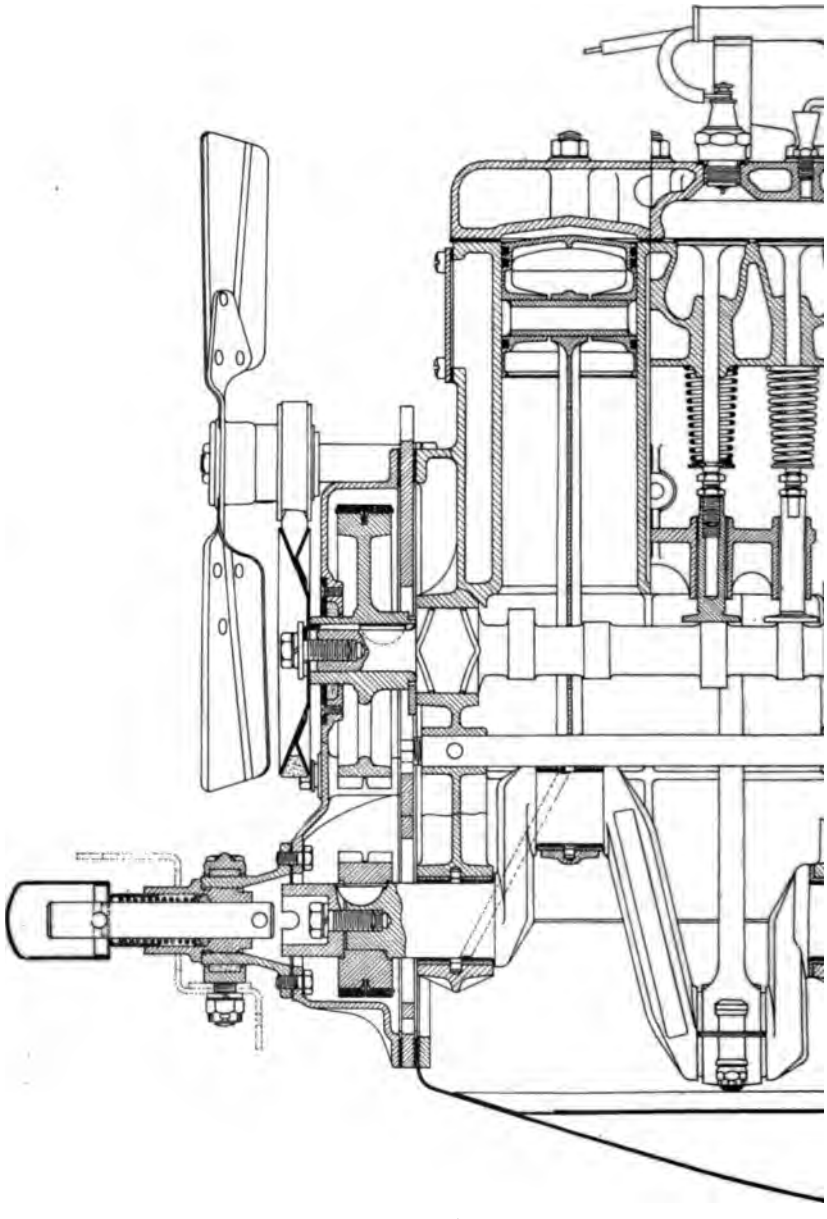

HUPP FOUR CYLINDER

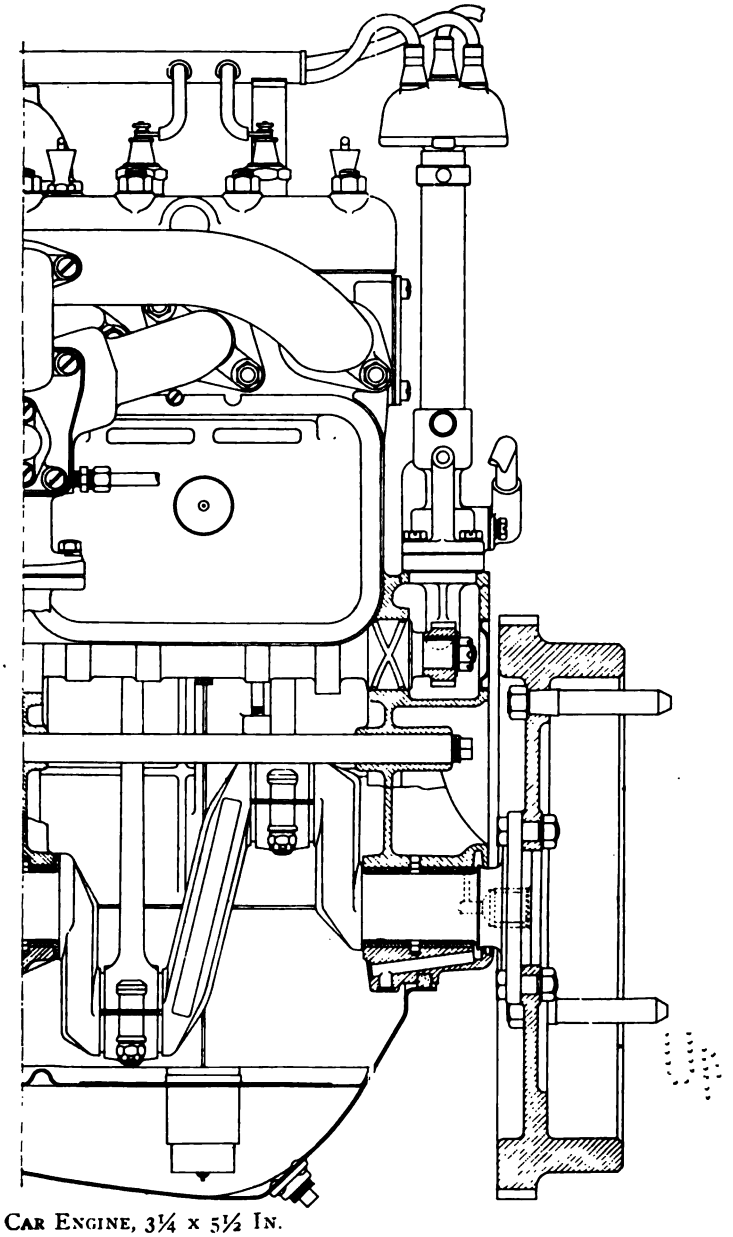

CAR ENGINE, 3¼ x 5½ IN.

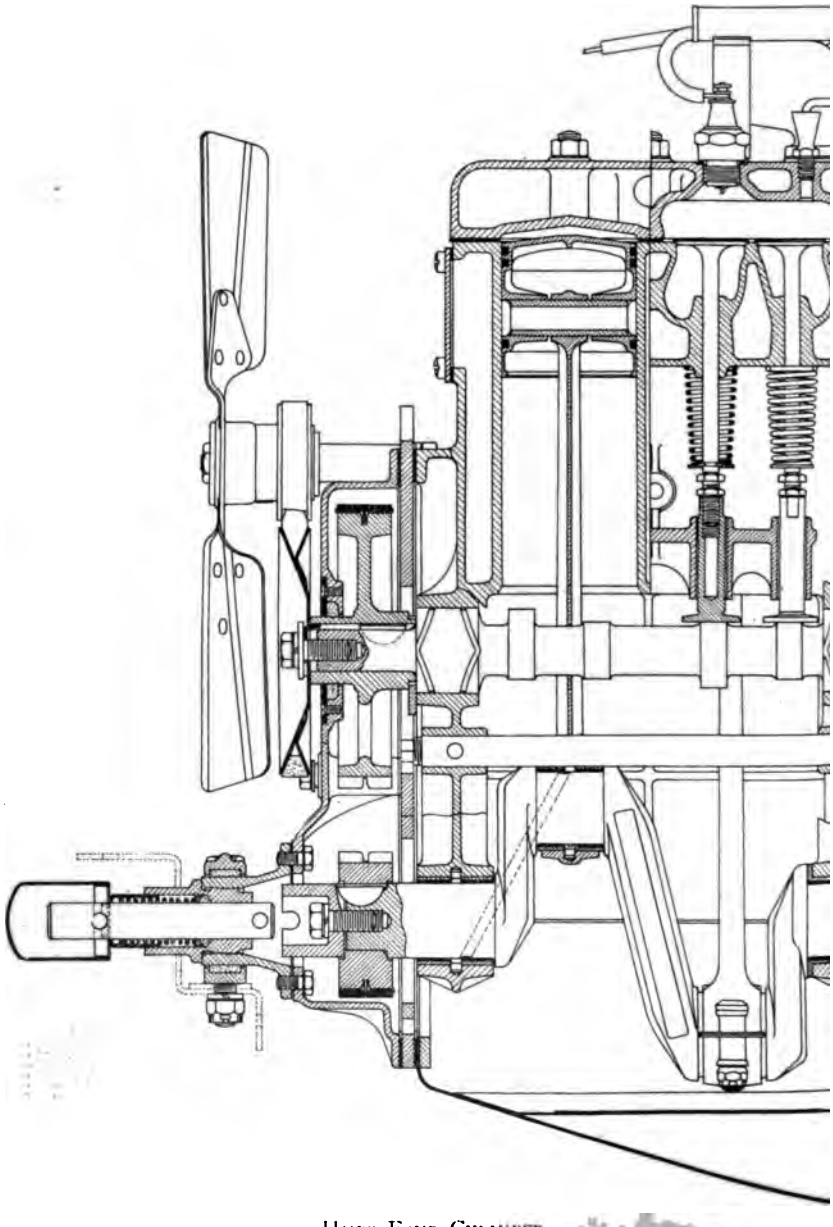

Hupp Four Cylinder

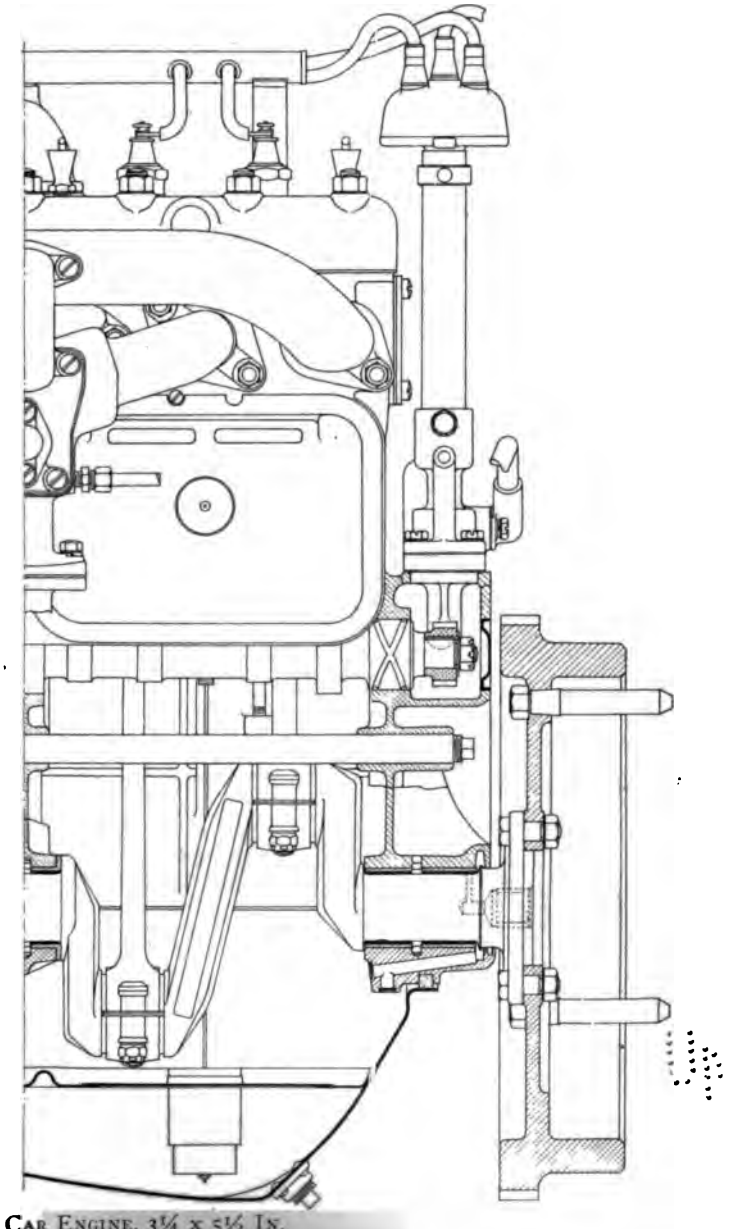

CAR ENGINE, 3¼ x 5½ IN.

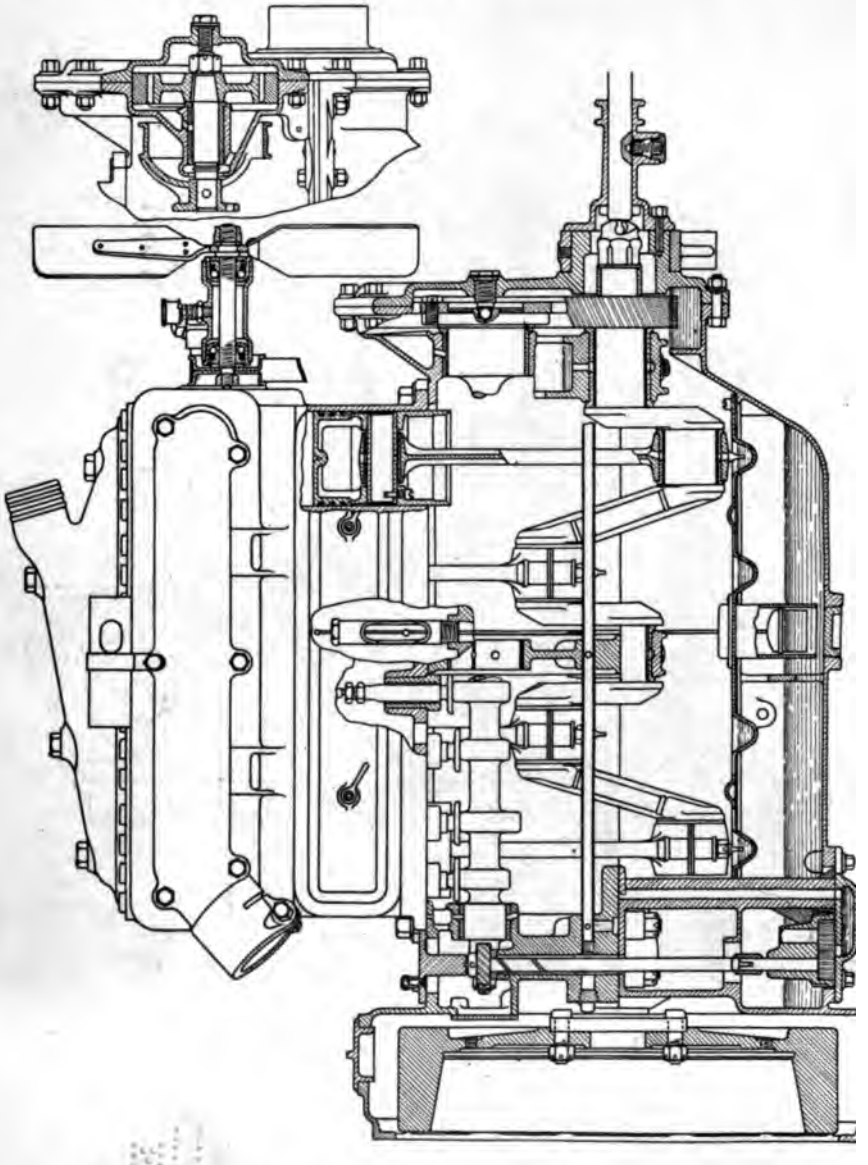

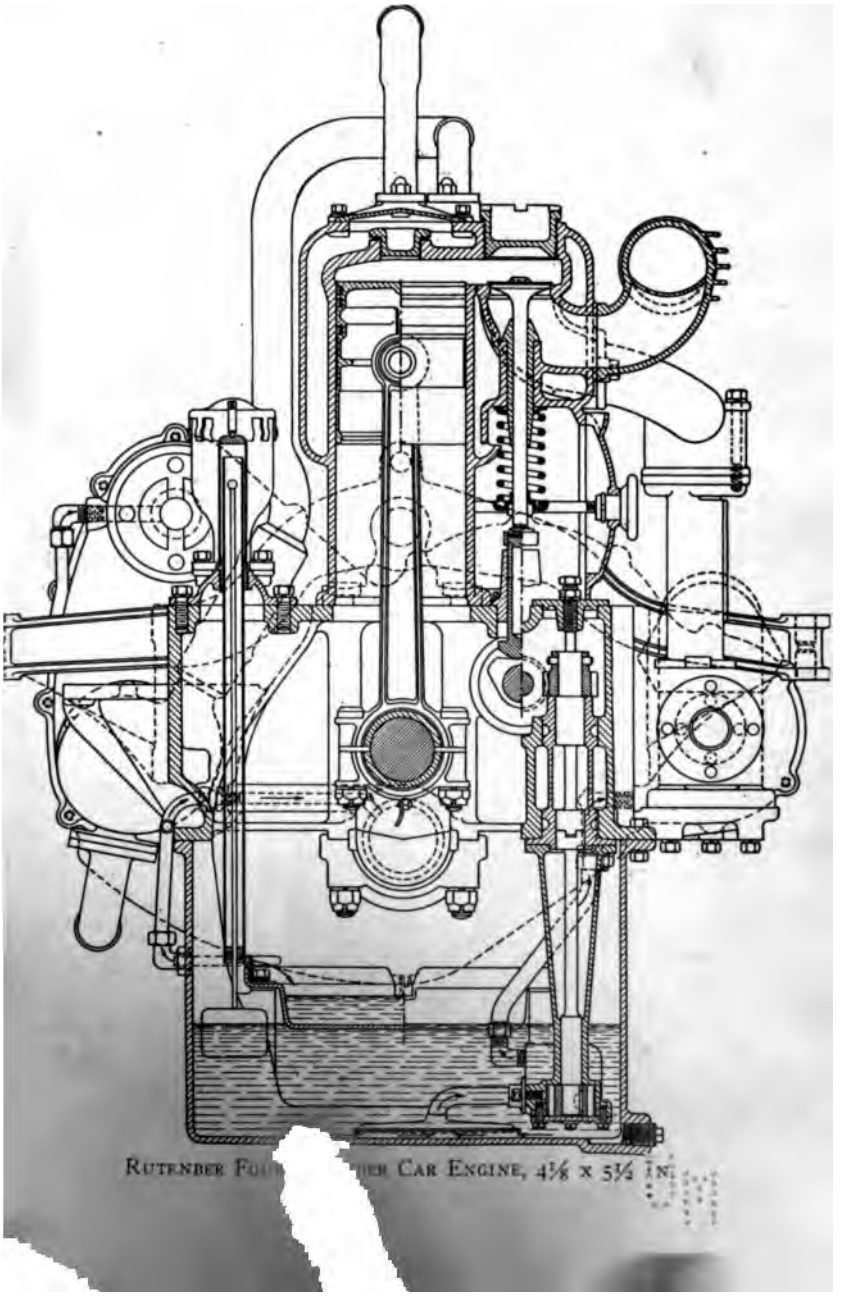

RUTENBER FOU[illegible] CAR ENGINE, 4⅛ x 5½ IN.

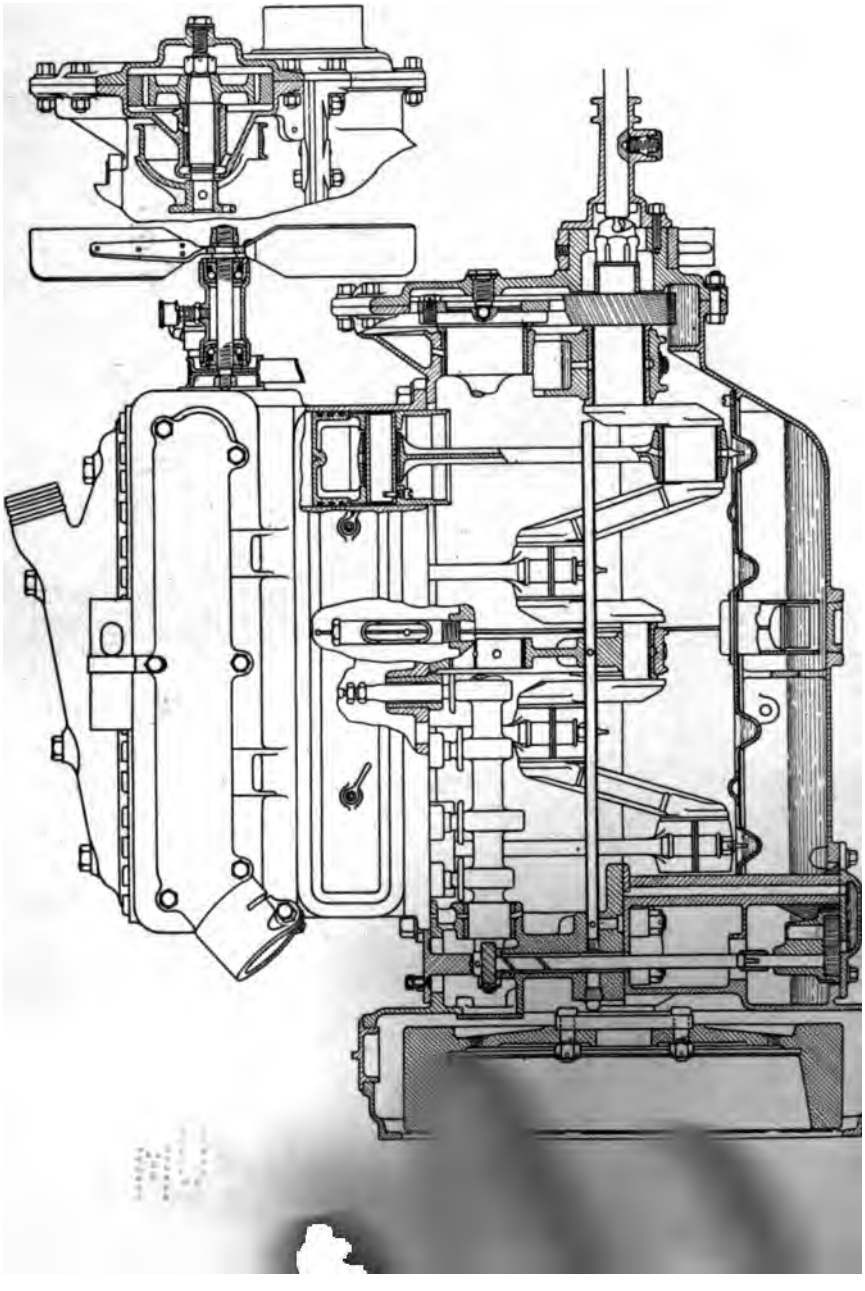

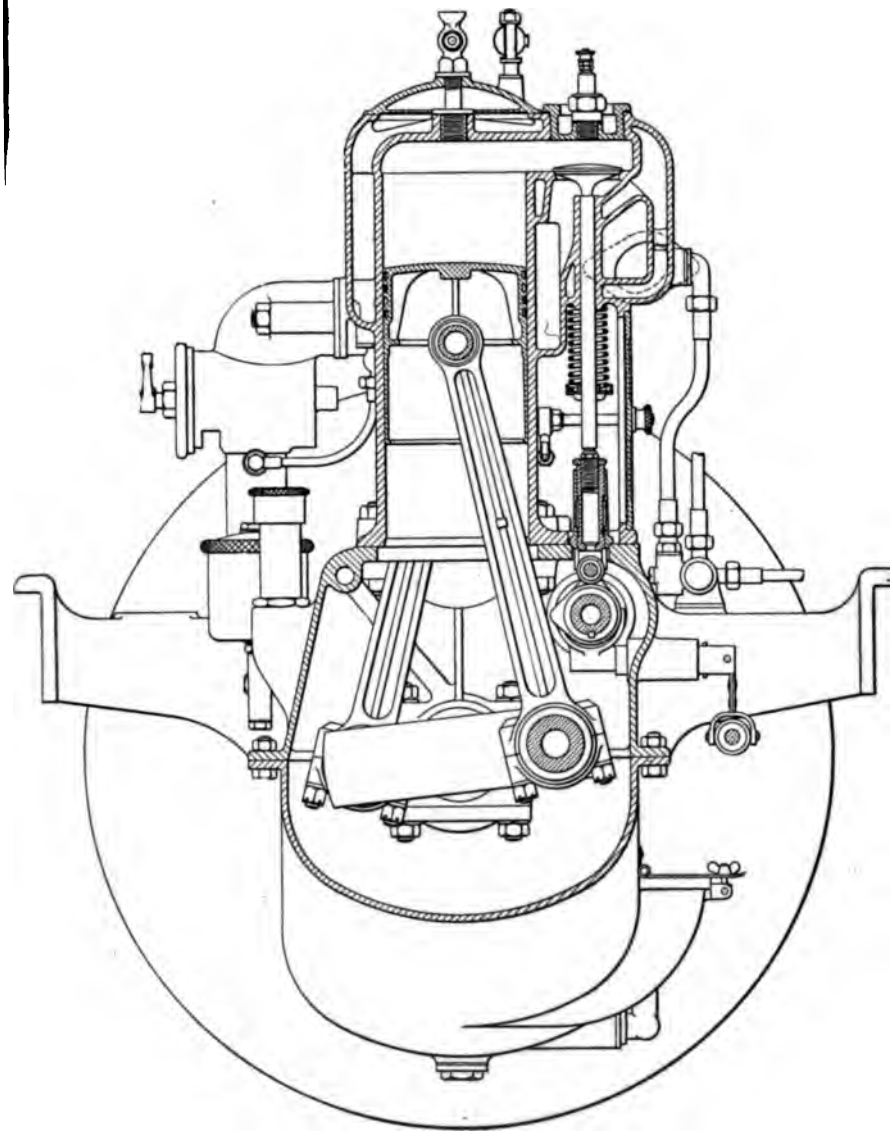

FIAT FOUR CYLINDER CAR ENGINE, 110 x 150 MM.

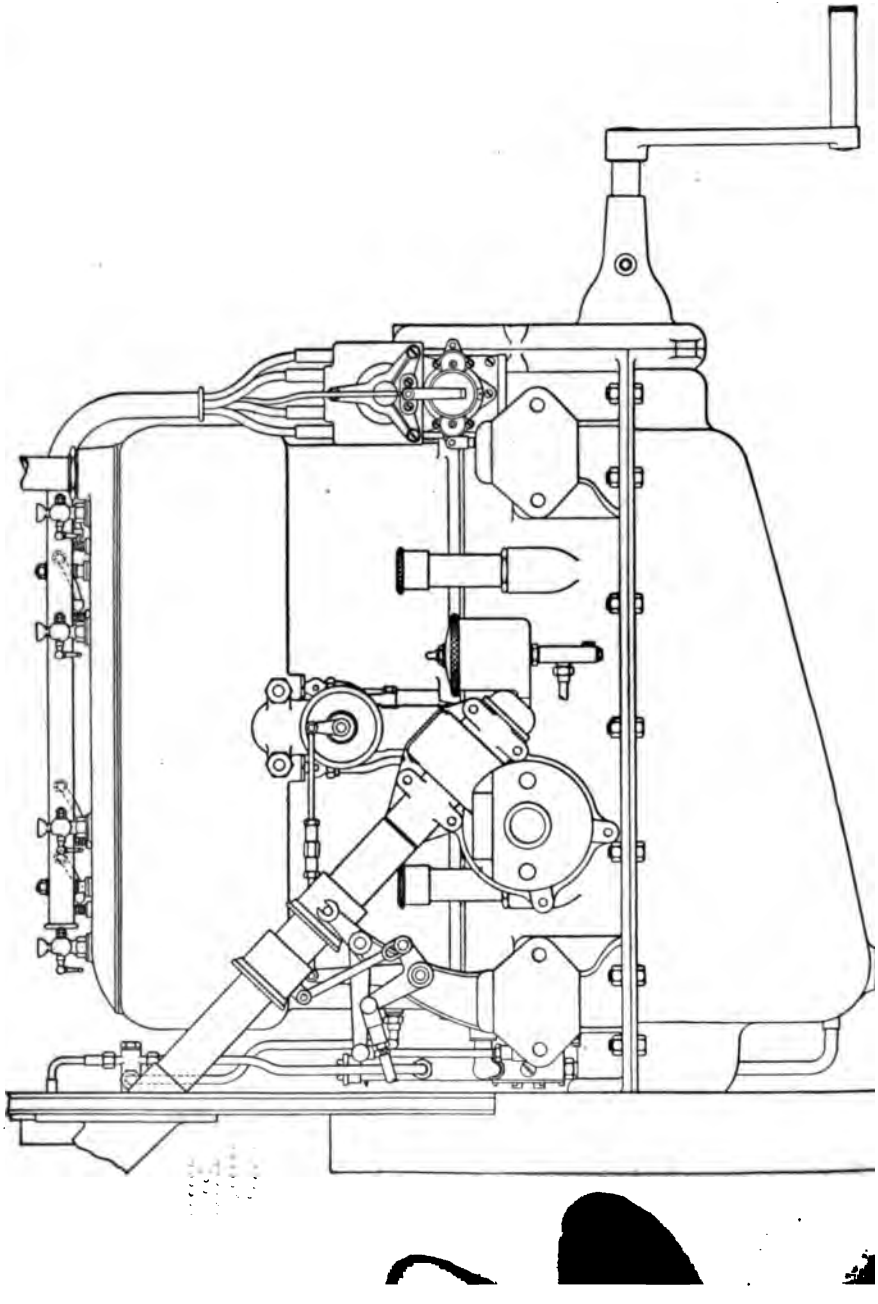

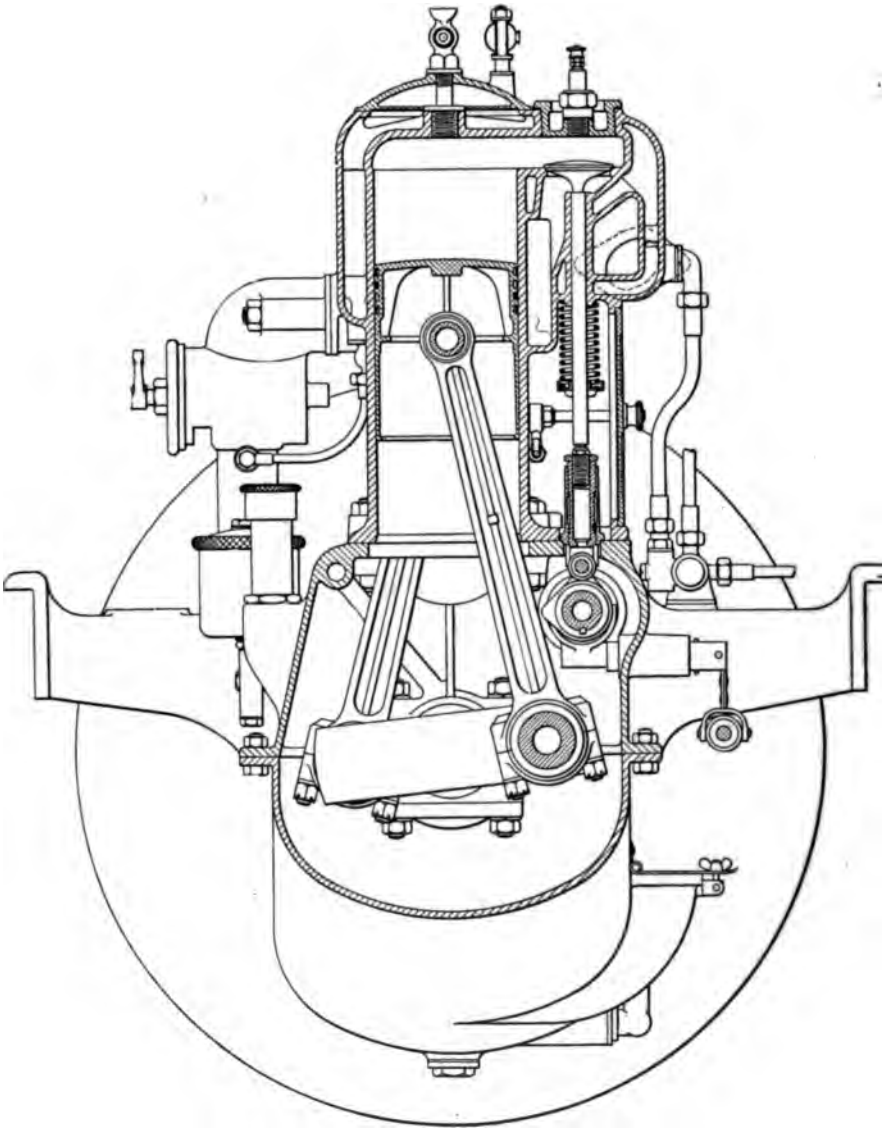

FIAT FOUR CYLINDER CAR ENGINE, 110 x 150 MM.

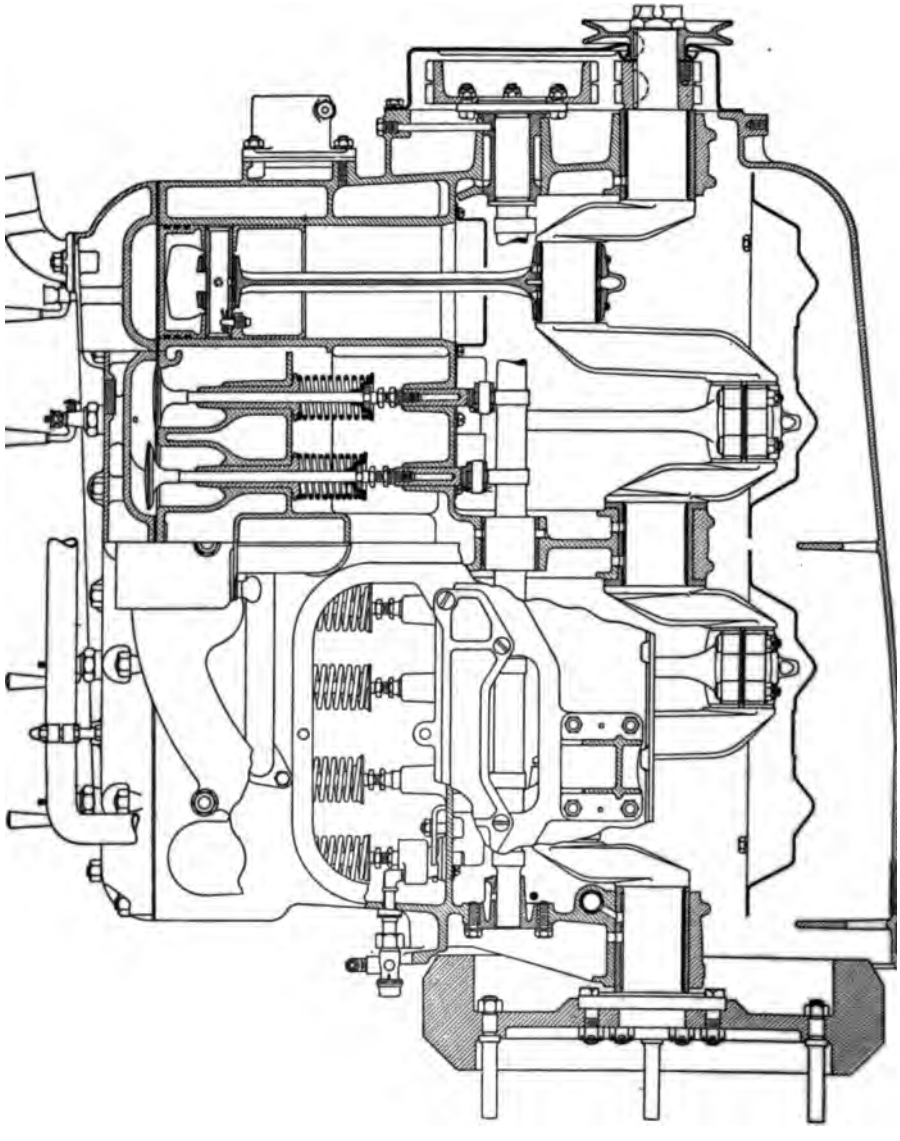

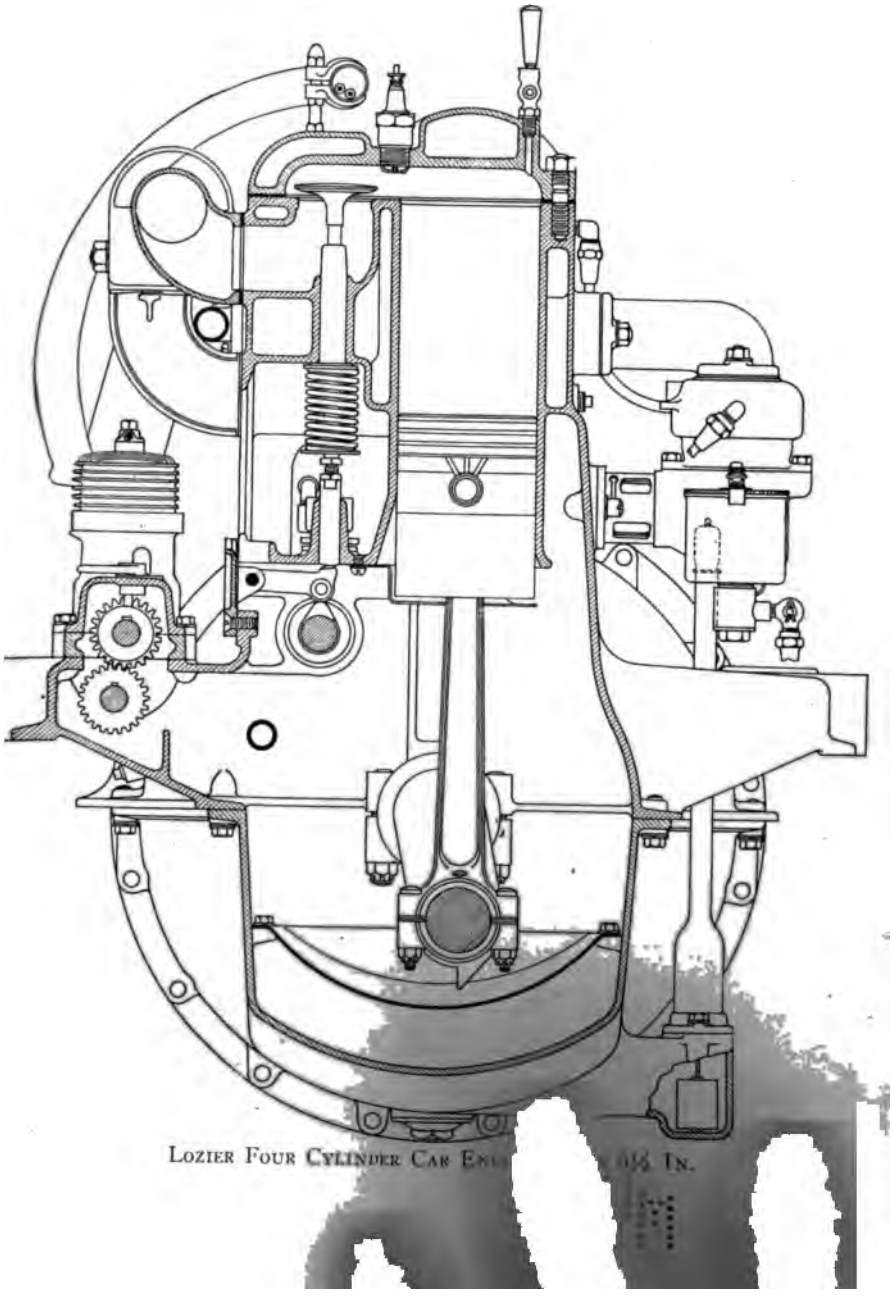

LOZIER FOUR CYLINDER CAR ENG[illegible] 6½ IN.

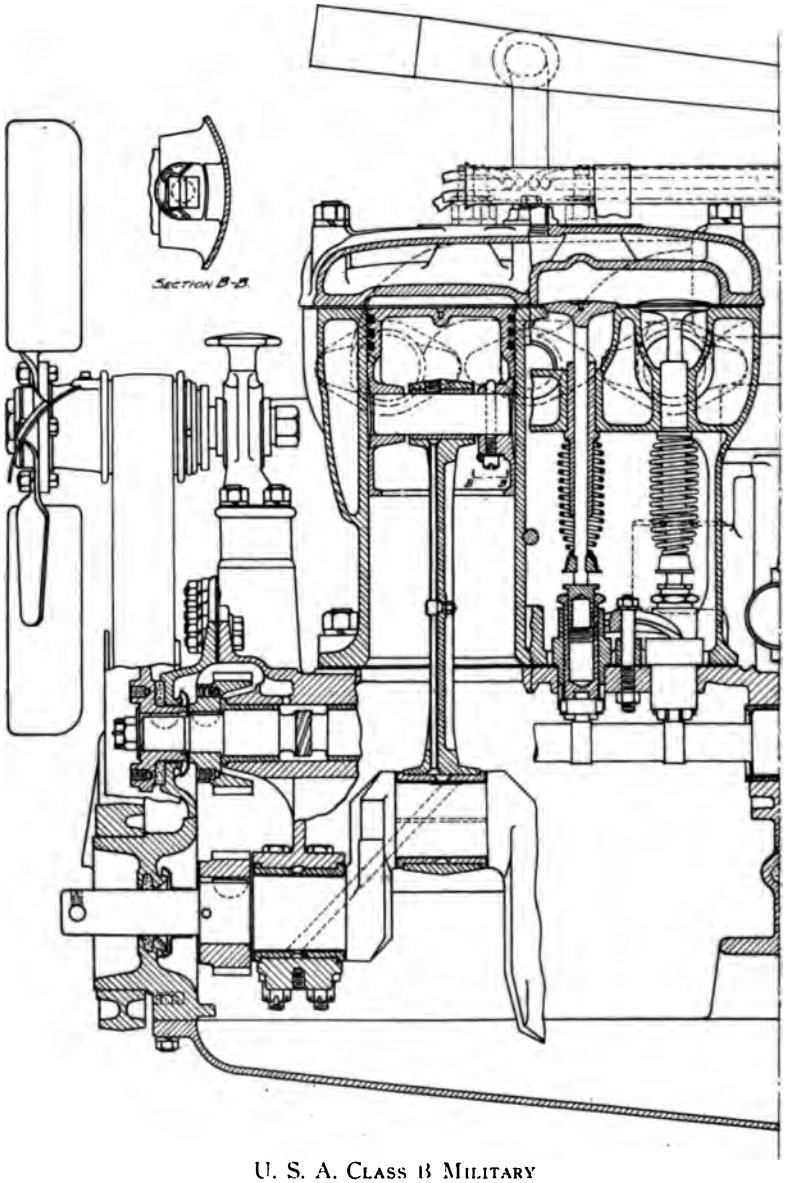

U. S. A. CLASS B MILITARY

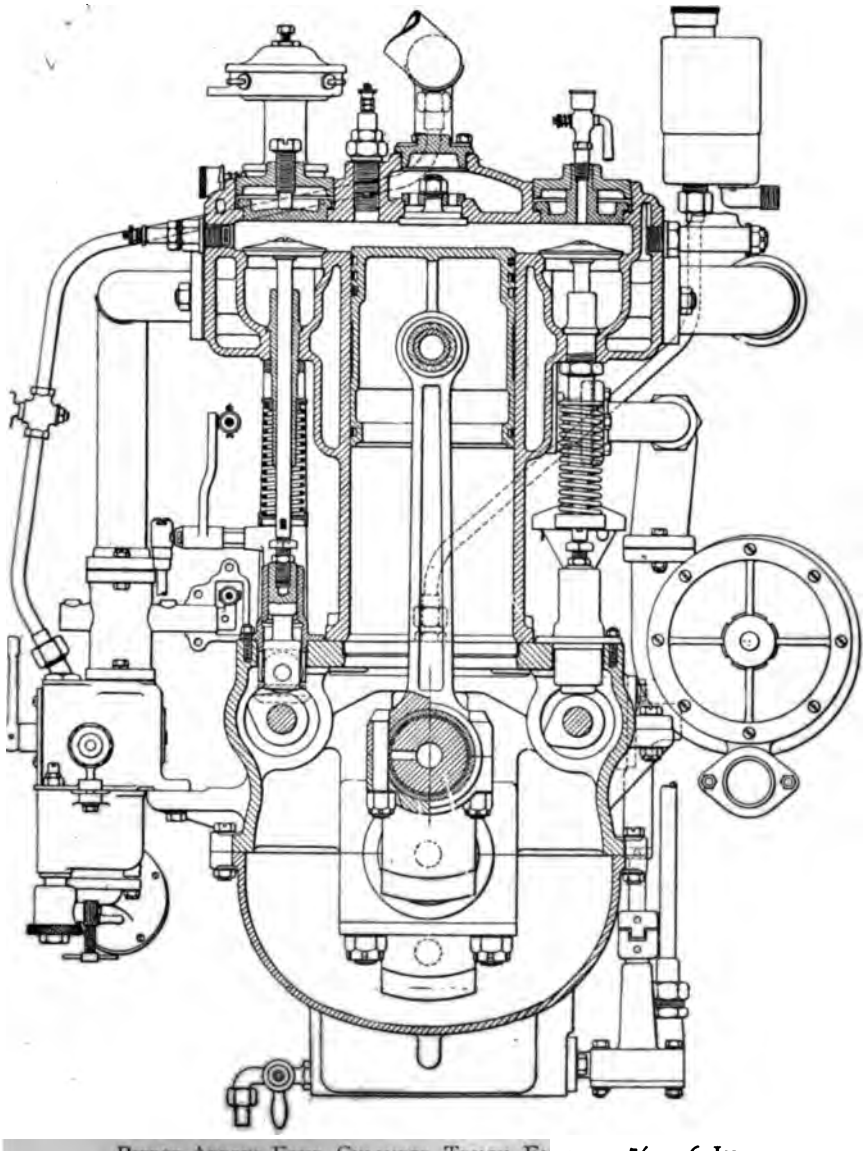

PIERCE-ARROW FOUR CYLINDER TRUCK ENGINE, 4⅞ x 6 IN.

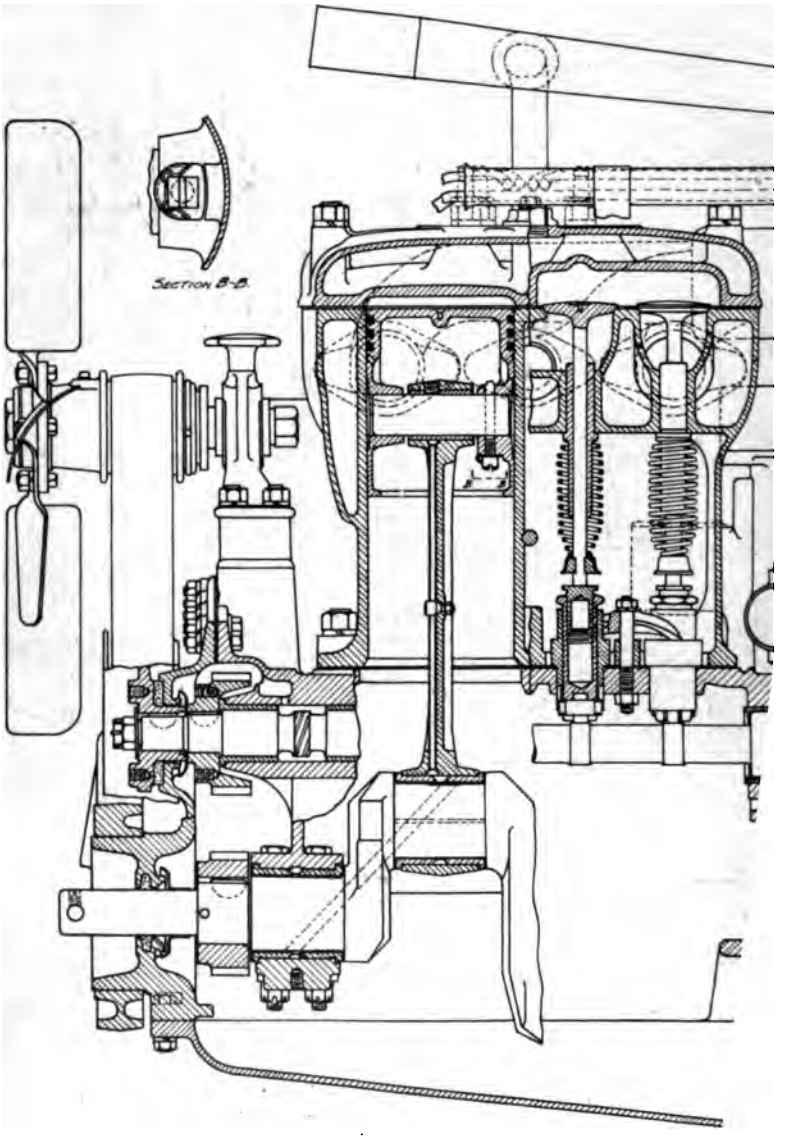

U. S. A. CLASS B MILITARY

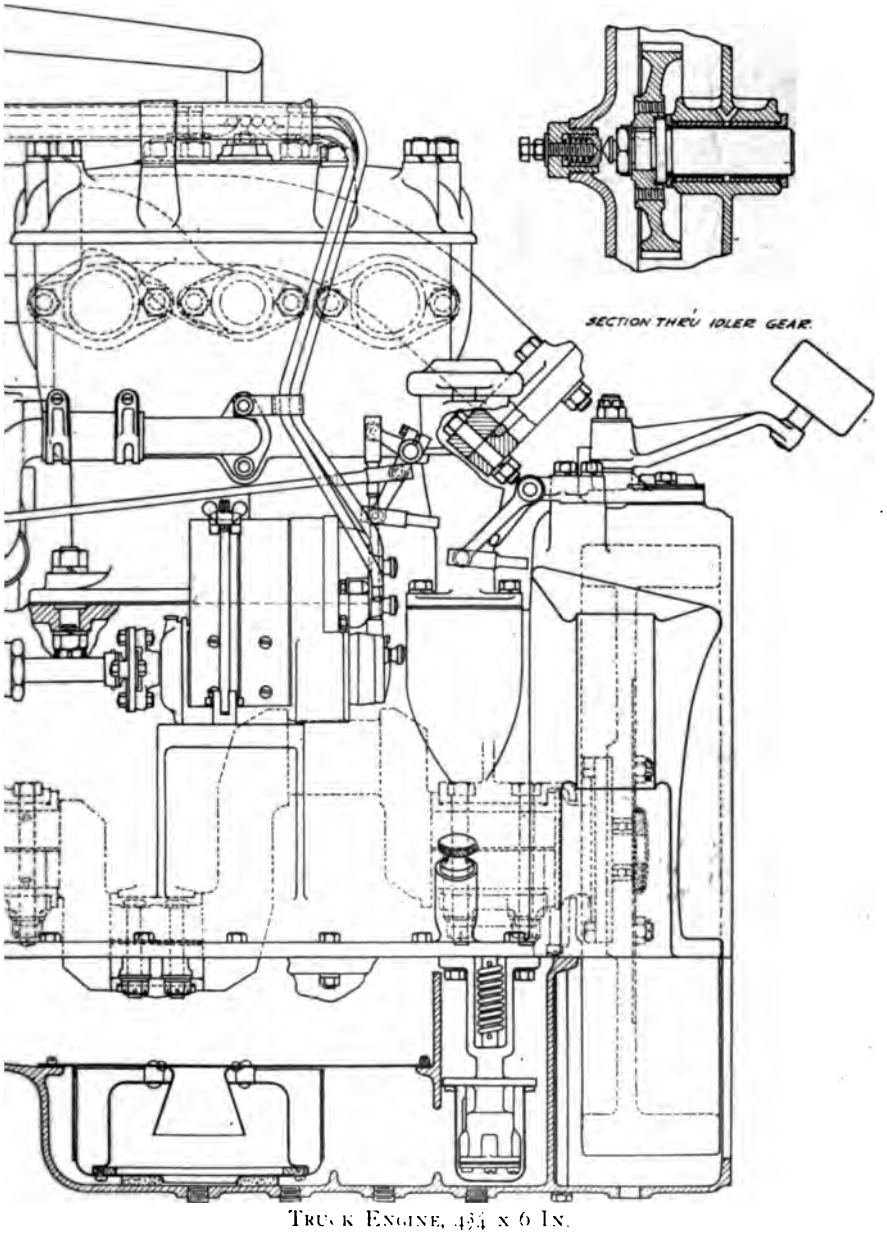

TRUCK ENGINE, 4¾ x 6 IN.

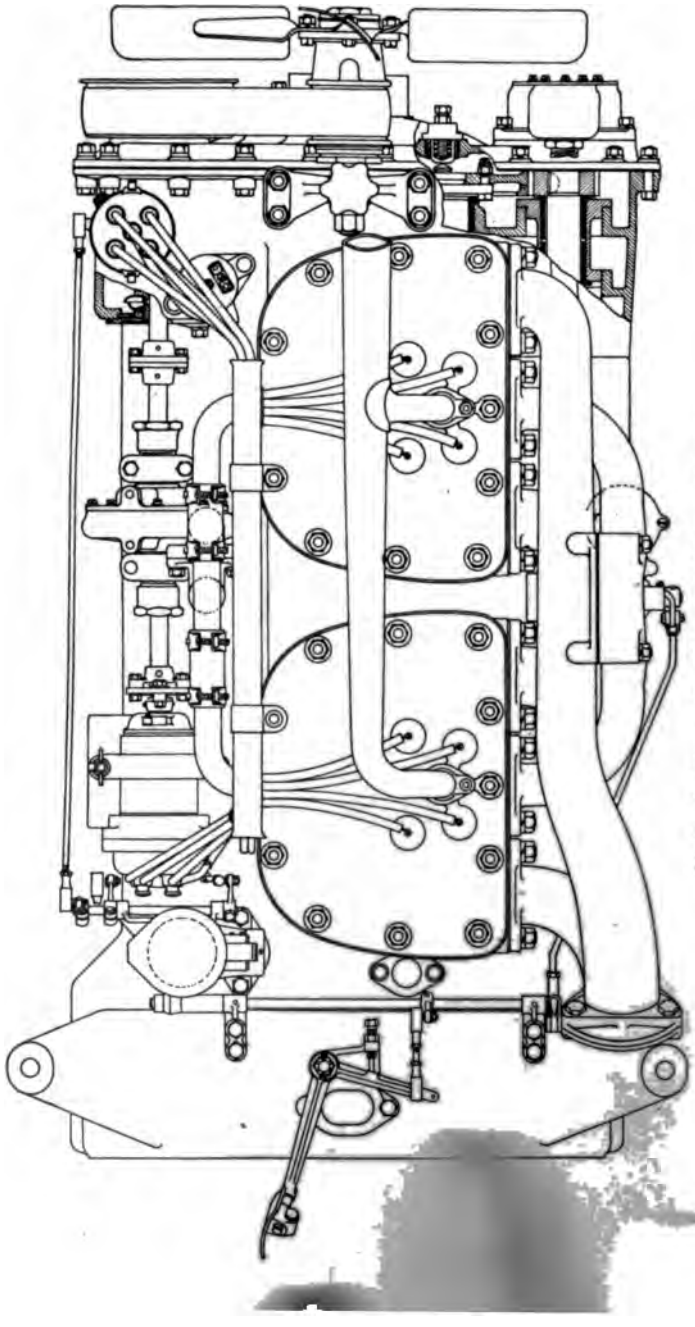

U. S. A. Class B Military Truck Engine

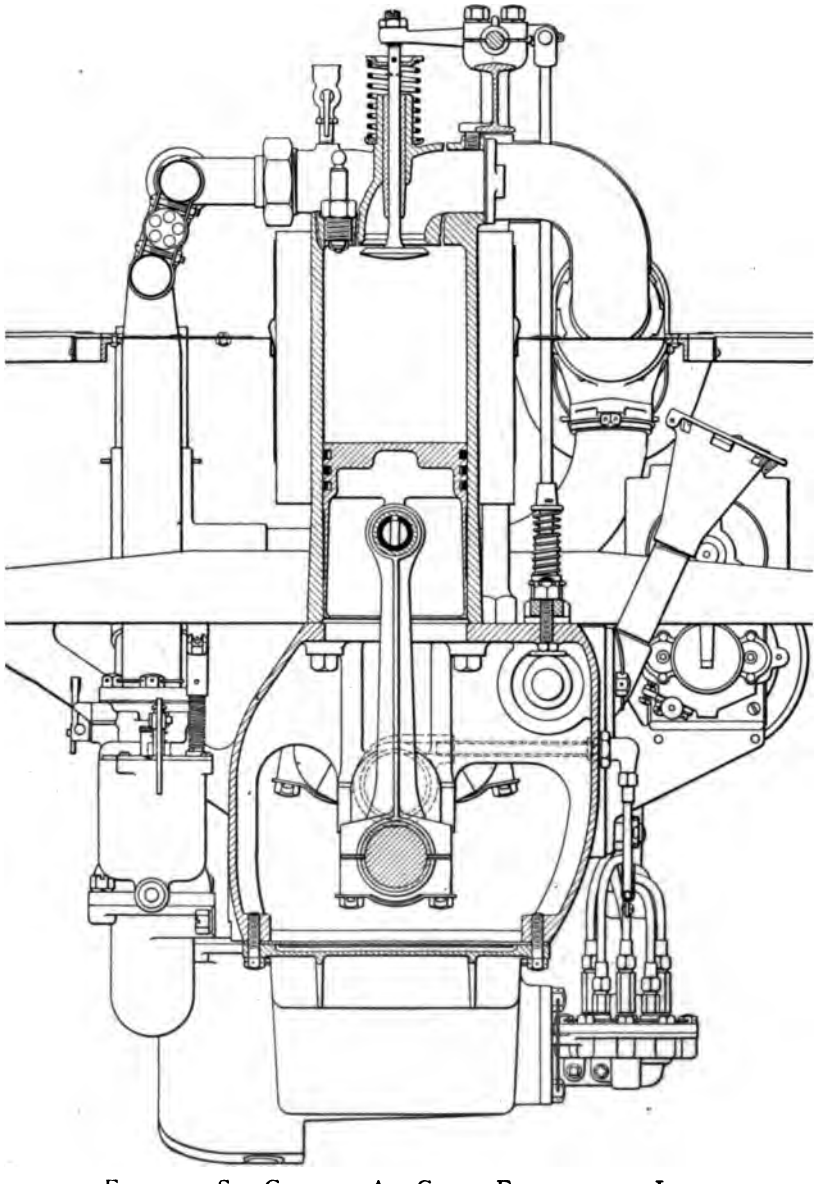

FRANKLIN SIX CYLINDER AIR COOLED ENGINE, 4 x 4 IN.

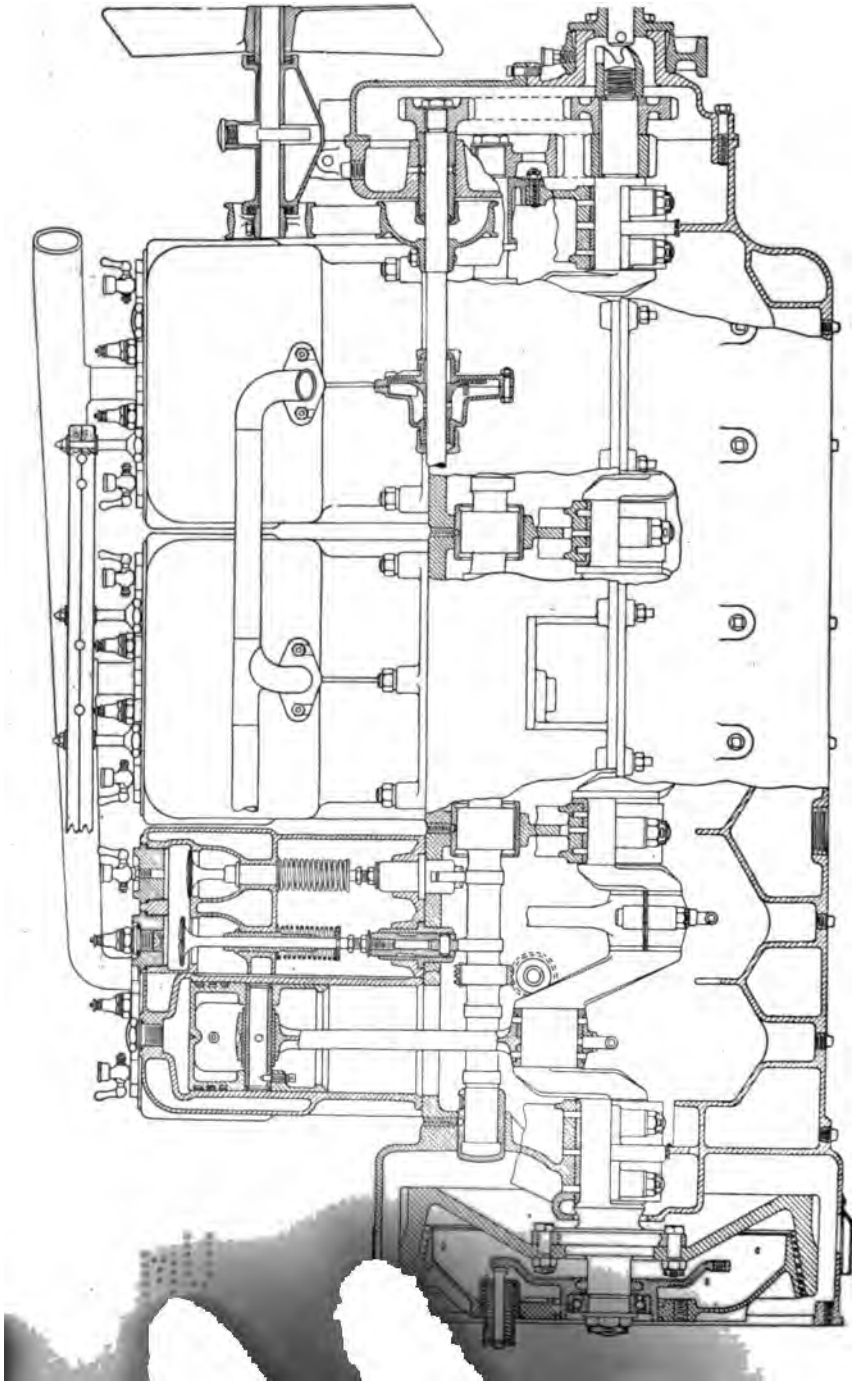

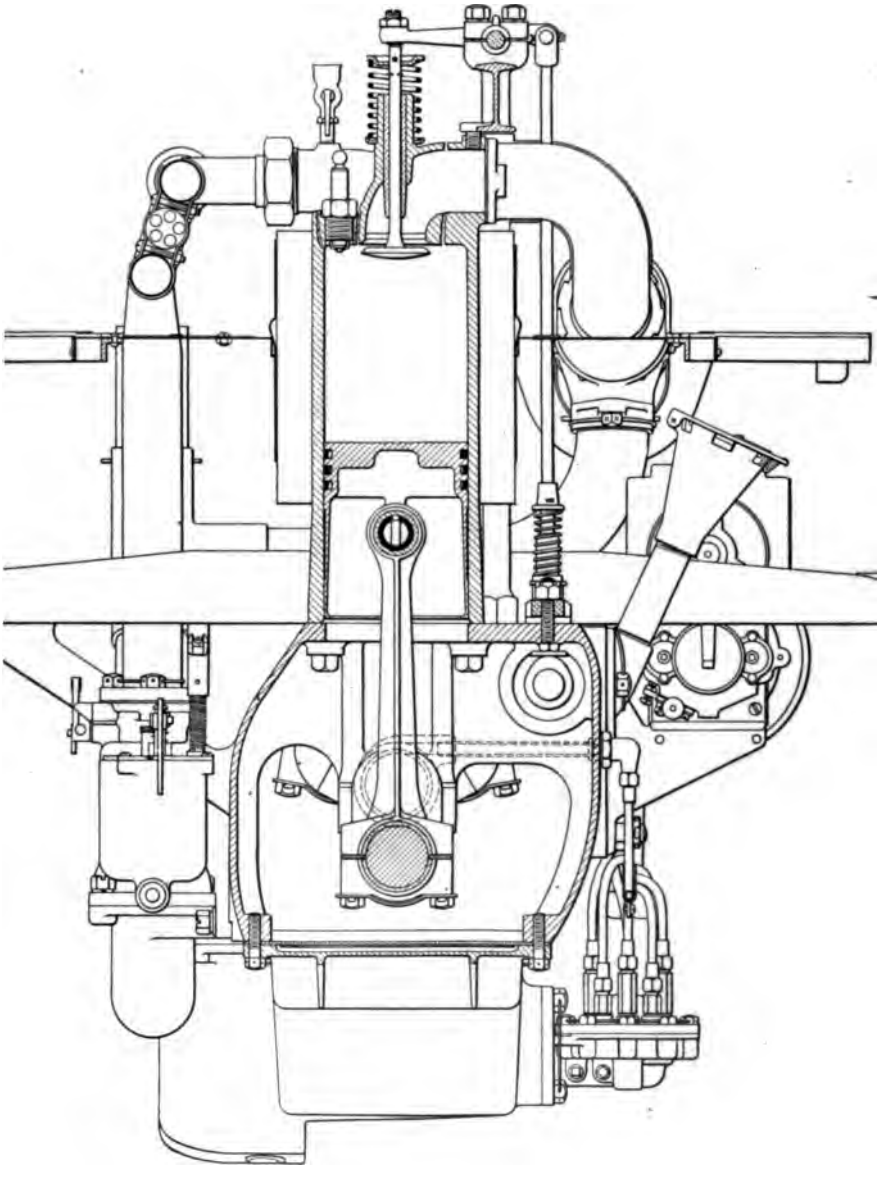

FRANKLIN SIX CYLINDER AIR COOLED ENGINE, 4 x 4 IN.

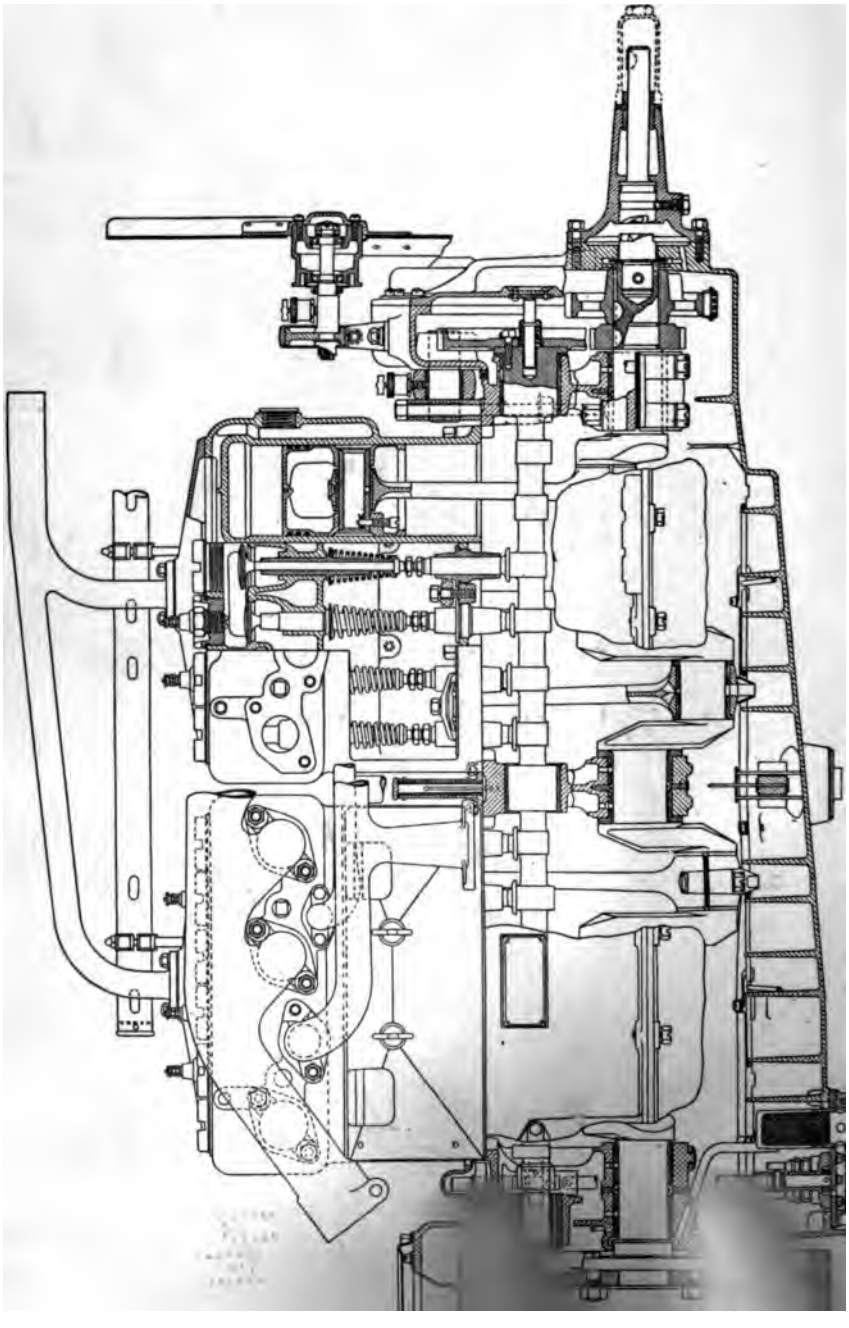

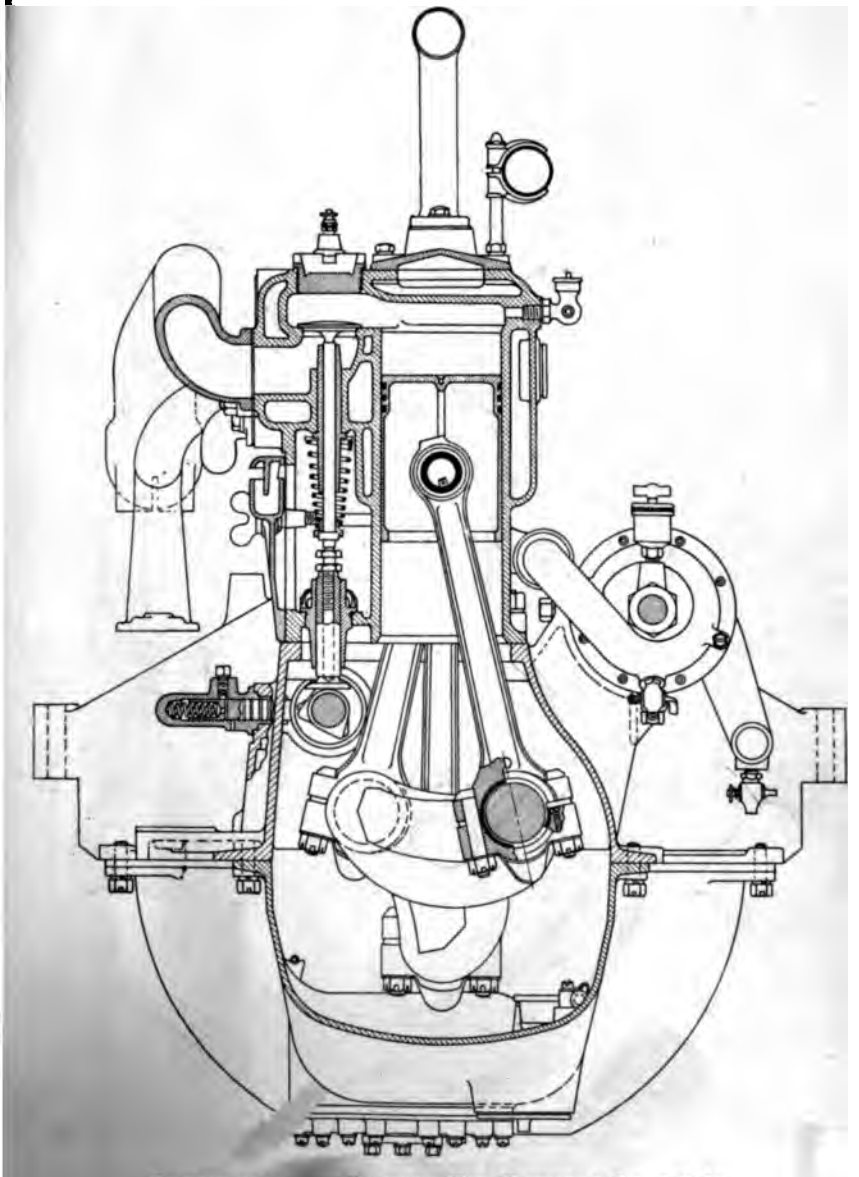

CONTINENTAL [illegible] CYLINDER CAR ENGINE, 3¾ x 5¼ IN.

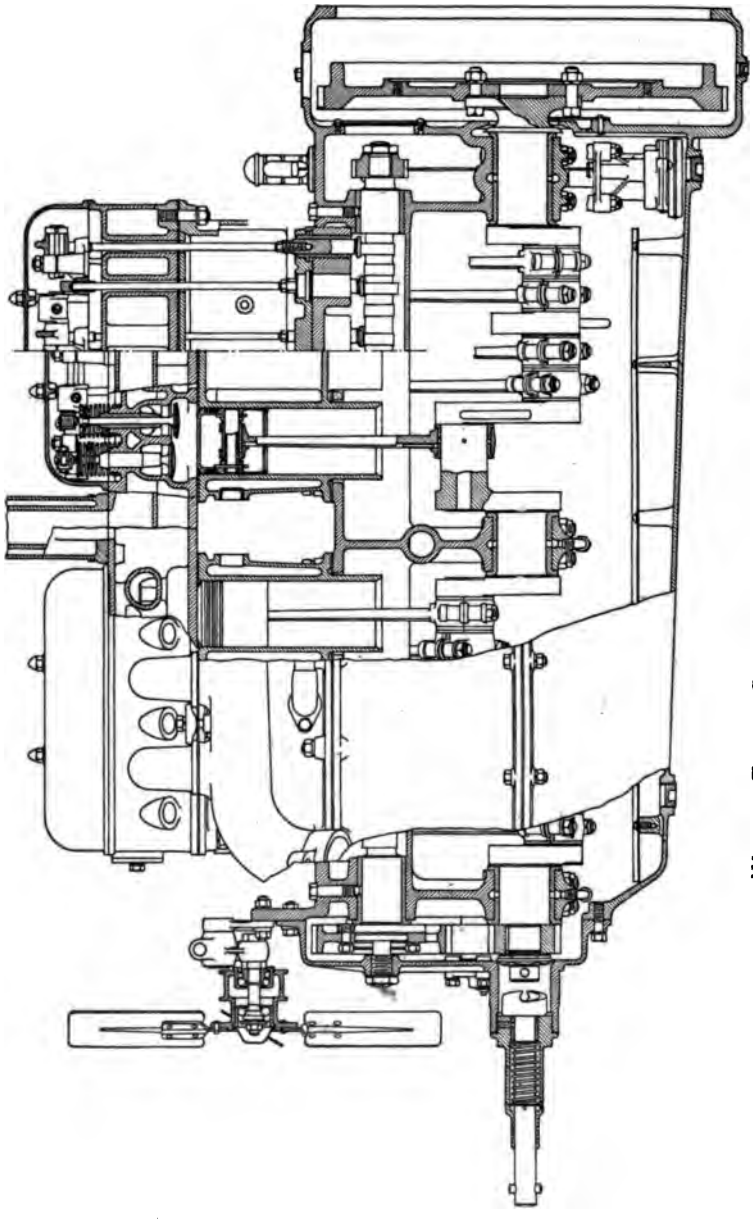

WEIDELY TWELVE CYLINDER CAR ENGINE, 2⅞ × 5 IN.

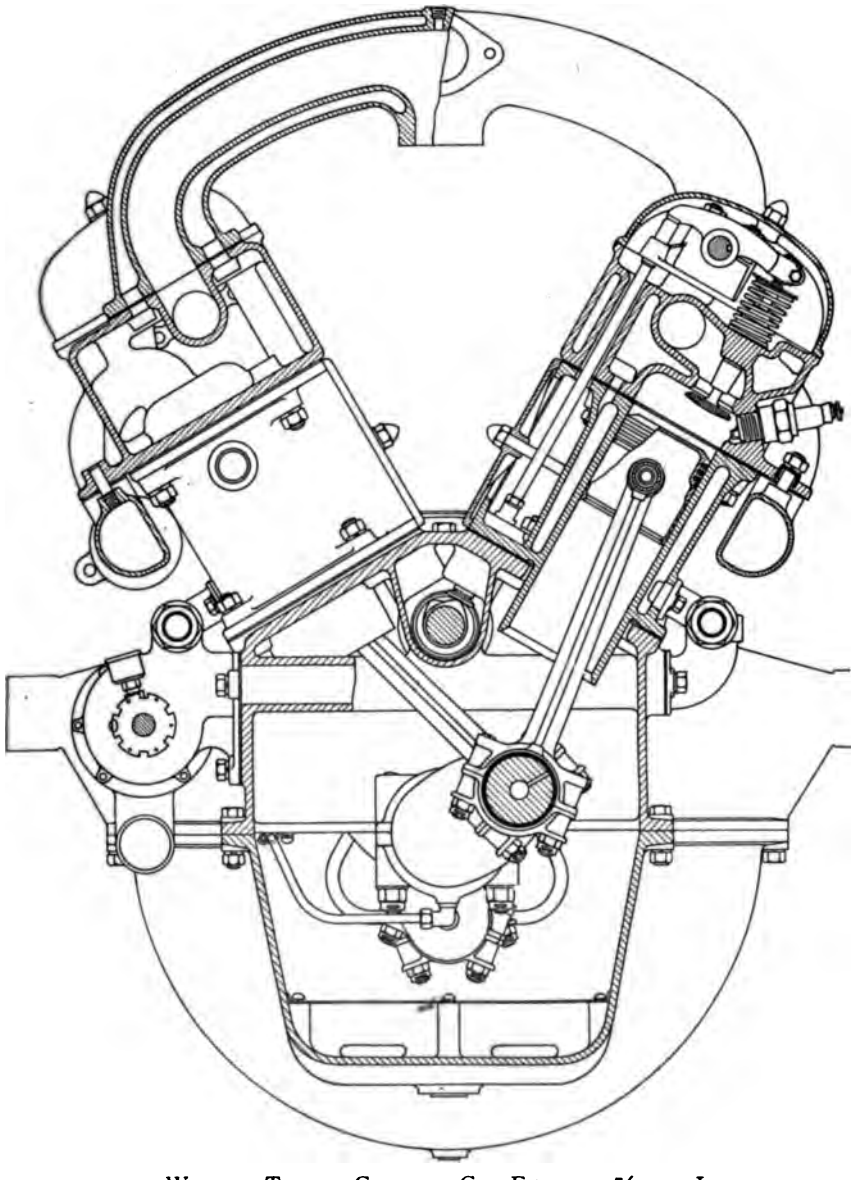

WEIDELY TWELVE CYLINDER CAR ENGINE, 2⅞ x 5 IN.

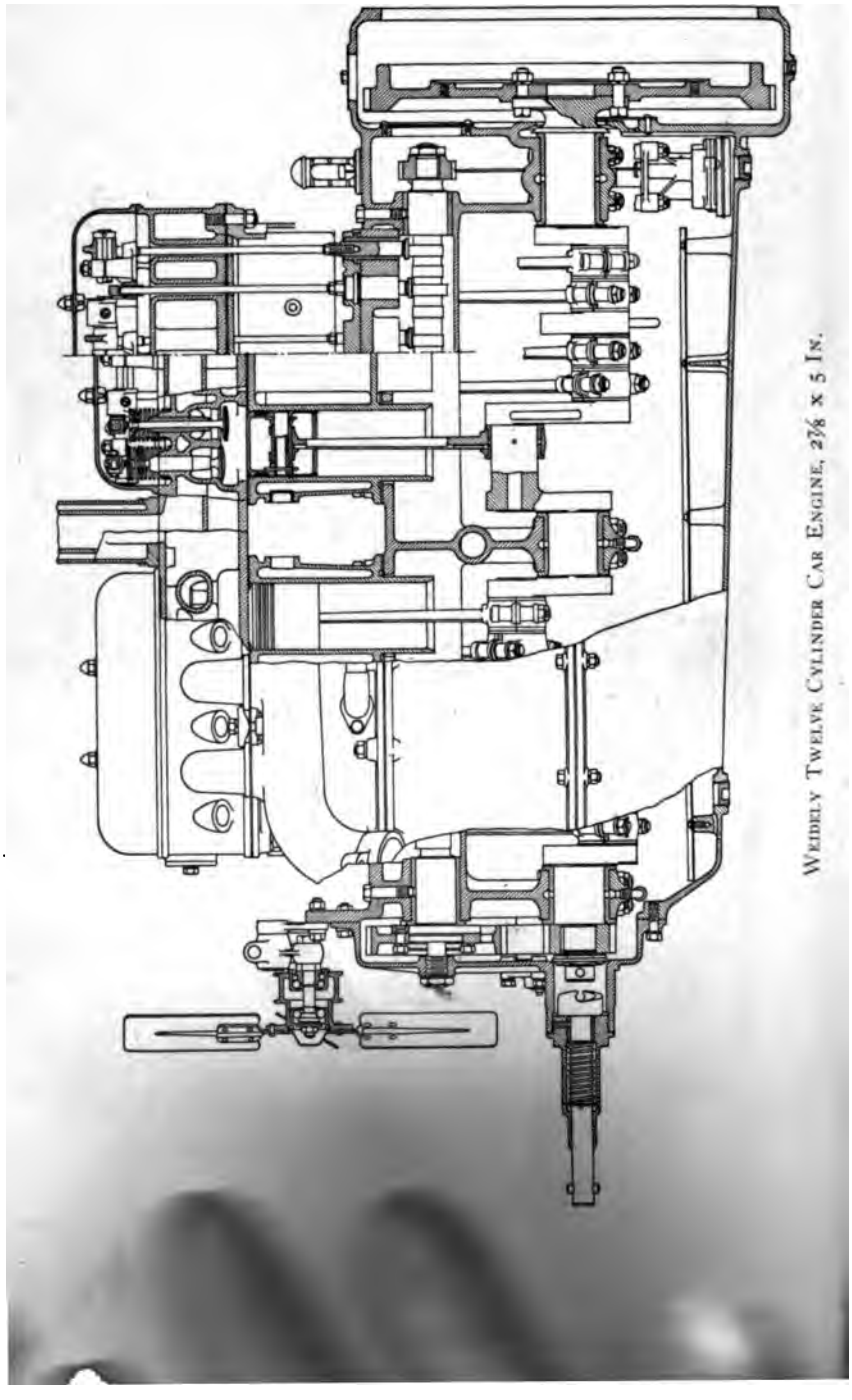

WEIDELY TWELVE CYLINDER CAR ENGINE, 2⅞ × 5 IN.

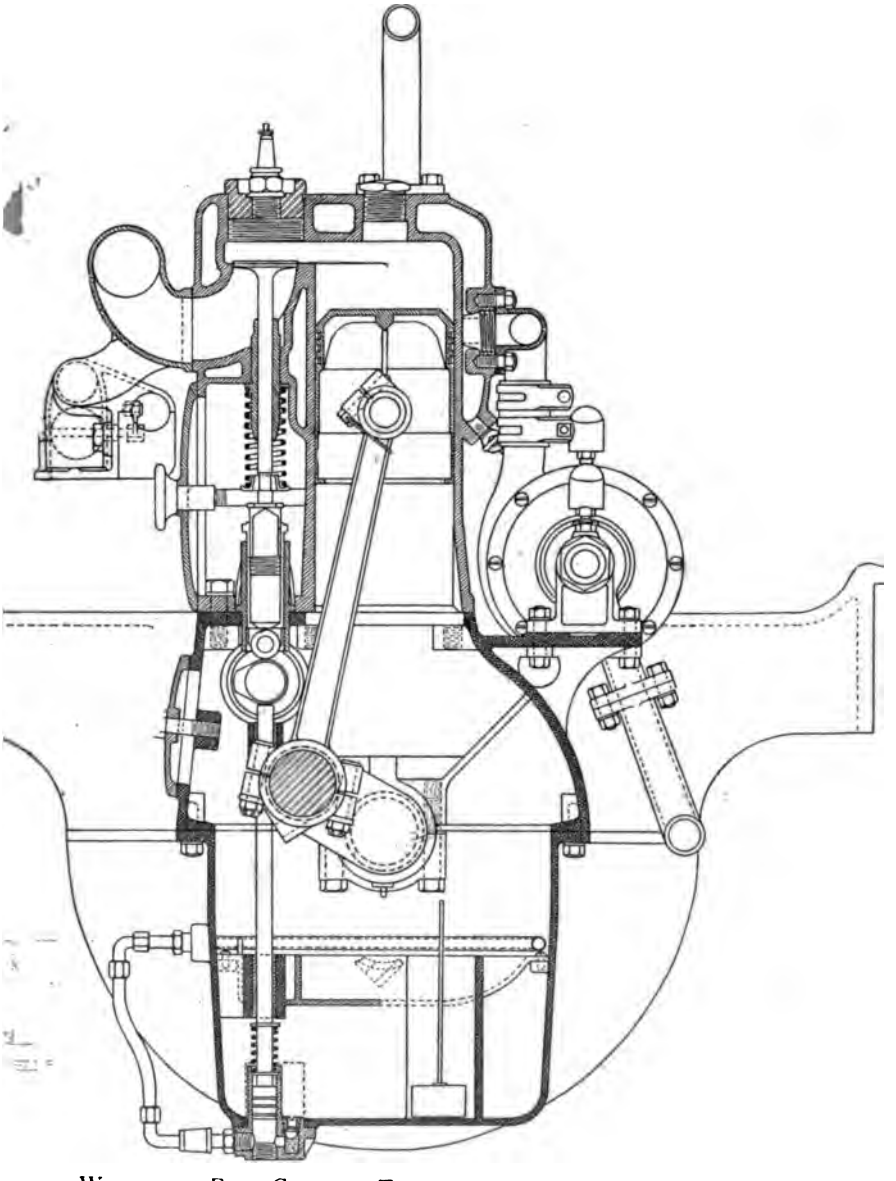

WAUKESHA FOUR CYLINDER TRUCK AND TRACTOR ENGINE, 4¼ x 5¾ IN.

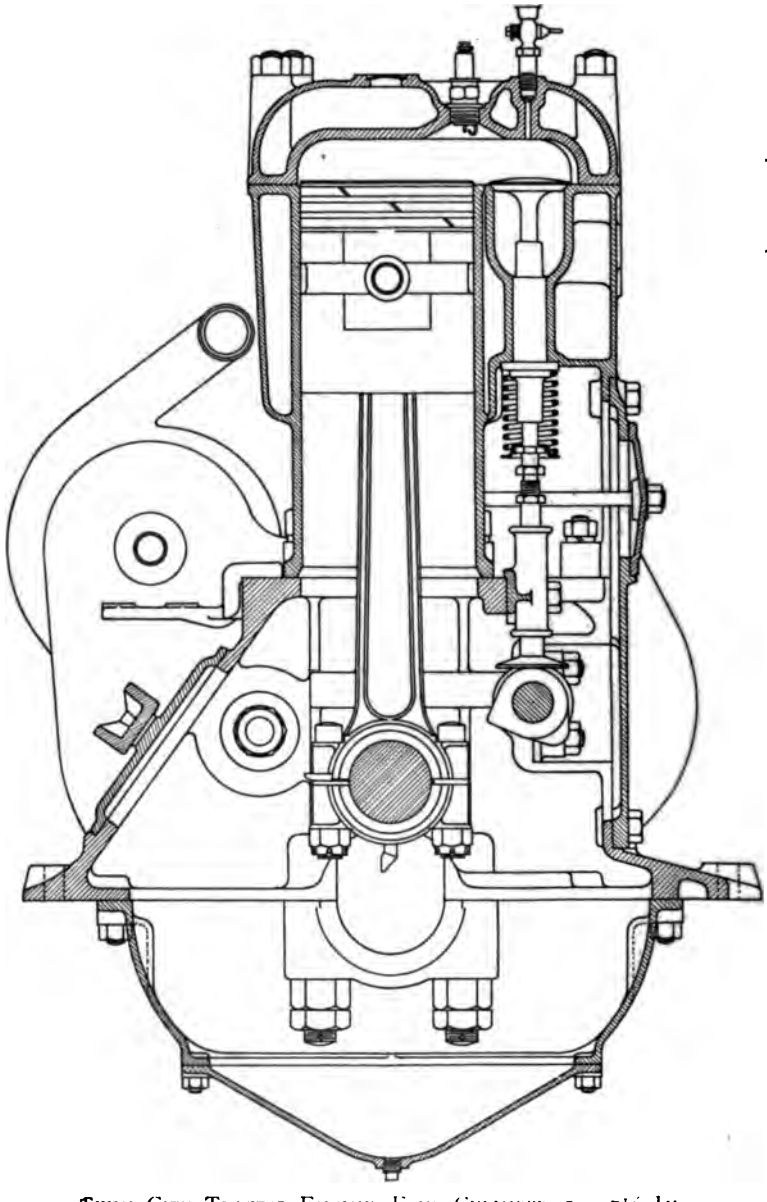

TWIN CITY TRACTOR ENGINE, FOUR CYLINDER, 5 x 7½ IN.

BOUND

JUN 19 1950

UNIV. OF MICH.
LIBRARY